2006 CAMRY SOLARA
ELECTRICAL WIRING DIAGRAM

	Section Code	Page
INTRODUCTION	A	2
HOW TO USE THIS MANUAL	B	3
TROUBLESHOOTING	C	12
ABBREVIATIONS	D	17
GLOSSARY OF TERMS AND SYMBOLS	E	18
RELAY LOCATIONS	F	20
ELECTRICAL WIRING ROUTING	G	40
SYSTEM CIRCUITS	H	62
GROUND POINT	I	292
POWER SOURCE (Current Flow Chart)	J	302
CONNECTOR LIST	K	310
PART NUMBER OF CONNECTORS	L	324
OVERALL ELECTRICAL WIRING DIAGRAM	M	328

A INTRODUCTION

This manual consists of the following 13 sections:

No.	Section	Description
A	INDEX	Index of the contents of this manual.
	INTRODUCTION	Brief explanation of each section.
B	HOW TO USE THIS MANUAL	Instructions on how to use this manual.
C	TROUBLE–SHOOTING	Describes the basic inspection procedures for electrical circuits.
D	ABBREVIATIONS	Defines the abbreviations used in this manual.
E	GLOSSARY OF TERMS AND SYMBOLS	Defines the symbols and functions of major parts.
F	RELAY LOCATIONS	Shows position of the Electronic Control Unit, Relays, Relay Block, etc. This section is closely related to the system circuit.
G	ELECTRICAL WIRING ROUTING	Describes position of Parts Connectors, Splice points, Ground points, etc. This section is closely related to the system circuit.
H	INDEX	Index of the system circuits.
	SYSTEM CIRCUITS	Electrical circuits of each system are shown from the power supply through ground points. Wiring connections and their positions are shown and classified by code according to the connection method. (Refer to the section, ”How to use this manual”). The ”System Outline” and ”Service Hints” useful for troubleshooting are also contained in this section.
I	GROUND POINT	Shows ground positions of all parts described in this manual.
J	POWER SOURCE (Current Flow Chart)	Describes power distribution from the power supply to various electrical loads.
K	CONNECTOR LIST	Describes the form of the connectors for the parts appeared in this book. This section is closely related to the system circuit.
L	PART NUMBER OF CONNECTORS	Indicates the part number of the connectors used in this manual.
M	OVERALL ELECTRICAL WIRING DIAGRAM	Provides circuit diagrams showing the circuit connections.

FOREWORD

This wiring diagram manual has been prepared to provide information on the electrical system of the 2006 CAMRY SOLARA.

Applicable models: MCV31 Series
ACV30 Series

For service specifications and repair procedures of the above models other than those listed in this manual, refer to the following manuals;

Manual Name	Pub. No.
● 2006 CAMRY SOLARA Repair Manual	RM1177U
● 2006 TOYOTA New Car Features	NCF290U

All information in this manual is based on the latest product information at the time of publication. However, specifications and procedures are subject to change without notice.

TOYOTA MOTOR CORPORATION

NOTICE

When handling supplemental restraint system components (removal, installation or inspection, etc.), always follow the direction given in the repair manuals listed above to prevent accidents and supplemental restraint system malfunction.

©2005 TOYOTA MOTOR CORPORATION
All rights reserved. This book may not be reproduced or copied, in whole or in part, without the written permission of Toyota Motor Corporation.
First Printing : Feb. 24, 2005 01–050224–00

This manual provides information on the electrical circuits installed on vehicles by dividing them into a circuit for each system.

The actual wiring of each system circuit is shown from the point where the power source is received from the battery as far as each ground point. (All circuit diagrams are shown with the switches in the OFF position.)

When troubleshooting any problem, first understand the operation of the circuit where the problem was detected (see System Circuit section), the power source supplying power to that circuit (see Power Source section), and the ground points (see Ground Point section). See the System Outline to understand the circuit operation.

When the circuit operation is understood, begin troubleshooting of the problem circuit to isolate the cause. Use Relay Location and Electrical Wiring Routing sections to find each part, junction block and wiring harness connectors, wiring harness and wiring harness connectors and ground points of each system circuit. Internal wiring for each junction block is also provided for better understanding of connection within a junction block.
Wiring related to each system is indicated in each system circuit by arrows (from__, to__). When overall connections are required, see the Overall Electrical Wiring Diagram at the end of this manual.

* The system shown here is an EXAMPLE ONLY. It is different to the actual circuit shown in the SYSTEM CIRCUITS SECTION.

[A]

Stop Light

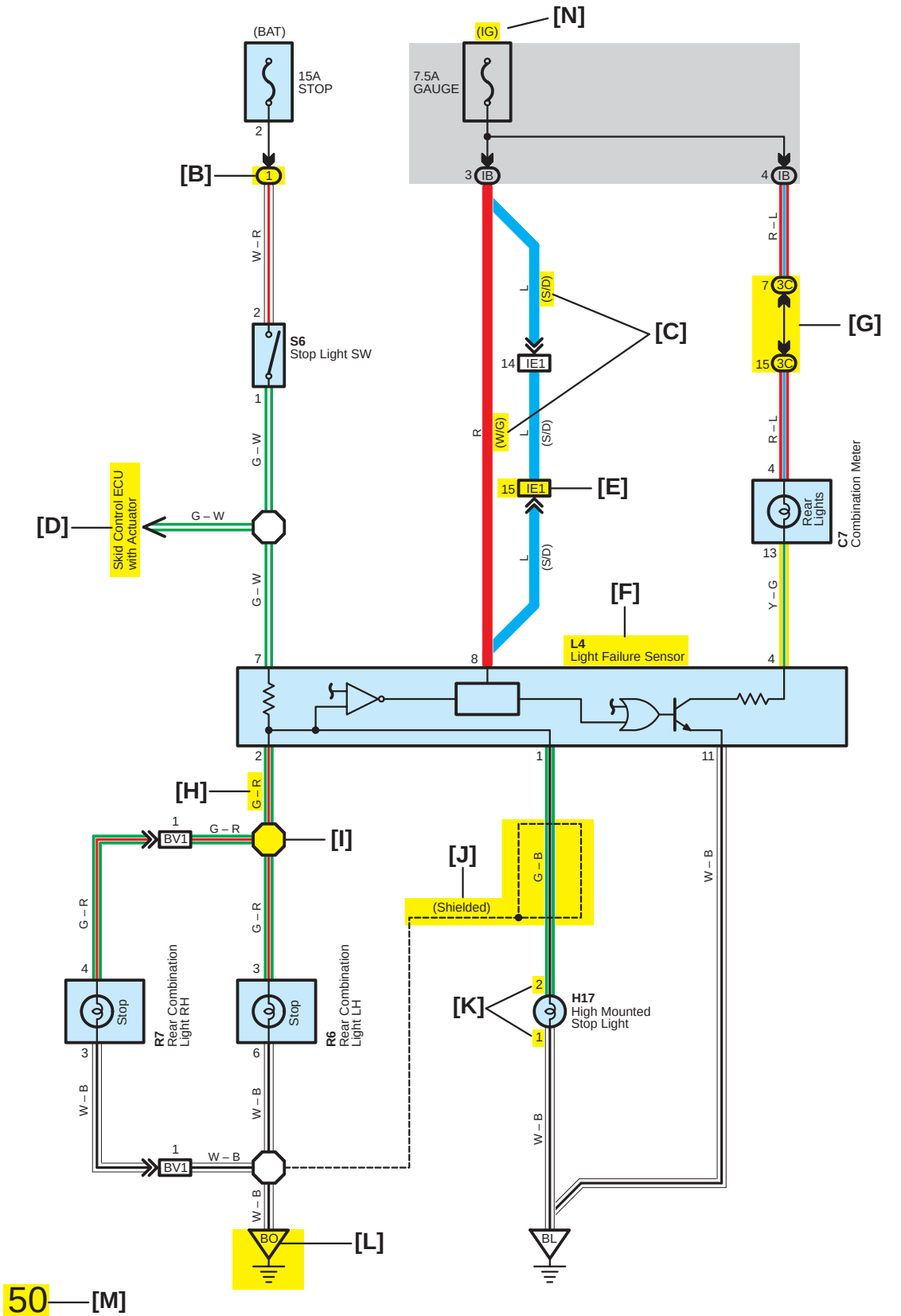

[A] : System Title

[B] : Indicates a Relay Block. No shading is used and only the Relay Block No. is shown to distinguish it from the J/B

Example: (1) Indicates Relay Block No.1

[C] : ( ) is used to indicate different wiring and connector, etc. when the vehicle model, engine type, or specification is different.

[D] : Indicates related system.

[E] : Indicates the wiring harness and wiring harness connector. The wiring harness with male terminal is shown with arrows (⩔).
Outside numerals are pin numbers.

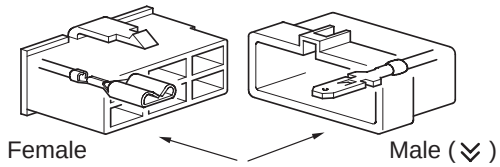

The first letter of the code for each wiring harness and wiring harness connector(s) indicates the component's location, e.g, "E" for the Engine Compartment, "I" for the Instrument Panel and Surrounding area, and "B" for the Body and Surrounding area.

When more than one code has the first and second letters in common, followed by numbers (e.g, IH1, IH2), this indicates the same type of wiring harness and wiring harness connector.

[F] : Represents a part (all parts are shown in sky blue). The code is the same as the code used in parts position.

[G] : Junction Block (The number in the circle is the J/B No. and the connector code is shown beside it). Junction Blocks are shaded to clearly separate them from other parts.

Example:

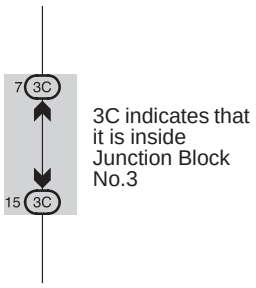

[H] : Indicates the wiring color.

Wire colors are indicated by an alphabetical code.

B = Black	W = White	BR = Brown
L = Blue	V = Violet	SB = Sky Blue
R = Red	G = Green	LG = Light Green
P = Pink	Y = Yellow	GR = Gray
O = Orange		

The first letter indicates the basic wire color and the second letter indicates the color of the stripe.

Example: L – Y

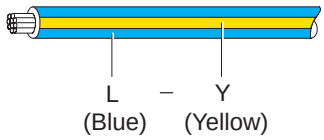

[I] : Indicates a wiring Splice Point

Example:

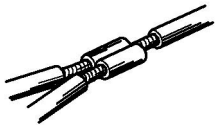

[J] : Indicates a shielded cable.

[K] : Indicates the pin number of the connector.
The numbering system is different for female and male connectors.

Example: Numbered in order from upper left to lower right — Numbered in order from upper right to lower left

Female — Male

[L] : Indicates a ground point.

The first letter of the code for each ground point(s) indicates the component's location, e.g, "E" for the Engine Compartment, "I" for the Instrument Panel and Surrounding area, and "B" for the Body and Surrounding area.

[M] : Page No.

[N] : Indicates the ignition key position(s) when the power is supplied to the fuse(s).

[O] **System Outline**

Current is applied at all times through the STOP fuse to TERMINAL 2 of the stop light SW.
When the ignition SW is turned on, current flows from the GAUGE fuse to TERMINAL 8 of the light failure sensor, and also flows through the rear lights warning light to TERMINAL 4 of the light failure sensor.

Stop Light Disconnection Warning

When the ignition SW is turned on and the brake pedal is pressed (Stop light SW on), if the stop light circuit is open, the current flowing from TERMINAL 7 of the light failure sensor to TERMINALS 1, 2 changes, so the light failure sensor detects the disconnection and the warning circuit of the light failure sensor is activated.
As a result, the current flows from TERMINAL 4 of the light failure sensor to TERMINAL 11 to GROUND and turns the rear lights warning light on. By pressing the brake pedal, the current flowing to TERMINAL 8 of the light failure sensor keeps the warning circuit on and holds the warning light on until the ignition SW is turned off.

[P] **: Parts Location**

Code	See Page	Code	See Page	Code	See Page
C7	34	L4	36	R7	37
H17	36	R6	37	S6	35

[Q] **: Relay Blocks**

Code	See Page	Relay Blocks (Relay Block Location)
1	18	R/B No.1 (Instrument Panel Brace LH)

[R] **: Junction Block and Wire Harness Connector**

Code	See Page	Junction Block and Wire Harness (Connector Location)
3C	22	Instrument Panel Wire and J/B No.3 (Instrument Panel Brace LH)
IB	20	Instrument Panel Wire and Instrument Panel J/B (Lower Finish Panel)

[S] **: Connector Joining Wire Harness and Wire Harness**

Code	See Page	Joining Wire Harness and Wire Harness (Connector Location)
IE1	42	Floor Wire and Instrument Panel Wire (Left Kick Panel)
BV1	50	Luggage Room Wire and Floor Wire (Luggage Room Left)

[T] **: Ground Points**

Code	See Page	Ground Points Location
BL	50	Under the Left Center Pillar
BO	50	Back Panel Center

[O] : Explains the system outline.

[P] : Indicates the reference page showing the position on the vehicle of the parts in the system circuit.

Example : Part ”L4” (Light Failure Sensor) is on page 36 of the manual.
∗ The letter in the code is from the first letter of the part, and the number indicates its order in parts starting with that letter.

Example : L 4
- 4 — Parts is 4th in order
- L — Light Failure Sensor

[Q] : Indicates the reference page showing the position on the vehicle of Relay Block Connectors in the system circuit.

Example : Connector ”1” is described on page 18 of this manual and is installed on the left side of the instrument panel.

[R] : Indicates the reference page showing the position on the vehicle of J/B and Wire Harness in the system circuit.

Example : Connector ”3C” connects the Instrument Panel Wire and J/B No.3. It is described on page 22 of this manual, and is installed on the instrument panel left side.

[S] : Indicates the reference page describing the wiring harness and wiring harness connector (the female wiring harness is shown first, followed by the male wiring harness).

Example : Connector ”IE1” connects the floor wire (female) and Instrument panel wire (male). It is described on page 42 of this manual, and is installed on the left side kick panel.

[T] : Indicates the reference page showing the position of the ground points on the vehicle.

Example : Ground point ”BO” is described on page 50 of this manual and is installed on the back panel center.

The ground points circuit diagram shows the connections from all major parts to the respective ground points. When troubleshooting a faulty ground point, checking the system circuits which use a common ground may help you identify the problem ground quickly. The relationship between ground points (EA, IB and IC shown below) can also be checked this way.

I GROUND POINT

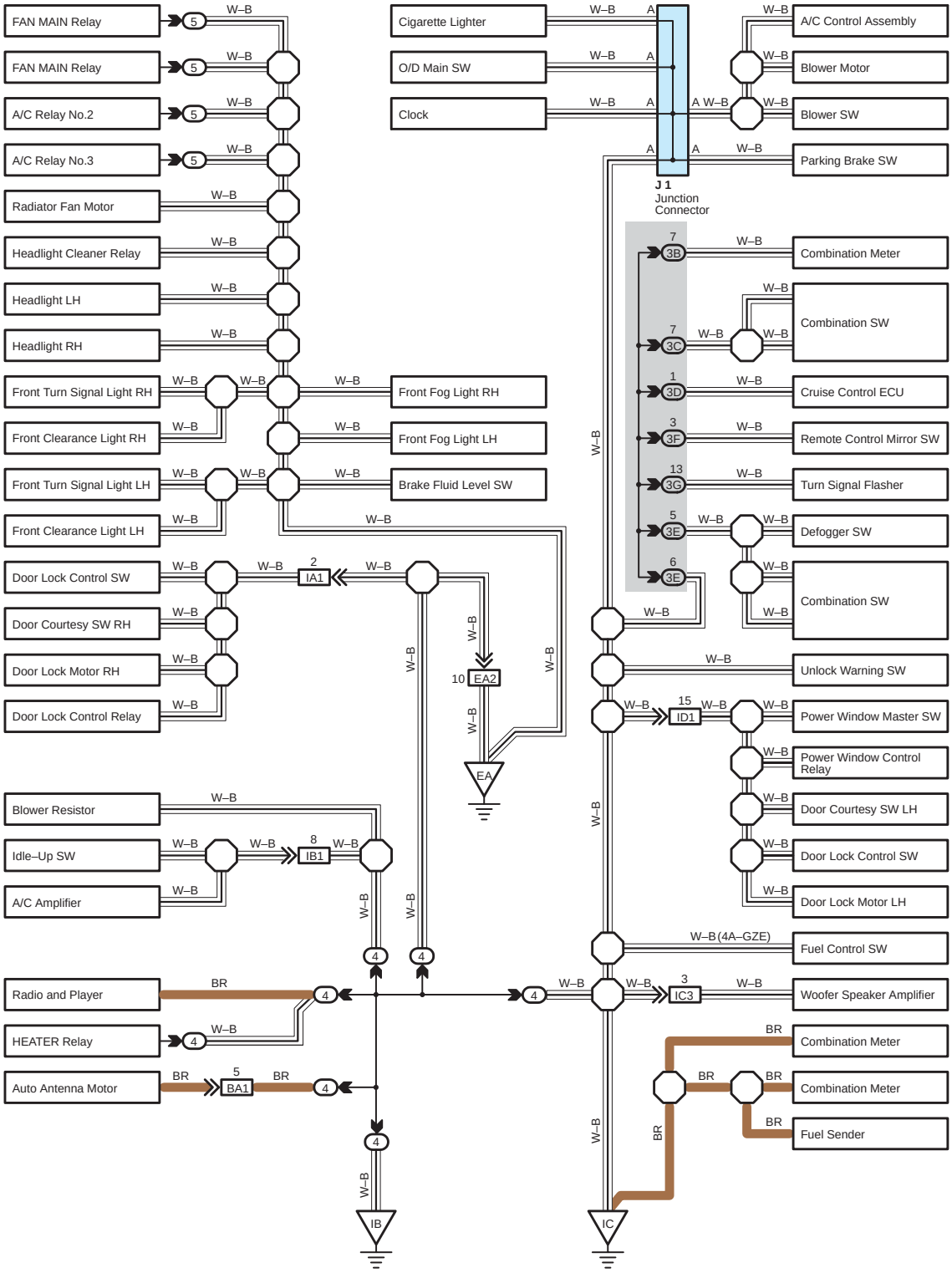

* The system shown here is an EXAMPLE ONLY. It is different to the actual circuit shown in the SYSTEM CIRCUITS SECTION.

The ”Current Flow Chart” section, describes which parts each power source (fuses, fusible links, and circuit breakers) transmits current to. In the Power Source circuit diagram, the conditions when battery power is supplied to each system are explained. Since all System Circuit diagrams start from the power source, the power source system must be fully understood.

J POWER SOURCE (Current Flow Chart)

The chart below shows the route by which current flows from the battery to each electrical source (Fusible Link, Circuit Breaker, Fues, etc.) and other parts

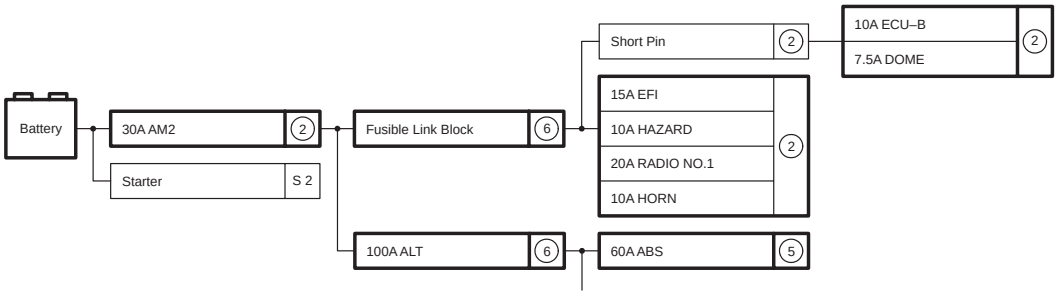

Engine Room R/B (See Page 20)

Fuse		System	Page
20A	STOP	ABS ABS and Traction Control Cruise Control Electronically Controlled Transmission Multiplex Communication System	194 187 180 166 210
10A	DOME	Cigarette Lighter Combination Meter Headlight Interior Light Key Reminder and Seat Belt Warning Light Auto Turn Off System	214 230 112 122

Power Source

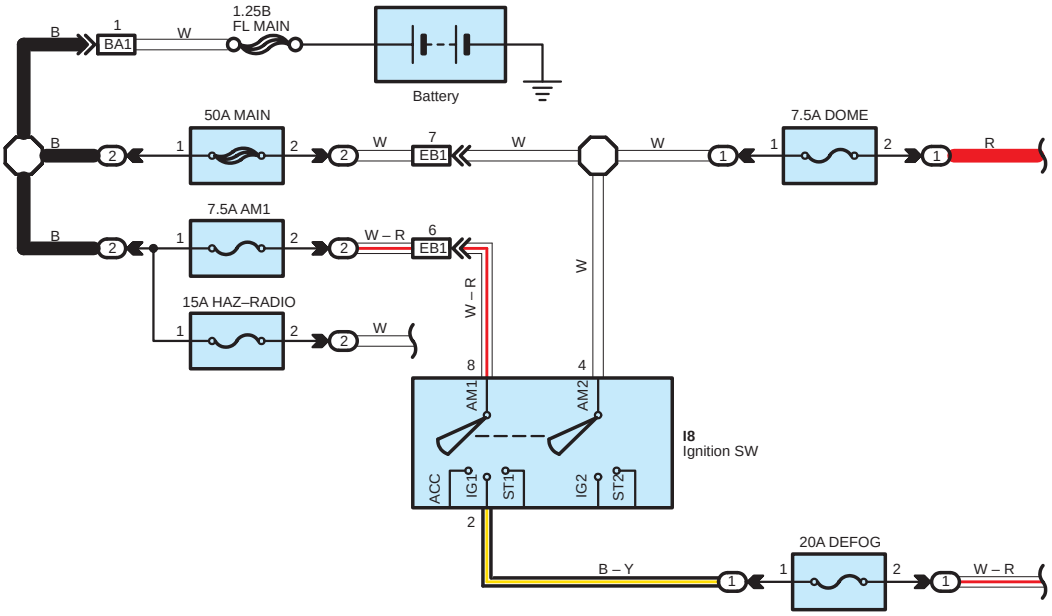

＊ The system shown here is an EXAMPLE ONLY. It is different to the actual circuit shown in the SYSTEM CIRCUITS SECTION.

K CONNECTOR LIST

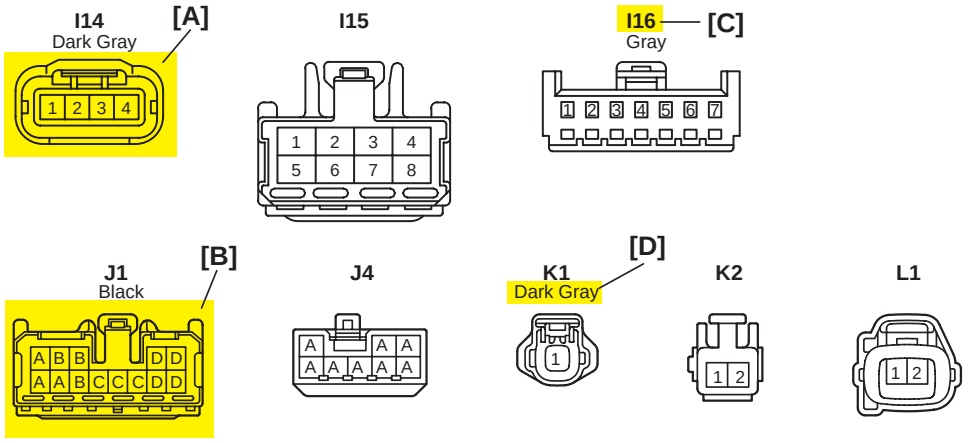

K CONNECTOR LIST

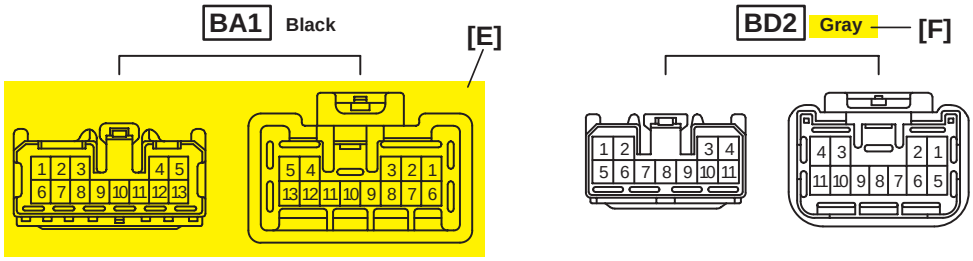

[A] : Indicates connector to be connected to a part. (The numeral indicates the pin No.)

[B] : Junction Connector
Indicates a connector which is connected to a short terminal.

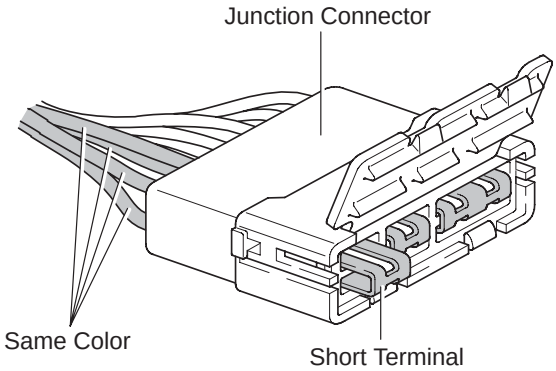

Junction connector in this manual include a short terminal which is connected to a number of wire harnesses. Always perform inspection with the short terminal installed. (When installing the wire harnesses, the harnesses can be connected to any position within the short terminal grouping. Accordingly, in other vehicles, the same position in the short terminal may be connected to a wire harness from a different part.)
Wire harness sharing the same short terminal grouping have the same color.

[C] : Parts Code
The first letter of the code is taken from the first letter of part, and the numbers indicates its order in parts which start with the same letter.

[D] : Connector Color
Connectors not indicated are milky white in color.

[E] : Indicates the connector shapes which are used to join wire harnesses.
On Left : Female connector shapes
On Right : Male connector shapes
Numbers indicate pin numbers.

[F] : Indicates connector colors. (Connectors with not indicated colors are white)

L PART NUMBER OF CONNECTORS

Code	Part Name	Part Number
A 1	A/C Ambient Temp. Sensor	90980–11070
A 2	A/C Condenser Fan Motor	90980–11237
A 3	A/C Condenser Fan Relay	90980–10940
A 4	A/C Condenser Fan Resistor	90980–10928
A 5	A/C Magnetic Clutch	90980–11271
A 6	A/T Oil Temp. Sensor	90980–11413
[A]	[B]	[C]
A 8	ABS Actuator	90980–11009
A 9	ABS Speed Sensor Front LH	90980–10941
A10	ABS Speed Sensor Front RH	90980–11002
A11	Airbag Sensor Front LH	90980–11856
A12	Airbag Sensor Front RH	
A13		90980–11194
		90980–

Code	Part Name	Part Number
D 4	Diode (Courtesy)	90980–11608
D 5	Diode (Interior Light)	90980–10962
D 6	Diode (Moon Roof)	90980–11608
D 7	Door Lock Control Relay	90980–10848
D 8	Door Lock Control SW LH	90980–11148
D 9	Door Lock Control SW RH	
D10	Door Courtesy SW LH	90980–11097
D11	Door Courtesy SW RH	
D12	Door Courtesy SW Front LH	90980–11156
D13	Door Courtesy SW Front RH	
D14	Door Courtesy SW Rear LH	
D15	Door Courtesy SW Rear RH	
D16	and Unlock SW LH	90980–11170
	RH	

[A] : Part Code

[B] : Part Name

[C] : Part Number
Toyota Part Number are indicated.

Not all of the above part numbers of the connector are established for the supply.

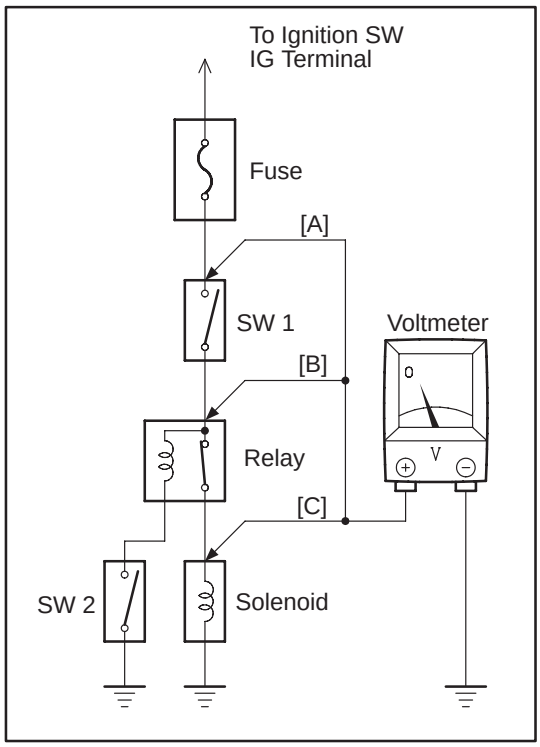

VOLTAGE CHECK

(a) Establish conditions in which voltage is present at the check point.

Example:
[A] – Ignition SW on
[B] – Ignition SW and SW 1 on
[C] – Ignition SW, SW 1 and Relay on (SW 2 off)

(b) Using a voltmeter, connect the negative lead to a good ground point or negative battery terminal, and the positive lead to the connector or component terminal.
This check can be done with a test light instead of a voltmeter.

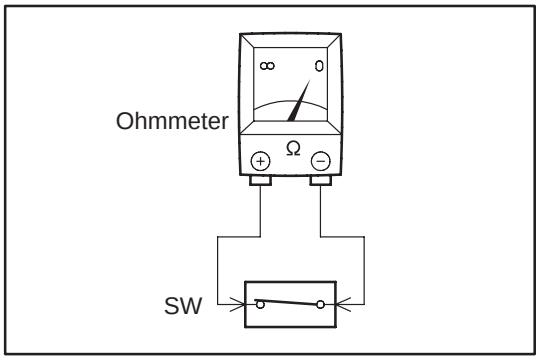

CONTINUITY AND RESISTANCE CHECK

(a) Disconnect the battery terminal or wire so there is no voltage between the check points.

(b) Contact the two leads of an ohmmeter to each of the check points.

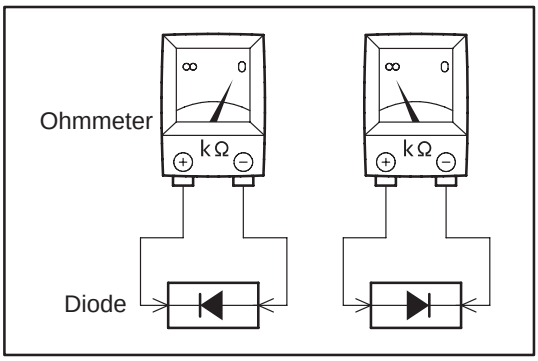

If the circuit has diodes, reverse the two leads and check again.
When contacting the negative lead to the diode positive side and the positive lead to the negative side, there should be continuity.
When contacting the two leads in reverse, there should be no continuity.

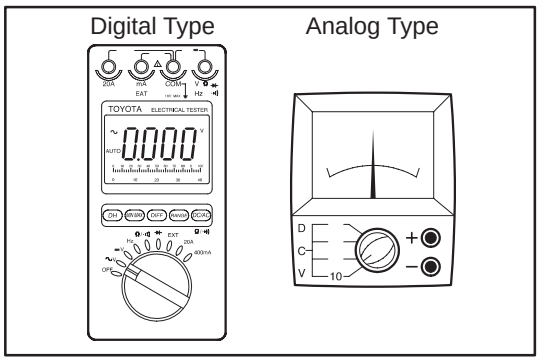

(c) Use a volt/ohmmeter with high impedance (10 kΩ/V minimum) for troubleshooting of the electrical circuit.

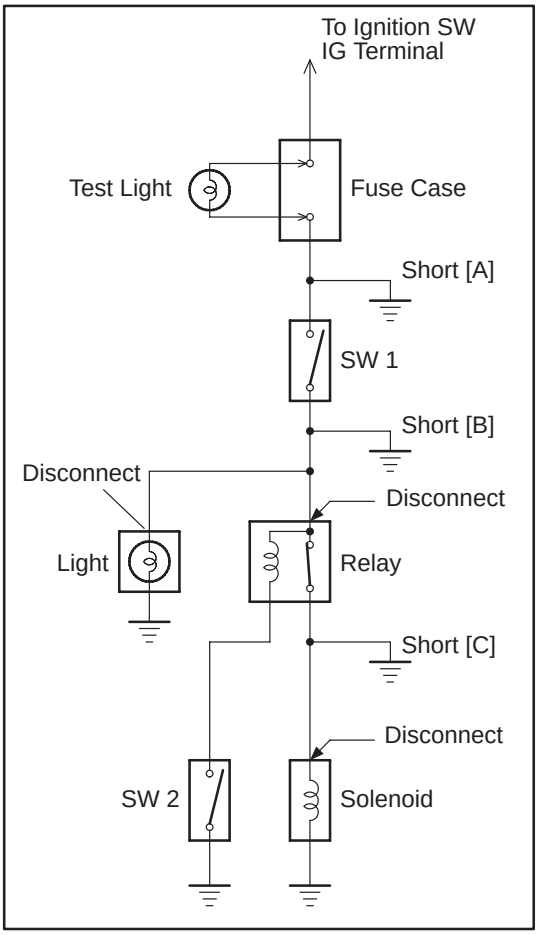

FINDING A SHORT CIRCUIT

(a) Remove the blown fuse and disconnect all loads of the fuse.

(b) Connect a test light in place of the fuse.

(c) Establish conditions in which the test light comes on.

Example:
[A] – Ignition SW on
[B] – Ignition SW and SW 1 on
[C] – Ignition SW, SW 1 and Relay on (Connect the Relay) and SW 2 off (or Disconnect SW 2)

(d) Disconnect and reconnect the connectors while watching the test light.
The short lies between the connector where the test light stays lit and the connector where the light goes out.

(e) Find the exact location of the short by lightly shaking the problem wire along the body.

CAUTION:

(a) Do not open the cover or the case of the ECU unless absolutely necessary. (If the IC terminals are touched, the IC may be destroyed by static electricity.)

(b) When replacing the internal mechanism (ECU part) of the digital meter, be careful that no part of your body or clothing comes in contact with the terminals of leads from the IC, etc. of the replacement part (spare part).

DISCONNECTION OF MALE AND FEMALE CONNECTORS

To pull apart the connectors, pull on the connector itself, not the wire harness.

HINT : Check to see what kind of connector you are disconnecting before pulling apart.

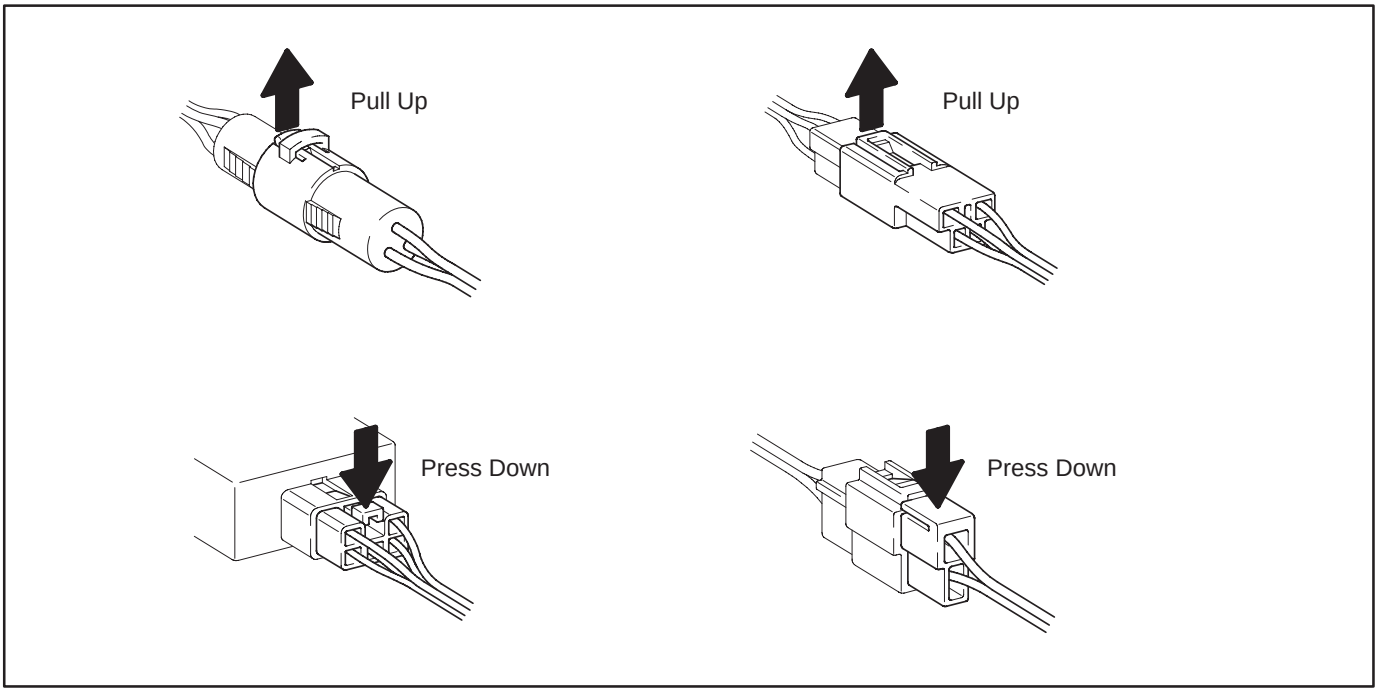

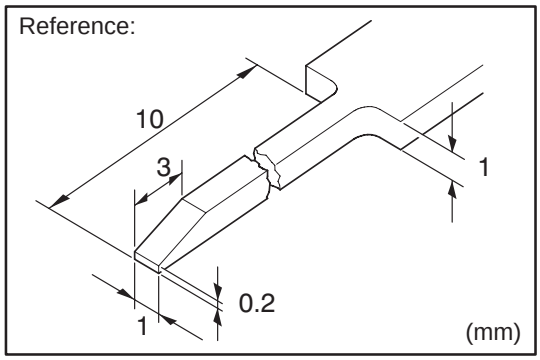

HOW TO REPLACE TERMINAL (with terminal retainer or secondary locking device)

1. PREPARE THE SPECIAL TOOL

   HINT : To remove the terminal from the connector, please construct and use the special tool or like object shown on the left.

2. DISCONNECT CONNECTOR

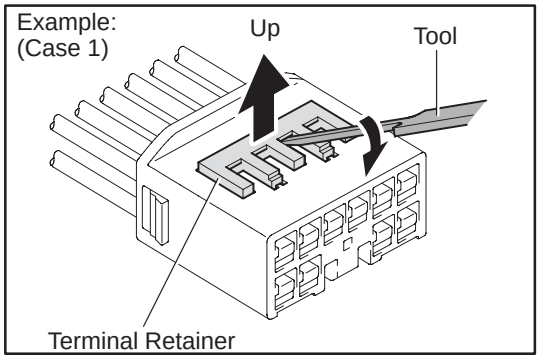

3. DISENGAGE THE SECONDARY LOCKING DEVICE OR TERMINAL RETAINER.

   (a) Locking device must be disengaged before the terminal locking clip can be released and the terminal removed from the connector.

   (b) Use a special tool or the terminal pick to unlock the secondary locking device or terminal retainer.

   NOTICE:
   Do not remove the terminal retainer from connector body.

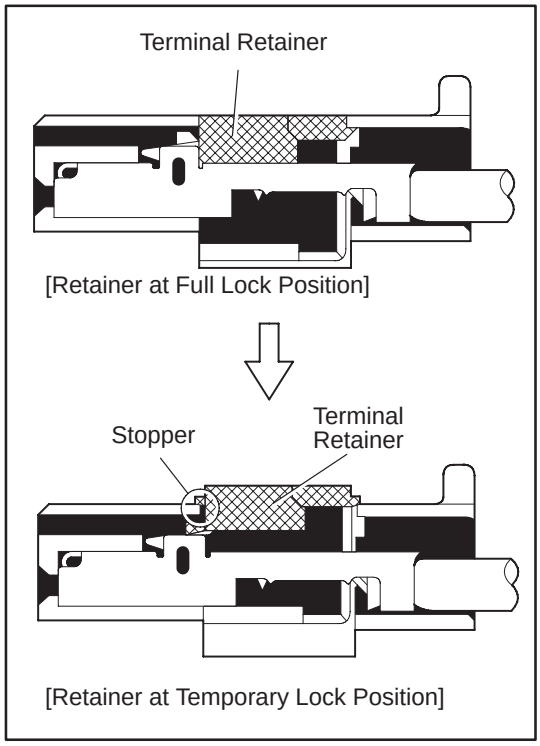

[A] For Non–Waterproof Type Connector

HINT : The needle insertion position varies according to the connector's shape (number of terminals etc.), so check the position before inserting it.

"Case 1"

Raise the terminal retainer up to the temporary lock position.

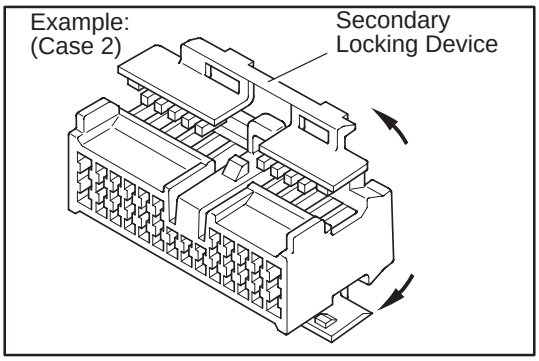

"Case 2"

Open the secondary locking device.

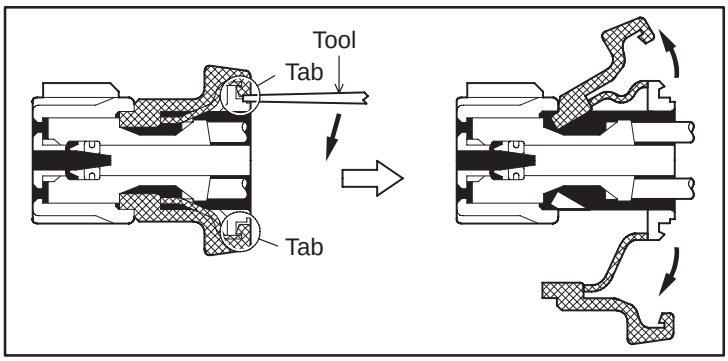

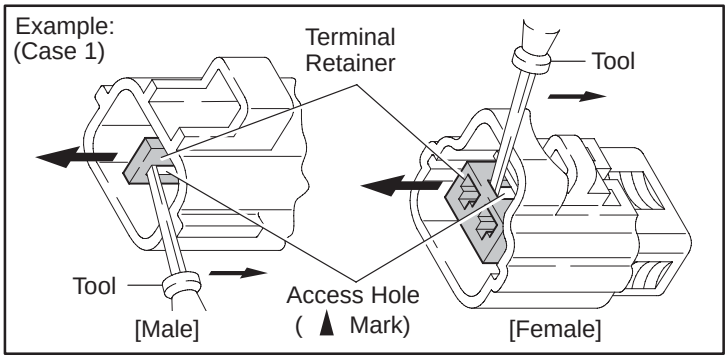

[B] For Waterproof Type Connector

HINT : Terminal retainer color is different according to connector body.

Example:

Terminal Retainer	: Connector Body
Black or White	: Gray
Black or White	: Dark Gray
Gray or White	: Black

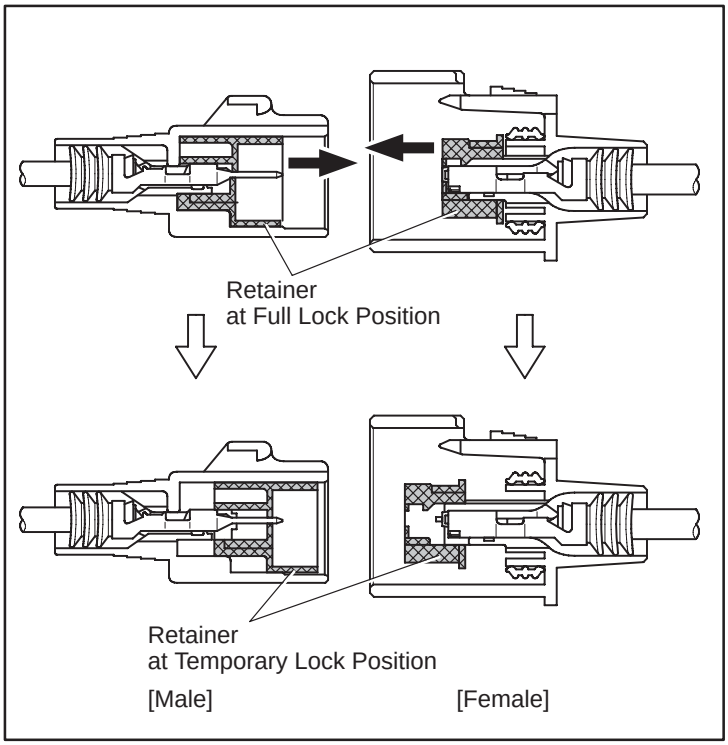

”Case 1”

Type where terminal retainer is pulled up to the temporary lock position (Pull Type).

Insert the special tool into the terminal retainer access hole (▲Mark) and pull the terminal retainer up to the temporary lock position.

HINT : The needle insertion position varies according to the connector’s shape (Number of terminals etc.), so check the position before inserting it.

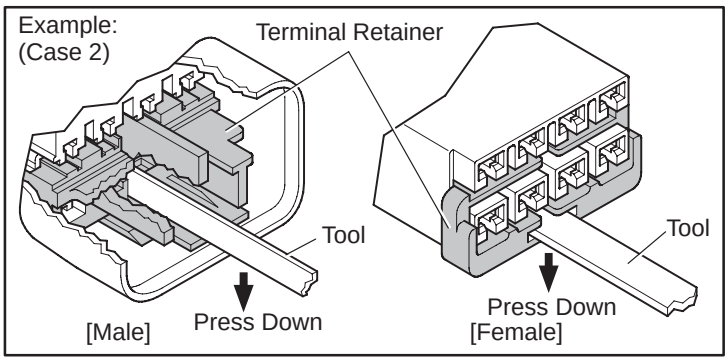

”Case 2”

Type which cannot be pulled as far as Power Lock insert the tool straight into the access hole of terminal retainer as shown.

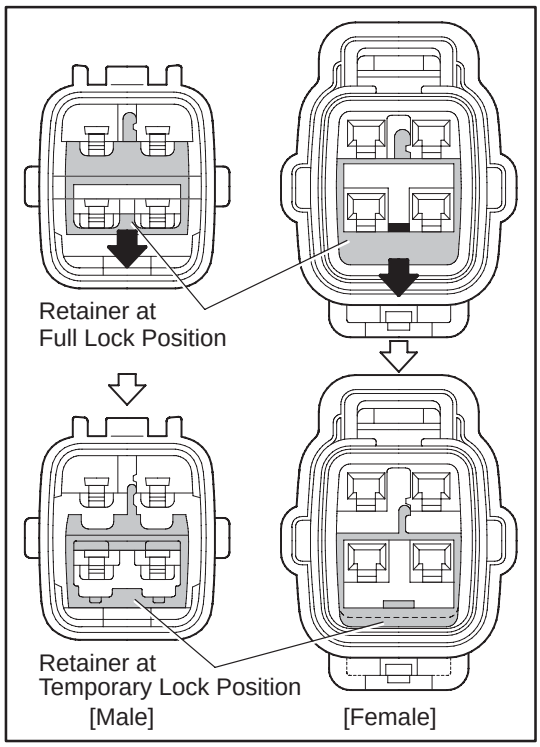

Push the terminal retainer down to the temporary lock position.

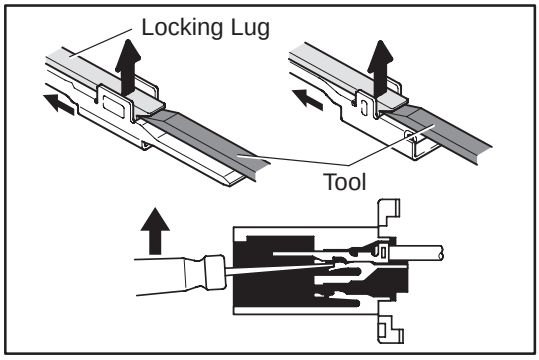

(c) Release the locking lug from terminal and pull the terminal out from rear.

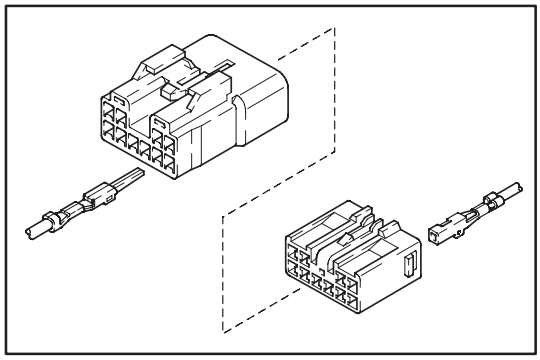

4. INSTALL TERMINAL TO CONNECTOR

(a) Insert the terminal.

HINT:
1. Make sure the terminal is positioned correctly.
2. Insert the terminal until the locking lug locks firmly.
3. Insert the terminal with terminal retainer in the temporary lock position.

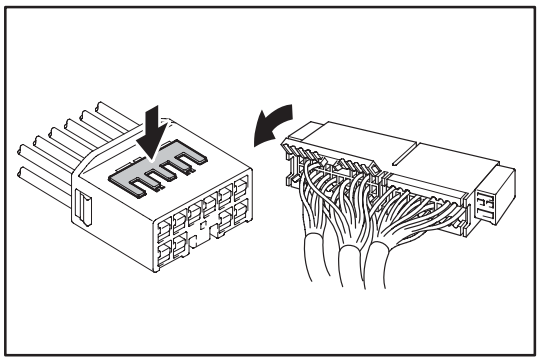

(b) Push the secondary locking device or terminal retainer in to the full lock position.

5. CONNECT CONNECTOR

ABBREVIATIONS

The following abbreviations are used in this manual.

A/C	=	Air Conditioning
A/T	=	Automatic Transaxle
ABS	=	Anti–Lock Brake System
ACIS	=	Acoustic Control Induction System
ACM	=	Active Control Engine Mount
AICV	=	Air Intake Control Valve
BEAN	=	Body Electronics Area Network
C/P	=	Coupe Type
CAN	=	Controller Area Network
EC	=	Electrochromic
ECU	=	Electronic Control Unit
ESA	=	Electronic Spark Advance
EVAP	=	Evaporative Emission
IC	=	Integrated Circuit
INT	=	Intermittent
J/B	=	Junction Block
LCD	=	Liquid Crystal Display
LH	=	Left–Hand
M/T	=	Manual Transaxle
R/B	=	Relay Block
RH	=	Right–Hand
SFI	=	Sequential Multiport Fuel Injection
SRS	=	Supplemental Restraint System
SW	=	Switch
TEMP.	=	Temperature
TRAC	=	Traction Control
TVIP	=	TOYOTA Vehicle Intrusion Protection
VSC	=	Vehicle Stability Control
VSV	=	Vacuum Switching Valve
VVT	=	Variable Valve Timing
w/	=	With
w/o	=	Without

∗ The titles given inside the components are the names of the terminals (terminal codes) and are not treated as being abbreviations.

E GLOSSARY OF TERMS AND SYMBOLS

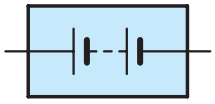

BATTERY
Stores chemical energy and converts it into electrical energy. Provides DC current for the auto's various electrical circuits.

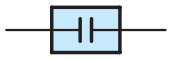

CAPACITOR (Condenser)
A small holding unit for temporary storage of electrical voltage.

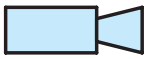

CIGARETTE LIGHTER
An electric resistance heating element.

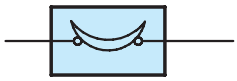

CIRCUIT BREAKER
Basically a reusable fuse, a circuit breaker will heat and open if too much current flows through it. Some units automatically reset when cool, others must be manually reset.

DIODE
A semiconductor which allows current flow in only one direction.

DIODE, ZENER
A diode which allows current flow in one direction but blocks reverse flow only up to a specific voltage. Above that potential, it passes the excess voltage. This acts as a simple voltage regulator.

PHOTODIODE
The photodiode is a semiconductor which controls the current flow according to the amount of light.

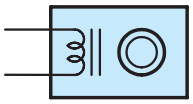

DISTRIBUTOR, IIA
Channels high–voltage current from the ignition coil to the individual spark plugs.

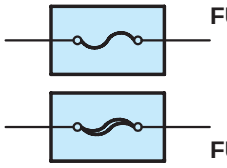

(for Medium Current Fuse)

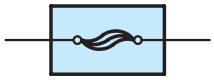

(for High Current Fuse or Fusible Link)

FUSE
A thin metal strip which burns through when too much current flows through it, thereby stopping current flow and protecting a circuit from damage.

FUSIBLE LINK
A heavy–gauge wire placed in high amperage circuits which burns through on overloads, thereby protecting the circuit. The numbers indicate the crosssection surface area of the wires.

1. SINGLE FILAMENT

2. DOUBLE FILAMENT

HEADLIGHTS
Current flow causes a headlight filament to heat up and emit light. A headlight may have either a single (1) filament or a double (2) filament

HORN
An electric device which sounds a loud audible signal.

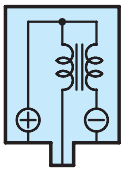

IGNITION COIL
Converts low–voltage DC current into high–voltage ignition current for firing the spark plugs.

LIGHT
Current flow through a filament causes the filament to heat up and emit light.

LED (LIGHT EMITTING DIODE)
Upon current flow, these diodes emit light without producing the heat of a comparable light.

METER, ANALOG
Current flow activates a magnetic coil which causes a needle to move, thereby providing a relative display against a background calibration.

METER, DIGITAL
Current flow activates one or many LED's, LCD's, or fluorescent displays, which provide a relative or digital display.

MOTOR
A power unit which converts electrical energy into mechanical energy, especially rotary motion.

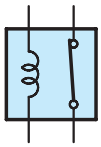

RELAY

1. NORMALLY CLOSED

Basically, an electrically operated switch which may be normally closed (1) or open (2).
Current flow through a small coil creates a magnetic field which either opens or closes an attached switch.

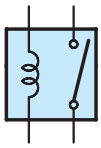

2. NORMALLY OPEN

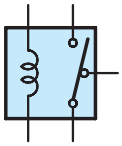

RELAY, DOUBLE THROW

A relay which passes current through one set of contacts or the other.

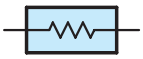

RESISTOR

An electrical component with a fixed resistance, placed in a circuit to reduce voltage to a specific value.

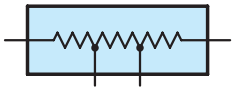

RESISTOR, TAPPED

A resistor which supplies two or more different non adjustable resistance values.

RESISTOR, VARIABLE or RHEOSTAT

A controllable resistor with a variable rate of resistance.
Also called a potentiometer or rheostat.

SENSOR (Thermistor)

A resistor which varies its resistance with temperature.

(Reed Switch Type)

SENSOR, SPEED

Uses magnetic impulses to open and close a switch to create a signal for activation of other components.

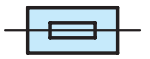

SHORT PIN

Used to provide an unbroken connection within a junction block.

SOLENOID

An electromagnetic coil which forms a magnetic field when current flows, to move a plunger, etc.

SPEAKER

An electromechanical device which creates sound waves from current flow.

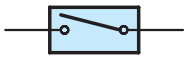

SWITCH, MANUAL

1. NORMALLY OPEN

Opens and closes circuits, thereby stopping (1) or allowing (2) current flow.

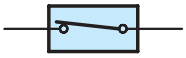

2. NORMALLY CLOSED

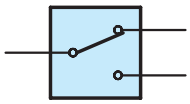

SWITCH, DOUBLE THROW

A switch which continuously passes current through one set of contacts or the other.

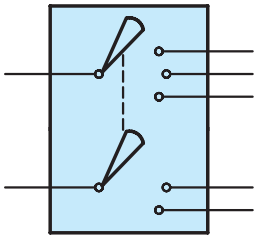

SWITCH, IGNITION

A key operated switch with several positions which allows various circuits, particularly the primary ignition circuit, to become operational.

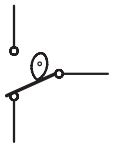

SWITCH, WIPER PARK

Automatically returns wipers to the stop position when the wiper switch is turned off.

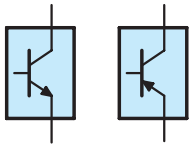

TRANSISTOR

A solidstate device typically used as an electronic relay; stops or passes current depending on the voltage applied at ”base”.

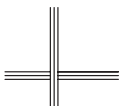

WIRES

(1) NOT CONNECTED

Wires are always drawn as straight lines on wiring diagrams.
Crossed wires (1) without a black dot at the junction are not joined;
crossed wires (2) with a black dot or octagonal (⬡) mark at the junction are spliced (joined) connections.

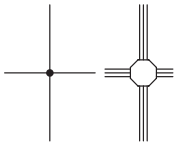

(2) SPLICED

[Engine Compartment]

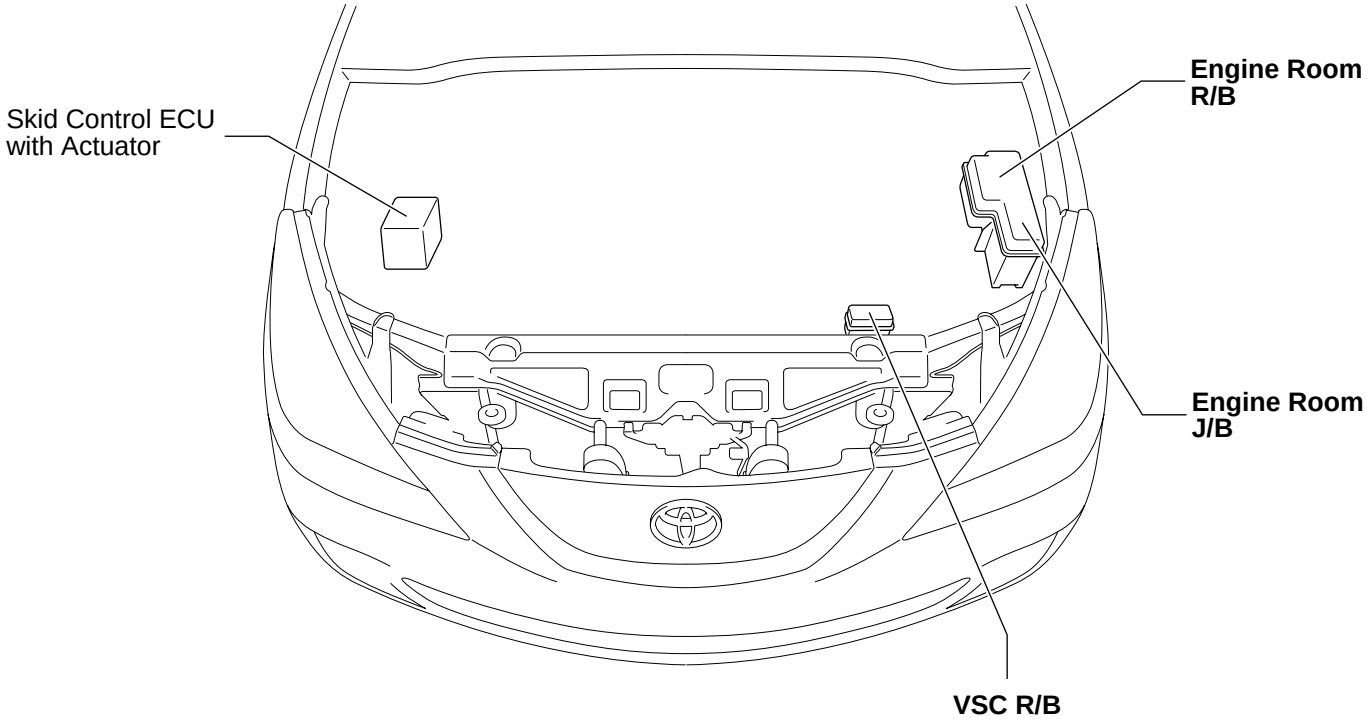

[Instrument Panel]

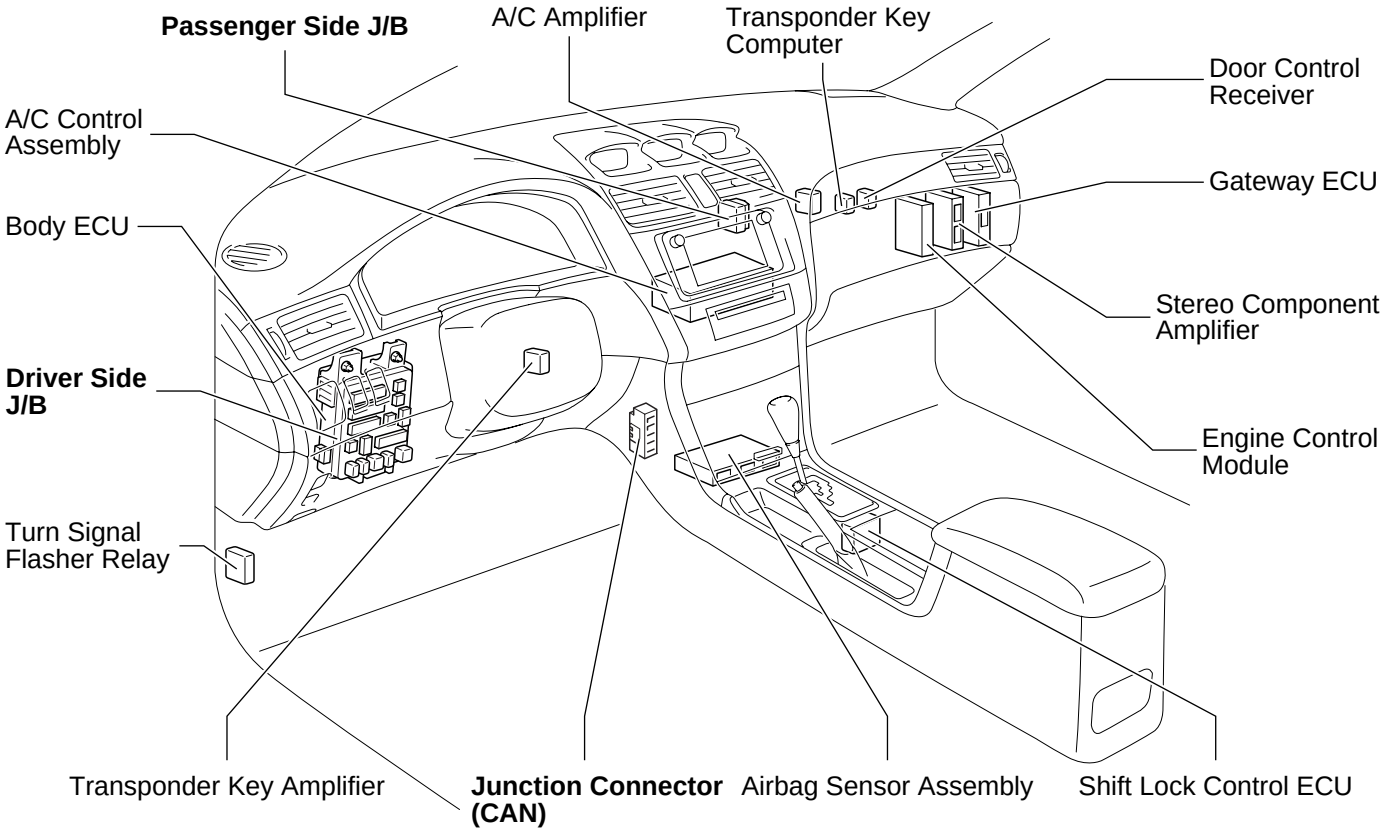

[Body]
(C/P)

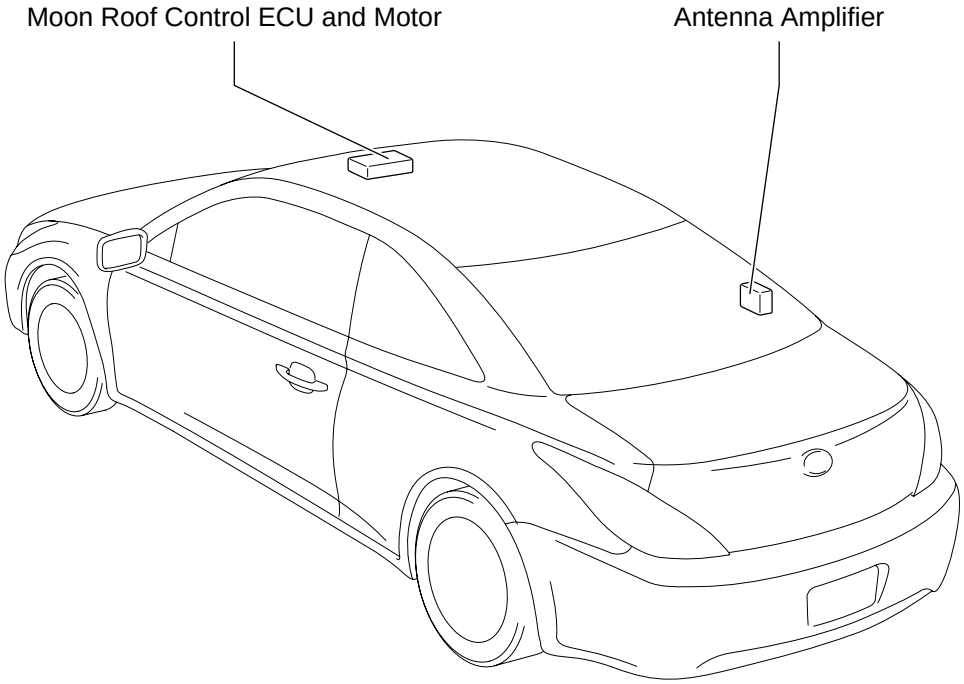

(Convertible)

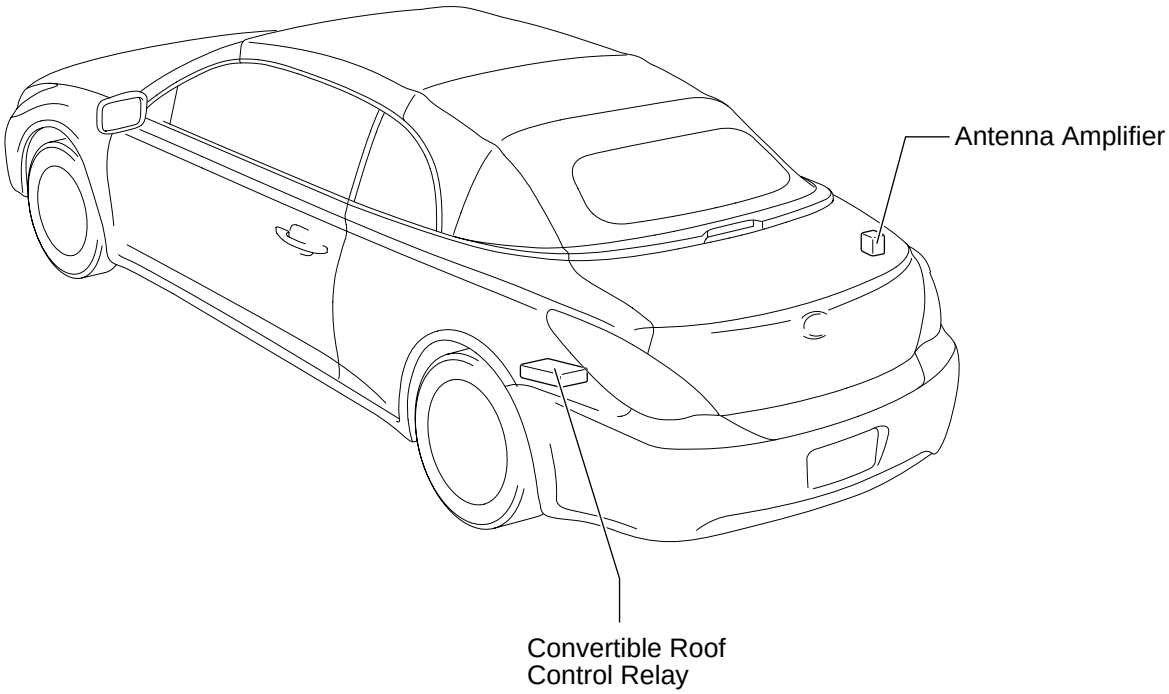

[Seat]

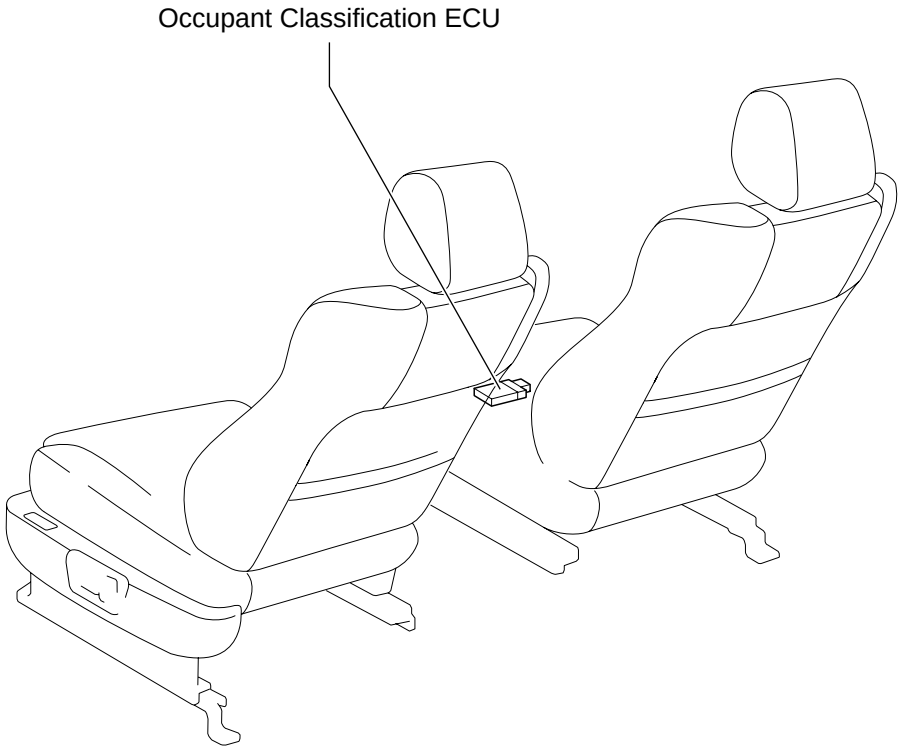

F RELAY LOCATIONS

① : Engine Room R/B	Engine Compartment Left (See Page 20)

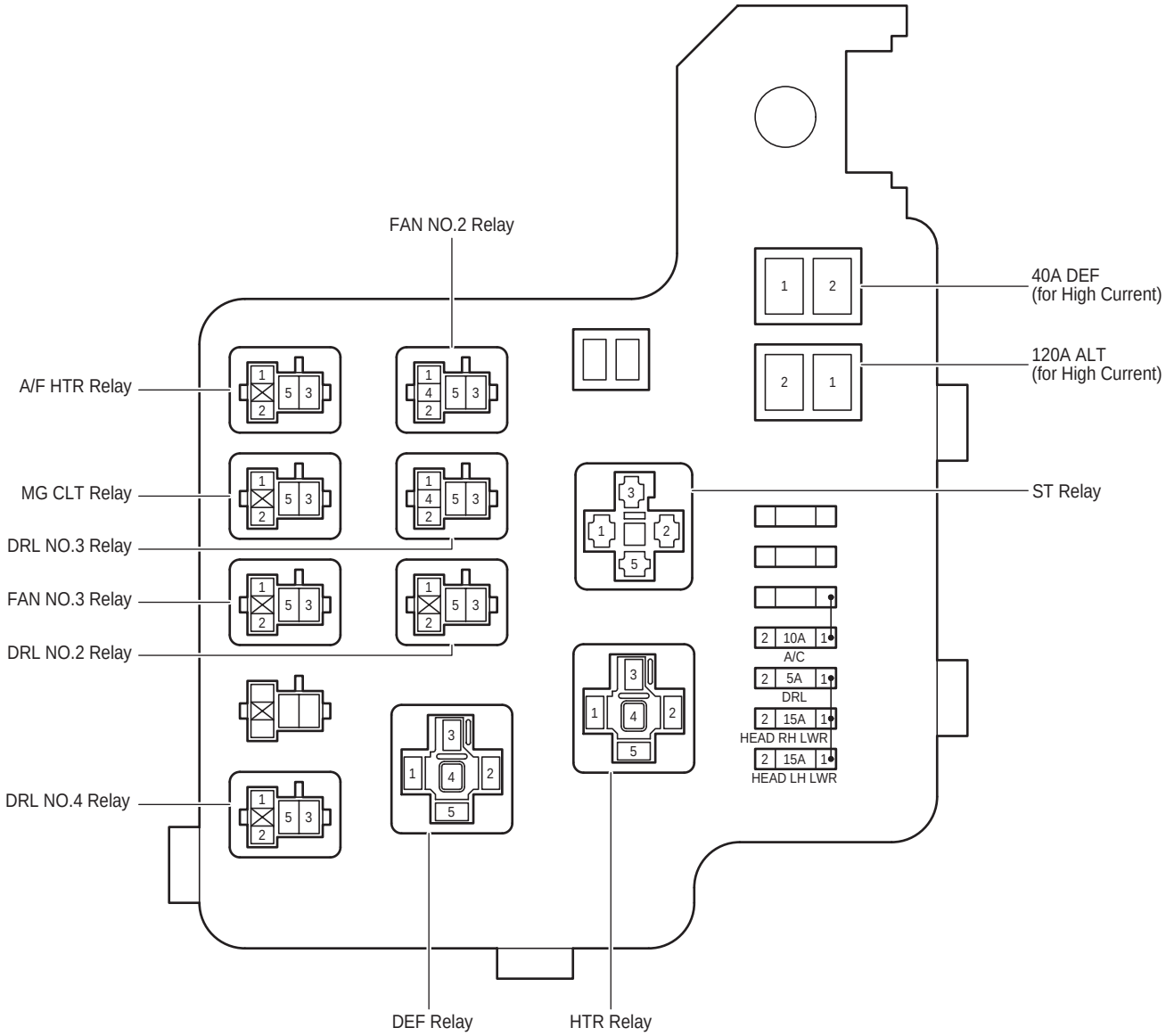

② : VSC R/B	Engine Compartment Left (See Page 20)

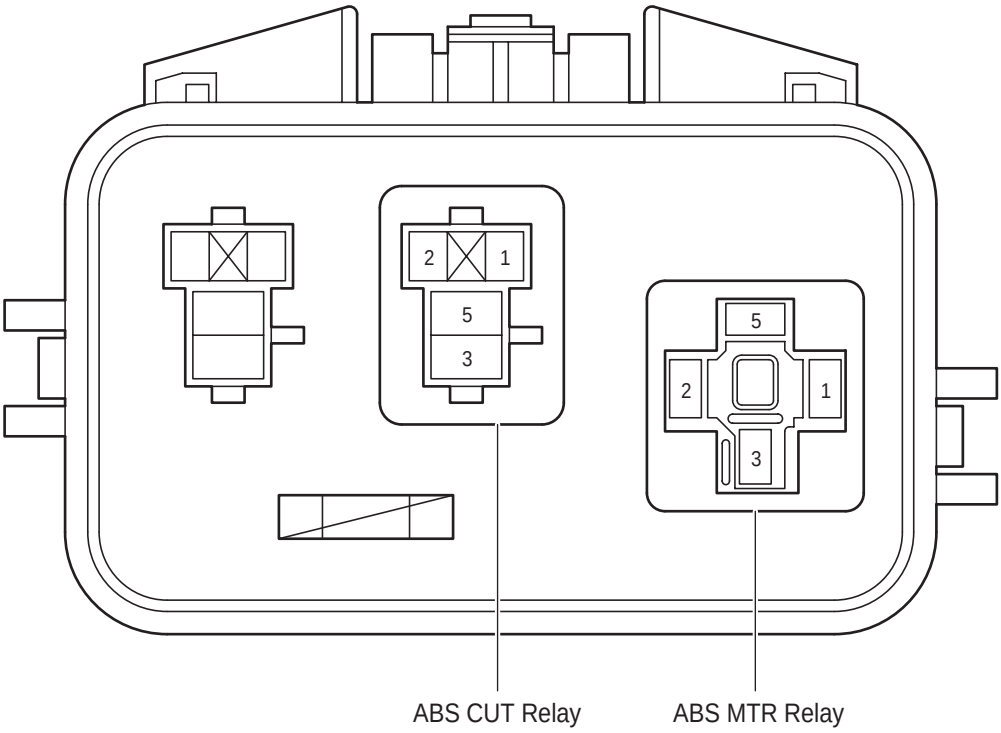

F RELAY LOCATIONS

: Engine Room J/B	Engine Compartment Left (See Page 20)

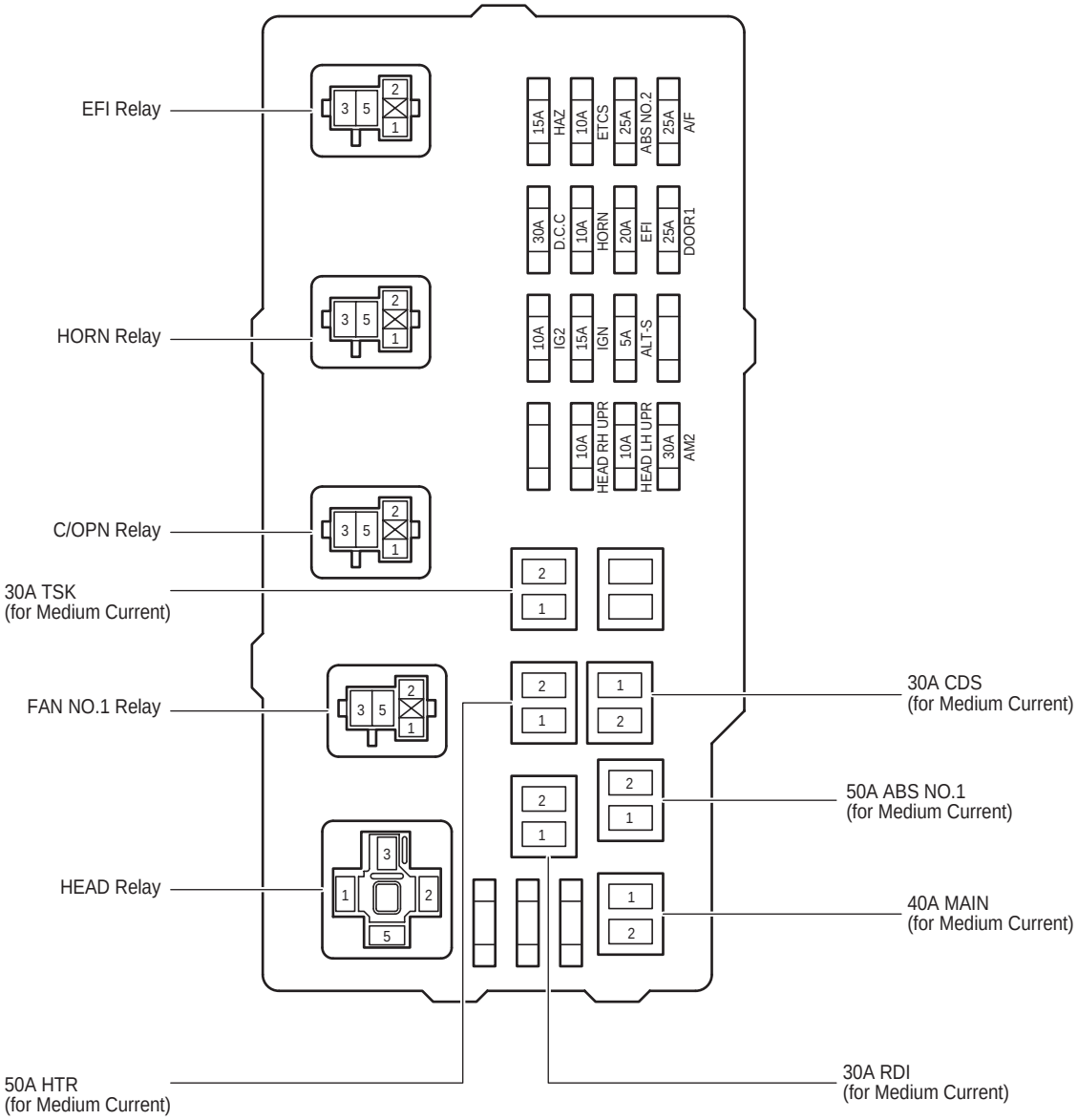

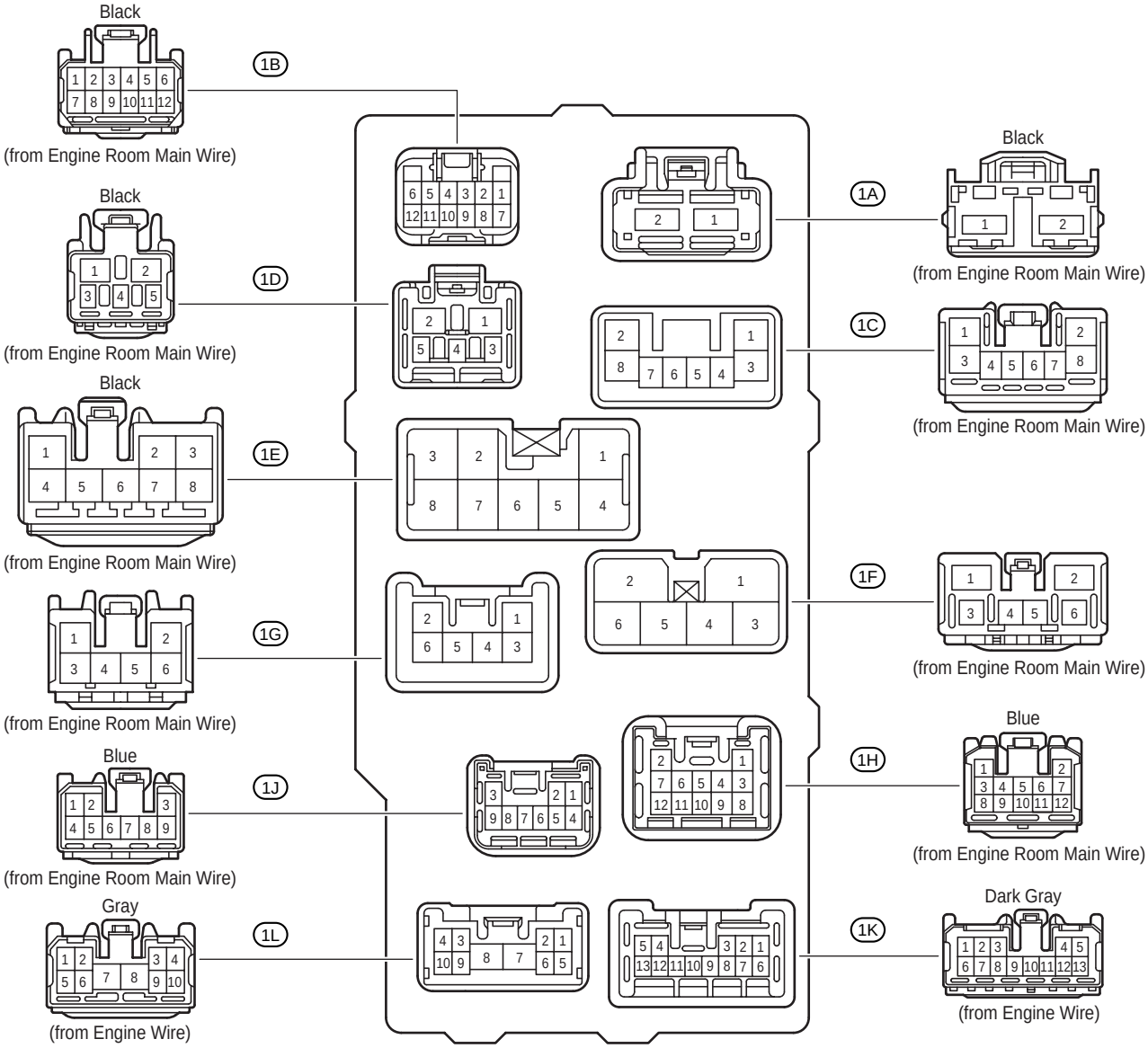
Black
1B
(from Engine Room Main Wire)
Black
1D
(from Engine Room Main Wire)
Black
1E
(from Engine Room Main Wire)
1G
(from Engine Room Main Wire)
Blue
1J
(from Engine Room Main Wire)
Gray
1L
(from Engine Wire)
Black
1A
(from Engine Room Main Wire)
1C
(from Engine Room Main Wire)
1F
(from Engine Room Main Wire)
Blue
1H
(from Engine Room Main Wire)
Dark Gray
1K
(from Engine Wire)

[Engine Room J/B Inner Circuit]

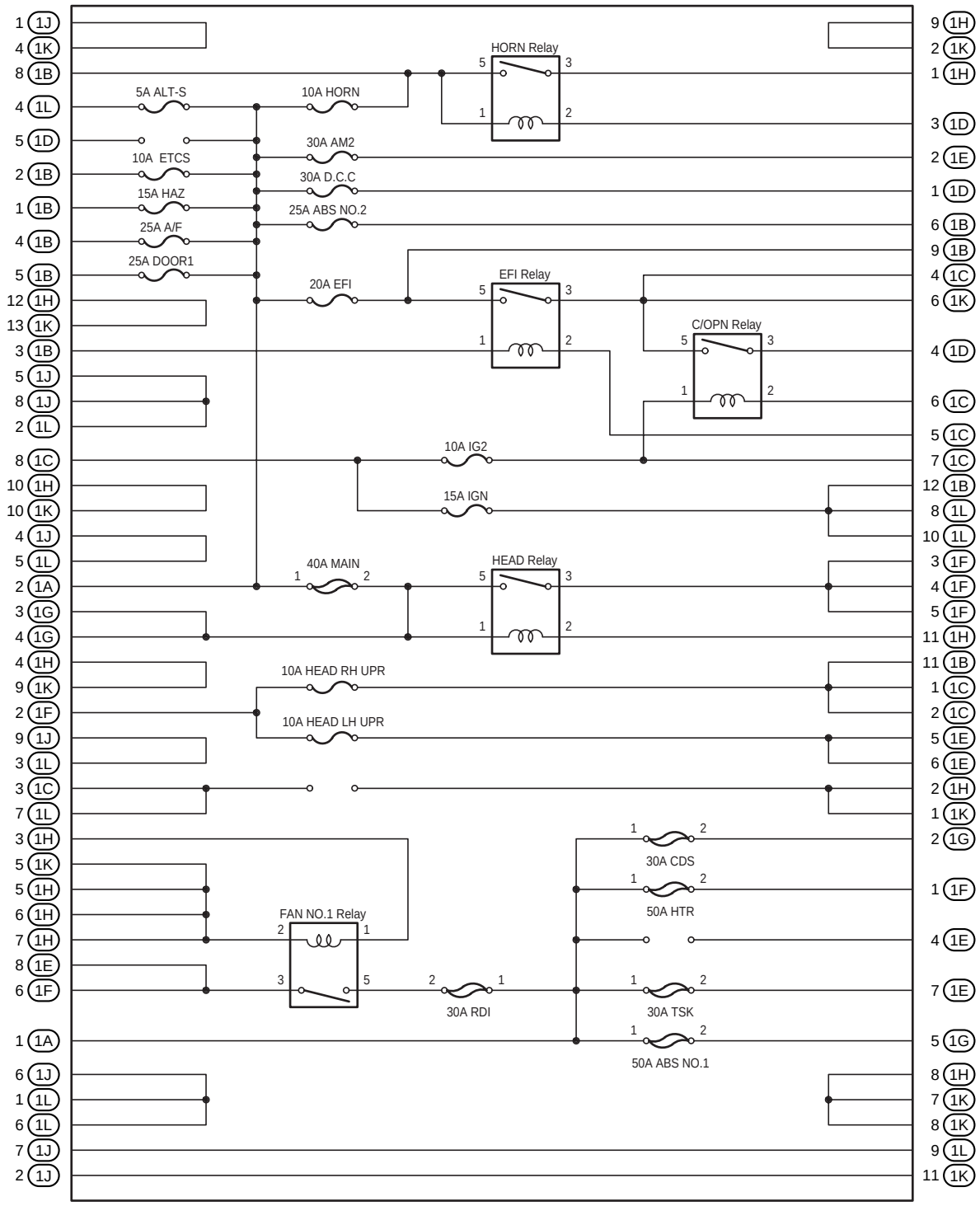

: Driver Side J/B	Lower Finish Panel (See Page 20)

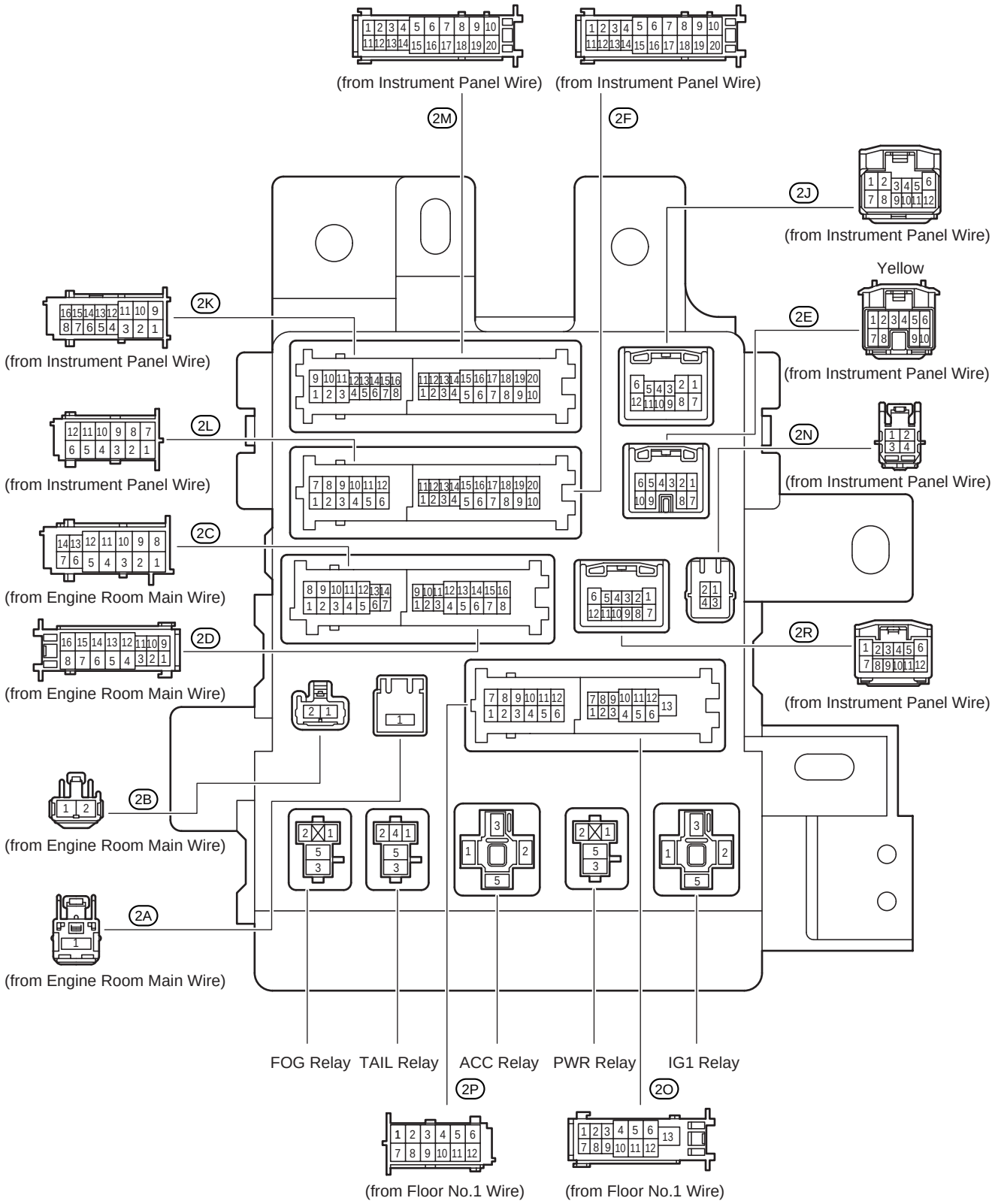

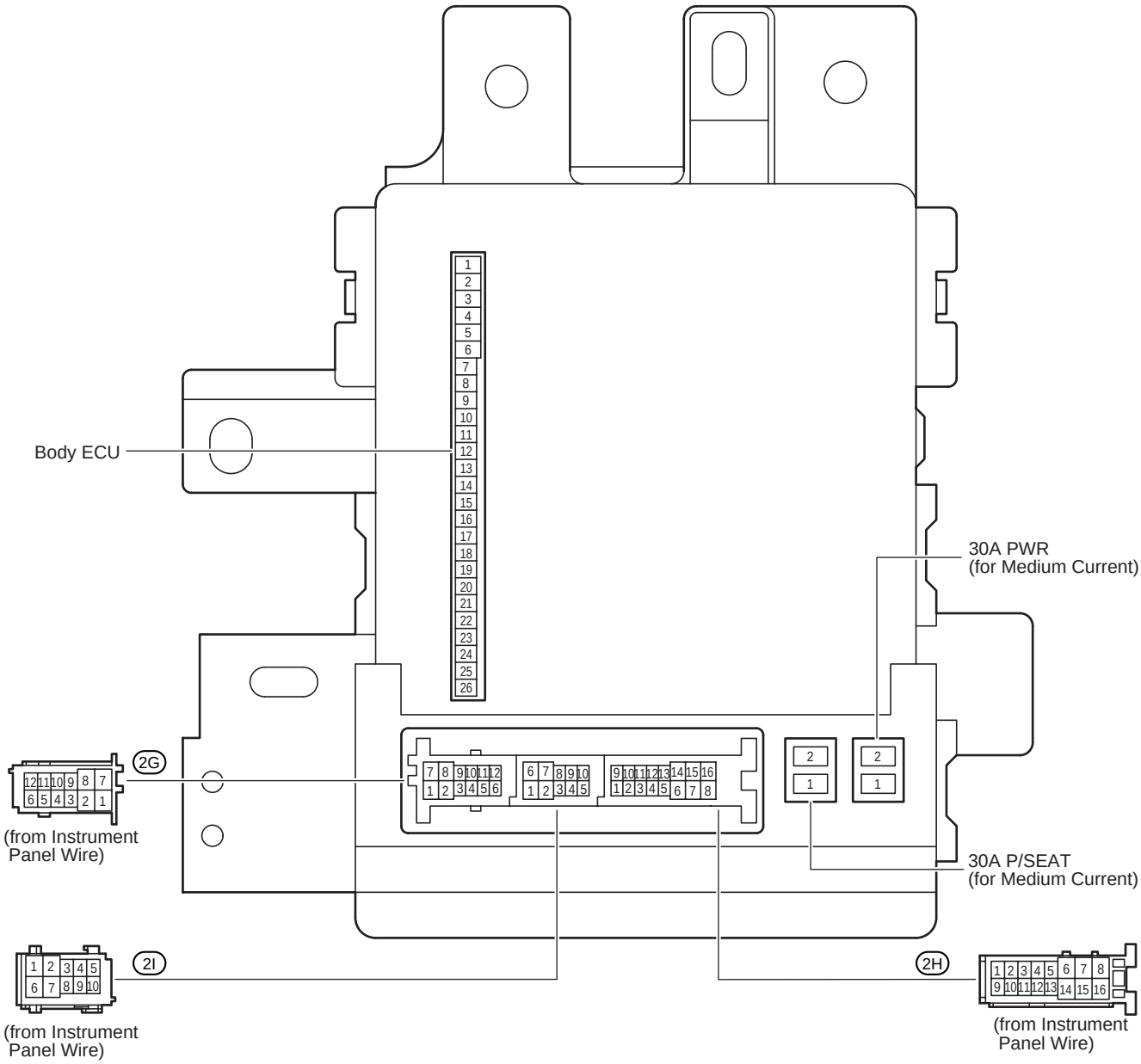
Body ECU
30A PWR
(for Medium Current)
30A P/SEAT
(for Medium Current)
2G
(from Instrument
Panel Wire)
2I
(from Instrument
Panel Wire)
2H
(from Instrument
Panel Wire)

: Driver Side J/B	Lower Finish Panel (See Page 20)

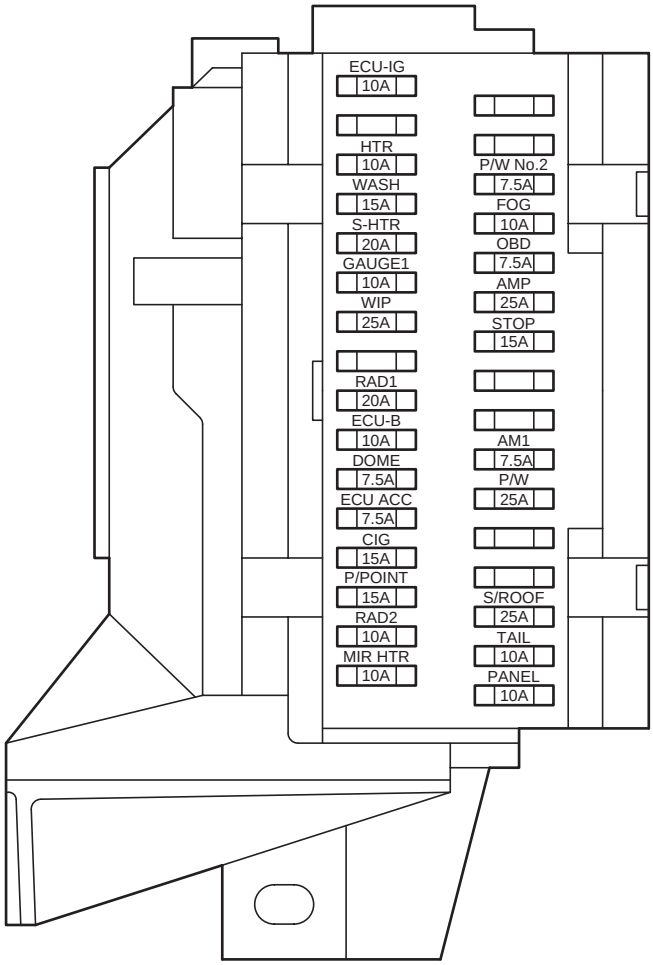

[Driver Side J/B Inner Circuit]

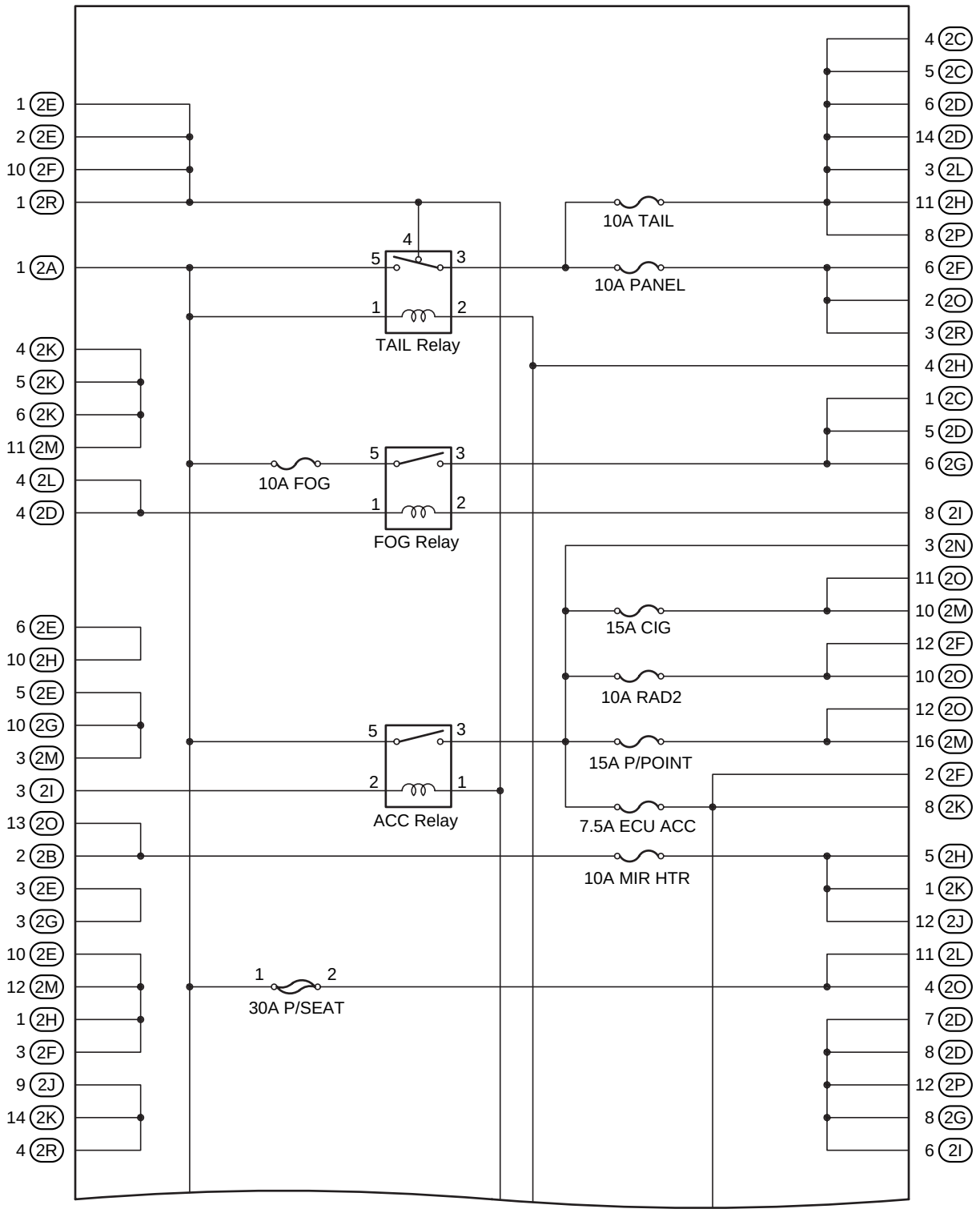

(Cont. Next Page)

[Driver Side J/B Inner Circuit]

(Cont' d)

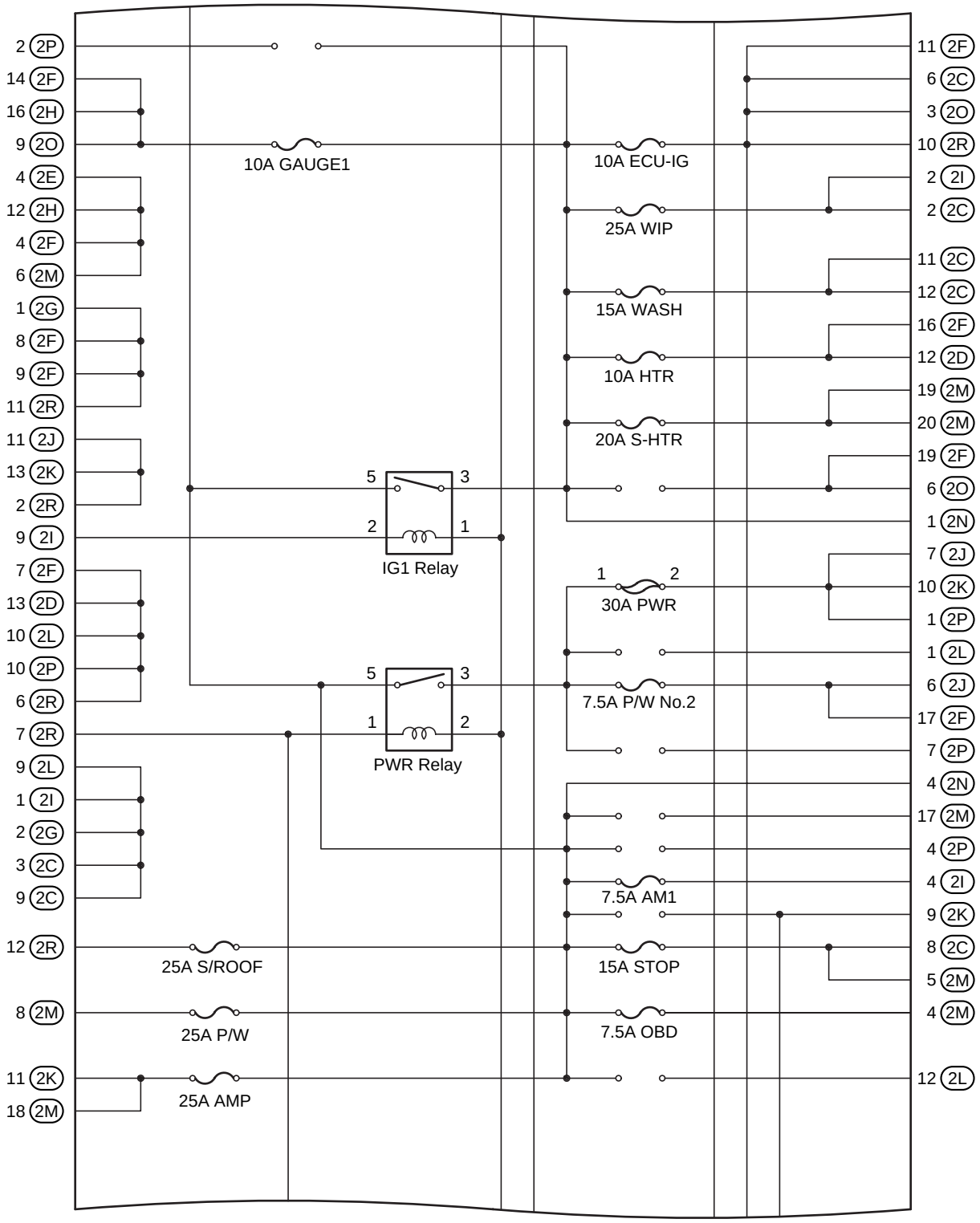

(Cont. Next Page)

(Cont' d)

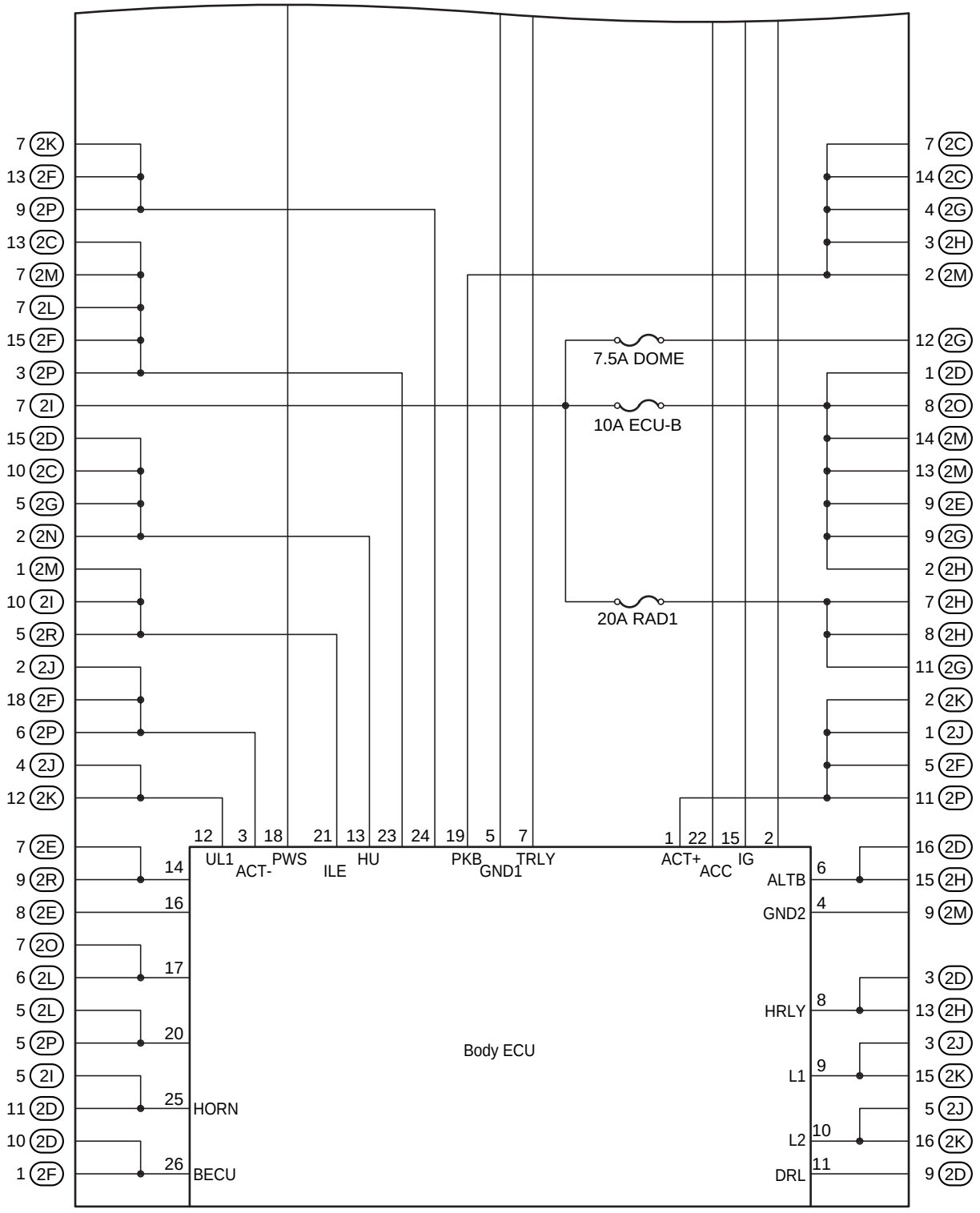
7 2K
13 2F
9 2P
13 2C
7 2M
7 2L
15 2F
3 2P
7 2I
15 2D
10 2C
5 2G
2 2N
1 2M
10 2I
5 2R
2 2J
18 2F
6 2P
4 2J
12 2K
7 2E
9 2R
8 2E
7 2O
6 2L
5 2L
5 2P
5 2I
11 2D
10 2D
1 2F
7 2C
14 2C
4 2G
3 2H
2 2M
12 2G
1 2D
8 2O
14 2M
13 2M
9 2E
9 2G
2 2H
7 2H
8 2H
11 2G
2 2K
1 2J
5 2F
11 2P
16 2D
15 2H
9 2M
3 2D
13 2H
3 2J
15 2K
5 2J
16 2K
9 2D
7.5A DOME
10A ECU-B
20A RAD1
12 UL1
3 ACT-
18 PWS
21 ILE
13 HU
23
24
19 PKB
5 GND1
7 TRLY
1 ACT+
22 ACC
15 IG
2
14
16
17
20
25 HORN
26 BECU
6 ALTB
4 GND2
8 HRLY
9 L1
10 L2
11 DRL
Body ECU

: Passenger Side J/B	Instrument Panel Brace RH (See Page 20)

(C/P, Convertible w/ VSC)

(from Instrument Panel Wire)

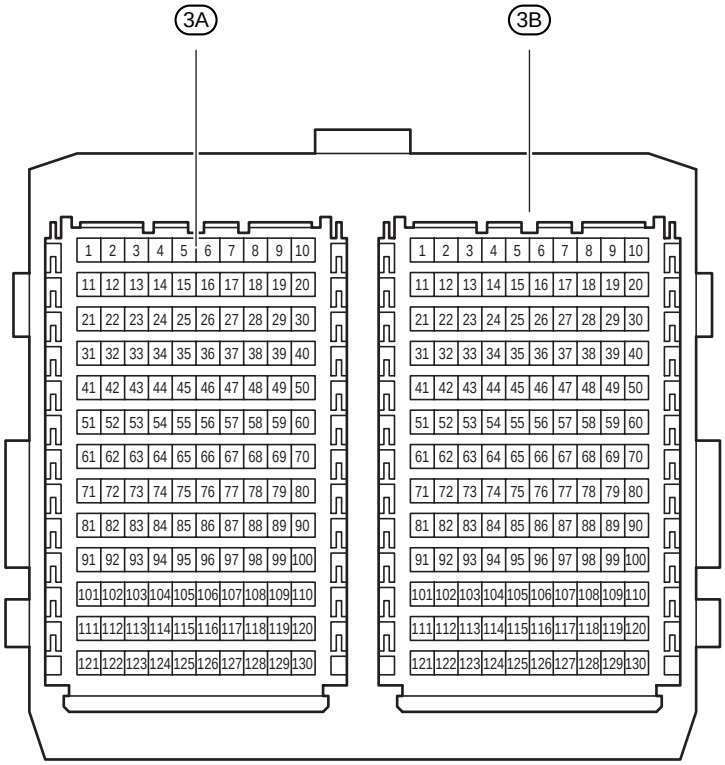

Short Terminal Grouping

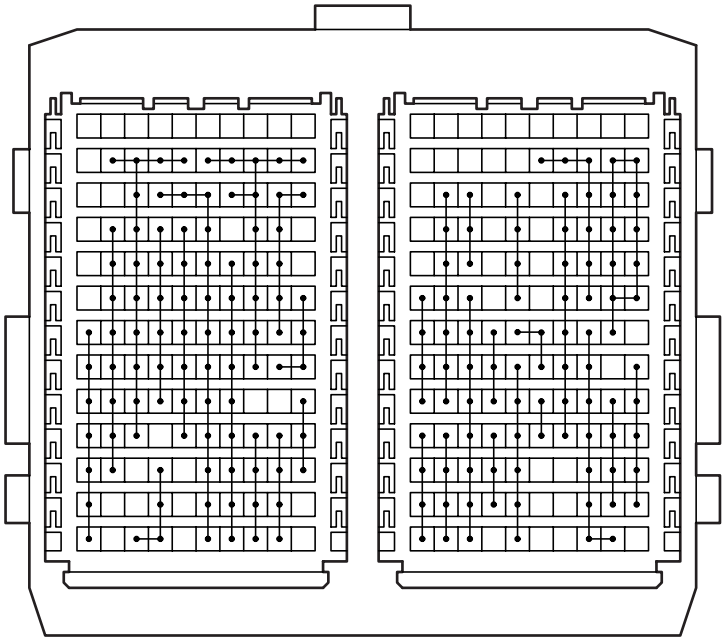

: Passenger Side J/B	Instrument Panel Brace RH (See Page 20)

(Convertible w/o VSC)

(from Instrument Panel Wire)

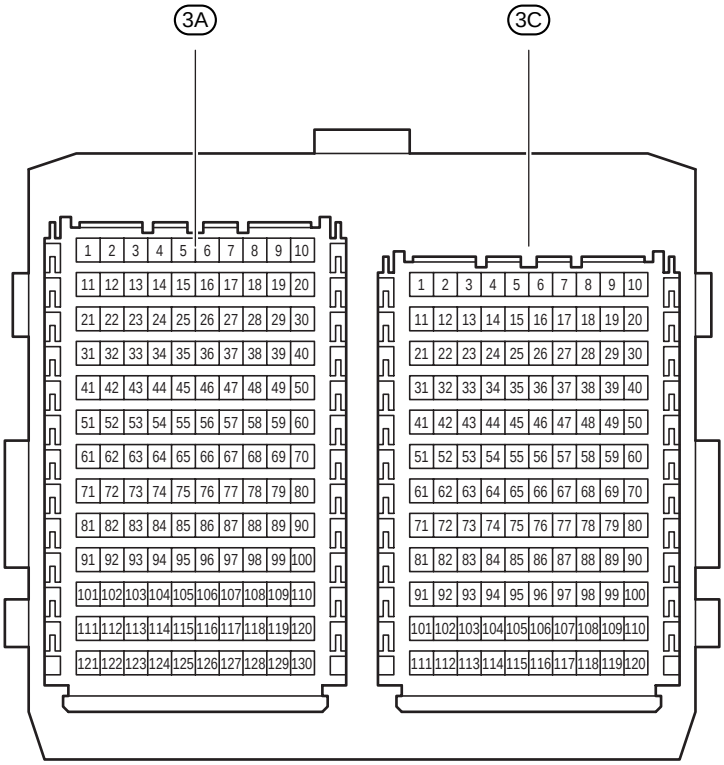

Short Terminal Grouping

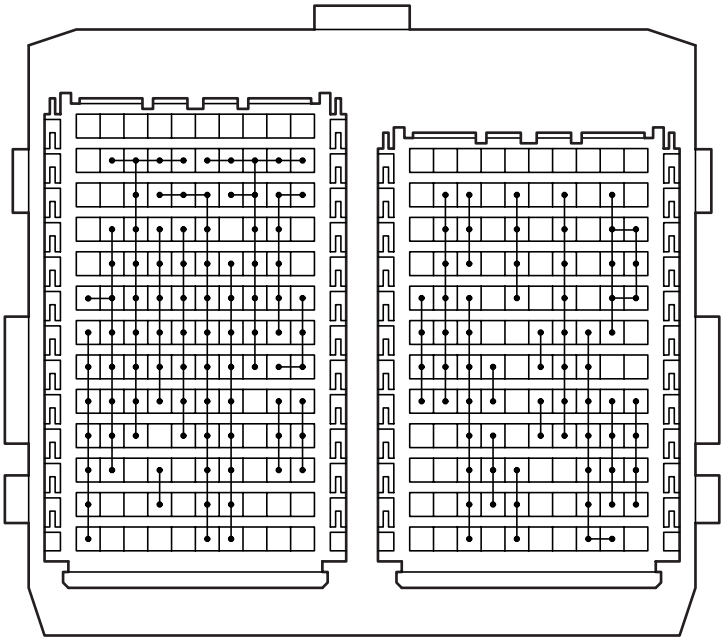

Junction Connector (CAN)	Instrument Panel Brace LH (See Page 20)

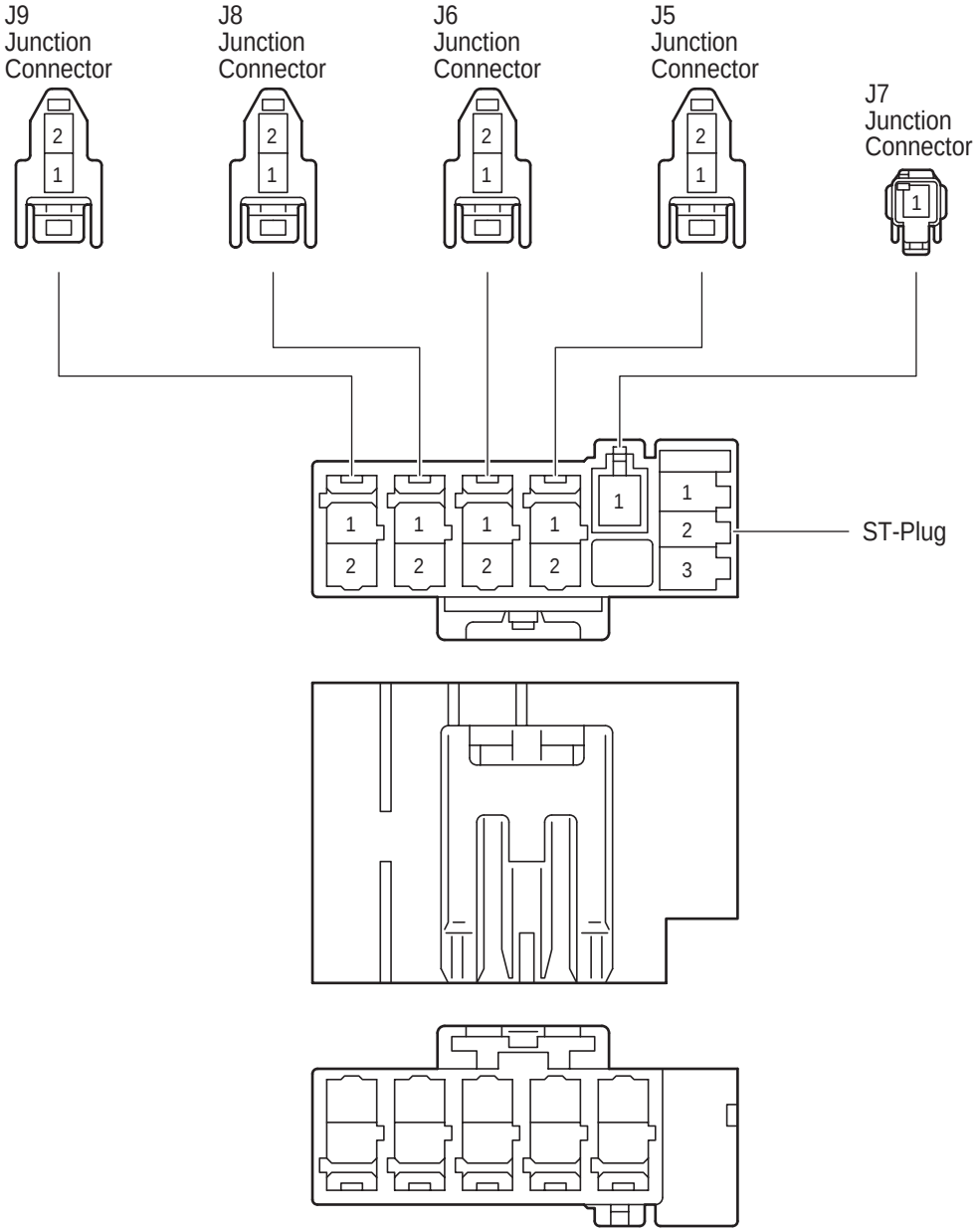

[Junction Connector Inner Circuit]
(CAN)

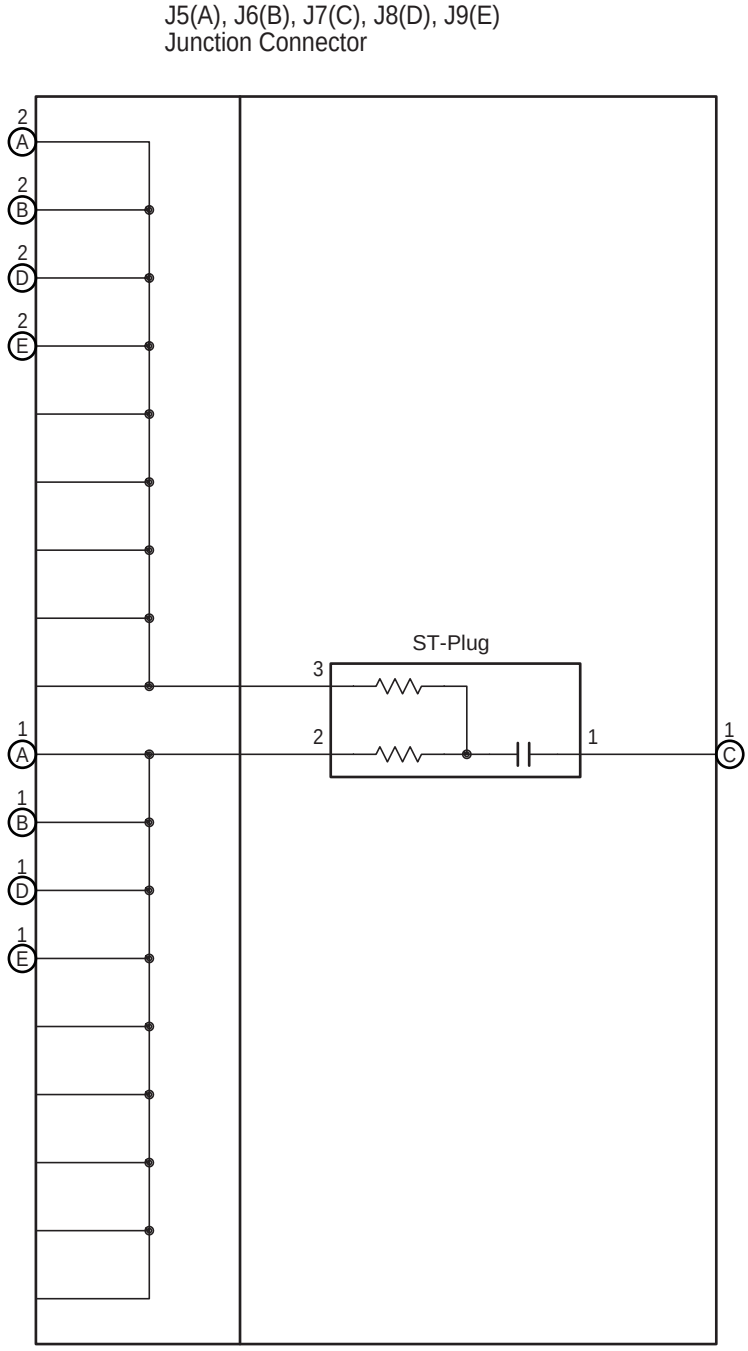

Position of Parts in Engine Compartment

[3MZ–FE]

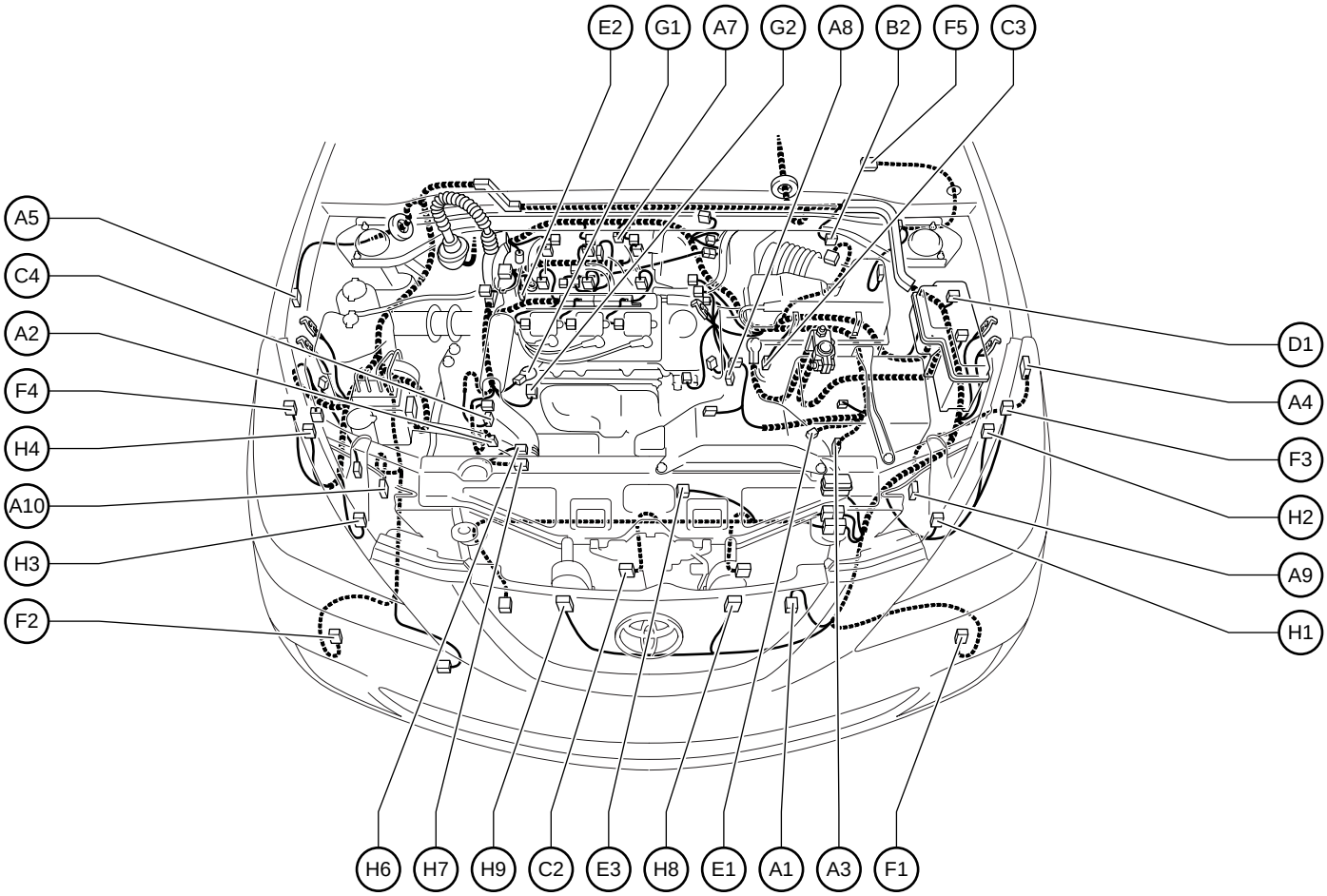

A 1 A/C Ambient Temp. Sensor
A 2 A/C Lock Sensor
A/C Magnetic Clutch
A 3 A/T Indicator Light SW
Back–Up Light SW
Park/Neutral Position SW
A 4 ABS Speed Sensor Front LH
A 5 ABS Speed Sensor Front RH
A 7 Air Fuel Ratio Sensor (Bank 1 Sensor 1)
A 8 Air Fuel Ratio Sensor (Bank 2 Sensor 1)
A 9 Airbag Sensor Front LH
A10 Airbag Sensor Front RH

B 2 Brake Fluid Level Warning SW

C 2 Condenser Fan Motor
C 3 Counter Gear Speed Sensor
C 4 Crankshaft Position Sensor

D 1 Diode (A/C No.1)

E 1 Electronically Controlled Transmission Solenoid
E 2 Engine Coolant Temp. Sensor
E 3 Engine Hood Courtesy SW

F 1 Front Fog Light LH
F 2 Front Fog Light RH
F 3 Front Parking Light LH
Front Turn Signal Light LH
F 4 Front Parking Light RH
Front Turn Signal Light RH
F 5 Front Wiper Motor

G 1 Generator
G 2 Generator

H 1 Headlight LH (High)
H 2 Headlight LH (Low)
H 3 Headlight RH (High)
H 4 Headlight RH (Low)
H 6 Heated Oxygen Sensor (Bank 1 Sensor 2)
H 7 Heated Oxygen Sensor (Bank 2 Sensor 2)
H 8 Horn LH
H 9 Horn RH

Position of Parts in Engine Compartment

[3MZ–FE]

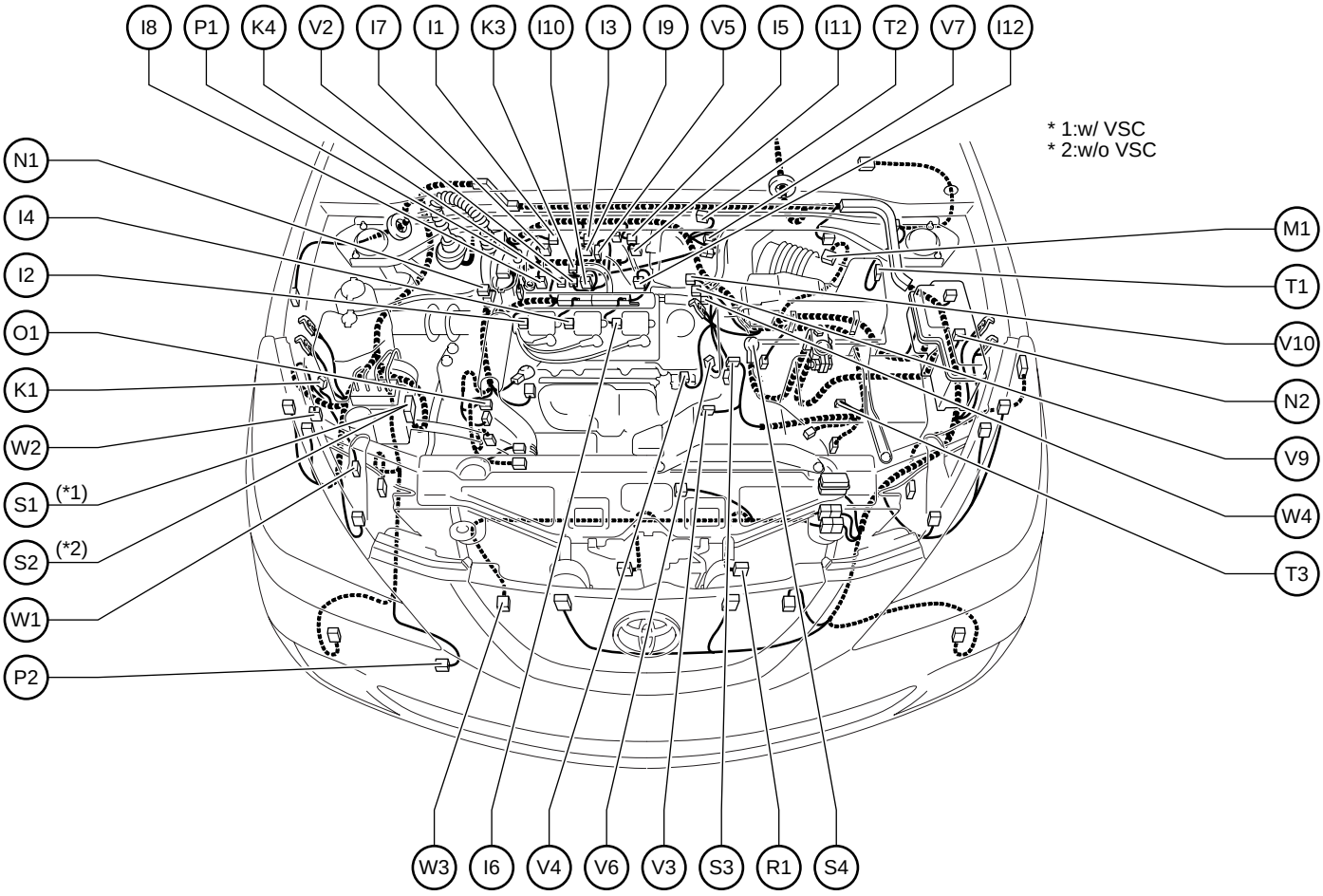

I 1 Ignition Coil and Igniter No.1
I 2 Ignition Coil and Igniter No.2
I 3 Ignition Coil and Igniter No.3
I 4 Ignition Coil and Igniter No.4
I 5 Ignition Coil and Igniter No.5
I 6 Ignition Coil and Igniter No.6
I 7 Injector No.1
I 8 Injector No.2
I 9 Injector No.3
I 10 Injector No.4
I 11 Injector No.5
I 12 Injector No.6

K 1 Keyless Buzzer
K 3 Knock Sensor (Bank 1)
K 4 Knock Sensor (Bank 2)

M 1 Mass Air Flow Meter

N 1 Noise Filter (Ignition)
N 2 Noise Filter (Rear Window Defogger)

O 1 Oil Pressure SW

P 1 Power Steering Oil Pressure SW
P 2 Pressure SW

R 1 Radiator Fan Motor

S 1 Skid Control ECU with Actuator
S 2 Skid Control ECU with Actuator
S 3 Starter
S 4 Starter

T 1 Theft Deterrent Horn
T 2 Throttle Control Motor
Throttle Position Sensor
T 3 Turbine Speed Sensor

V 2 VSV (ACIS)
V 3 VSV (ACM)
V 4 VSV (AICV)
V 5 VSV (EVAP)
V 6 VVT Sensor LH
V 7 VVT Sensor RH
V 9 VVT Solenoid LH
V 10 VVT Solenoid RH

W 1 Washer Level Sensor
W 2 Washer Motor
W 3 Water Temp. SW No.1
W 4 Water Temp. SW No.2

Position of Parts in Engine Compartment

[2AZ–FE]

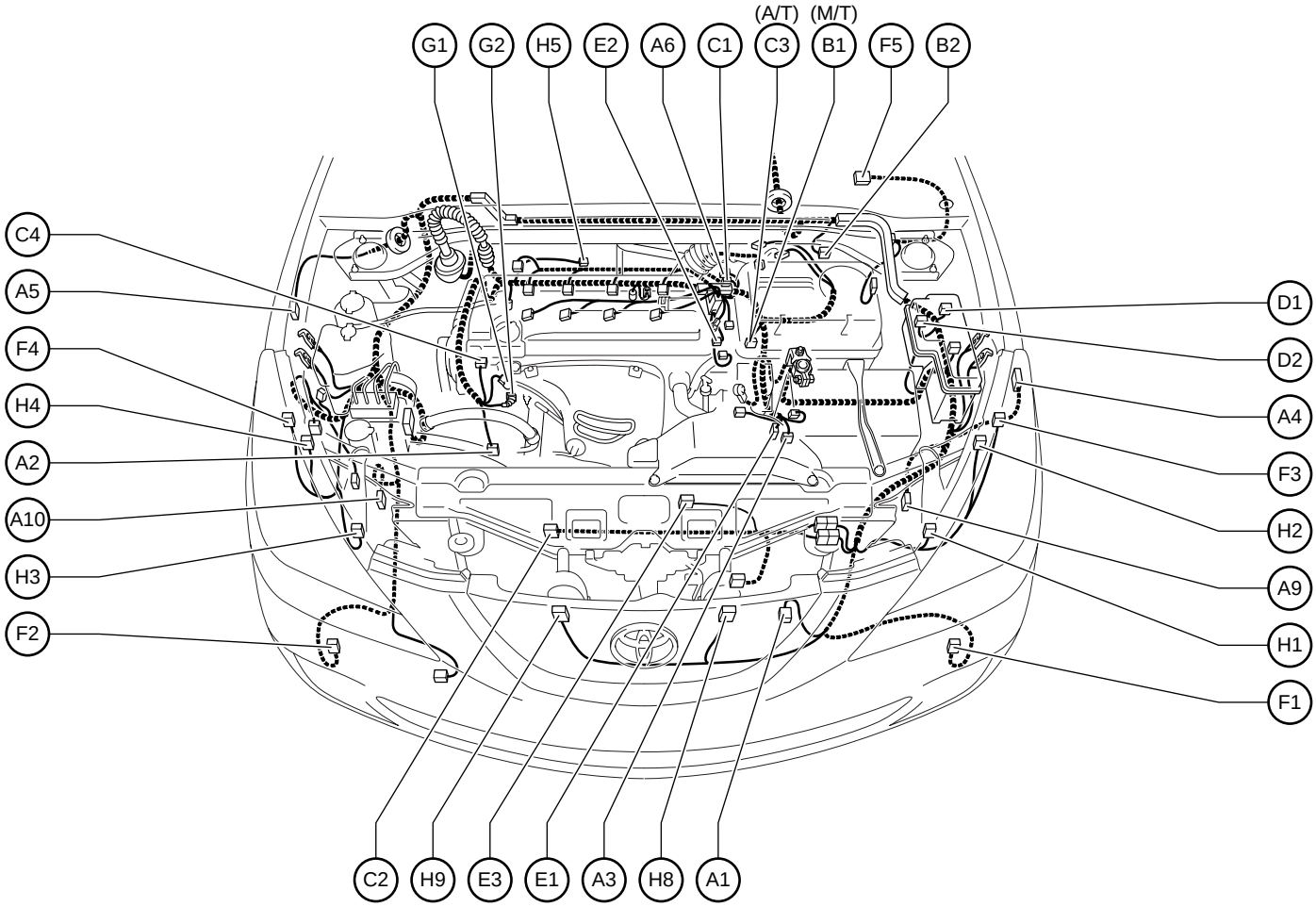

A 1 A/C Ambient Temp. Sensor
A 2 A/C Lock Sensor
A/C Magnetic Clutch
A 3 A/T Indicator Light SW
Back–Up Light SW
Park/Neutral Position SW
A 4 ABS Speed Sensor Front LH
A 5 ABS Speed Sensor Front RH
A 6 Air Fuel Ratio Sensor (Bank 1 Sensor 1)
A 9 Airbag Sensor Front LH
A10 Airbag Sensor Front RH

B 1 Back–Up Light SW
B 2 Brake Fluid Level Warning SW

C 1 Camshaft Position Sensor
C 2 Condenser Fan Motor
C 3 Counter Gear Speed Sensor
C 4 Crankshaft Position Sensor

D 1 Diode (A/C No.1)
D 2 Diode (A/C No.2)

E 1 Electronically Controlled Transmission Solenoid
E 2 Engine Coolant Temp. Sensor
E 3 Engine Hood Courtesy SW

F 1 Front Fog Light LH
F 2 Front Fog Light RH
F 3 Front Parking Light LH
Front Turn Signal Light LH
F 4 Front Parking Light RH
Front Turn Signal Light RH
F 5 Front Wiper Motor

G 1 Generator
G 2 Generator

H 1 Headlight LH (High)
H 2 Headlight LH (Low)
H 3 Headlight RH (High)
H 4 Headlight RH (Low)
H 5 Heated Oxygen Sensor (Bank 1 Sensor 2)
H 8 Horn LH
H 9 Horn RH

Position of Parts in Engine Compartment

[2AZ–FE]

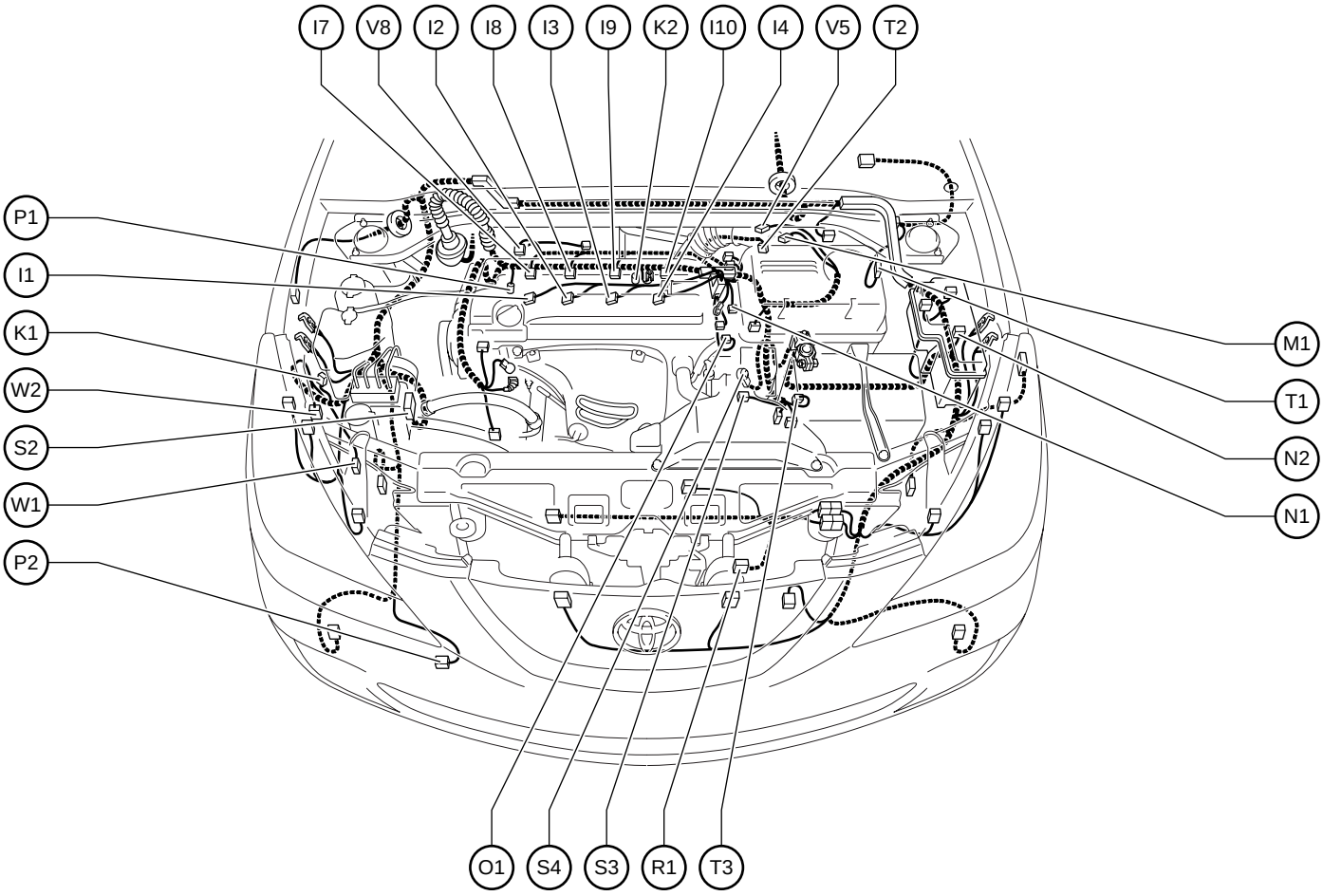

I 1 Ignition Coil and Igniter No.1
I 2 Ignition Coil and Igniter No.2
I 3 Ignition Coil and Igniter No.3
I 4 Ignition Coil and Igniter No.4
I 7 Injector No.1
I 8 Injector No.2
I 9 Injector No.3
I 10 Injector No.4

K 1 Keyless Buzzer
K 2 Knock Sensor (Bank 1)

M 1 Mass Air Flow Meter

N 1 Noise Filter (Ignition)
N 2 Noise Filter (Rear Window Defogger)

O 1 Oil Pressure SW

P 1 Power Steering Oil Pressure SW
P 2 Pressure SW

R 1 Radiator Fan Motor

S 2 Skid Control ECU with Actuator
S 3 Starter
S 4 Starter

T 1 Theft Deterrent Horn
T 2 Throttle Control Motor
Throttle Position Sensor
T 3 Turbine Speed Sensor

V 5 VSV (EVAP)
V 8 VVT Solenoid

W 1 Washer Level Sensor
W 2 Washer Motor

Position of Parts in Instrument Panel

[C/P]

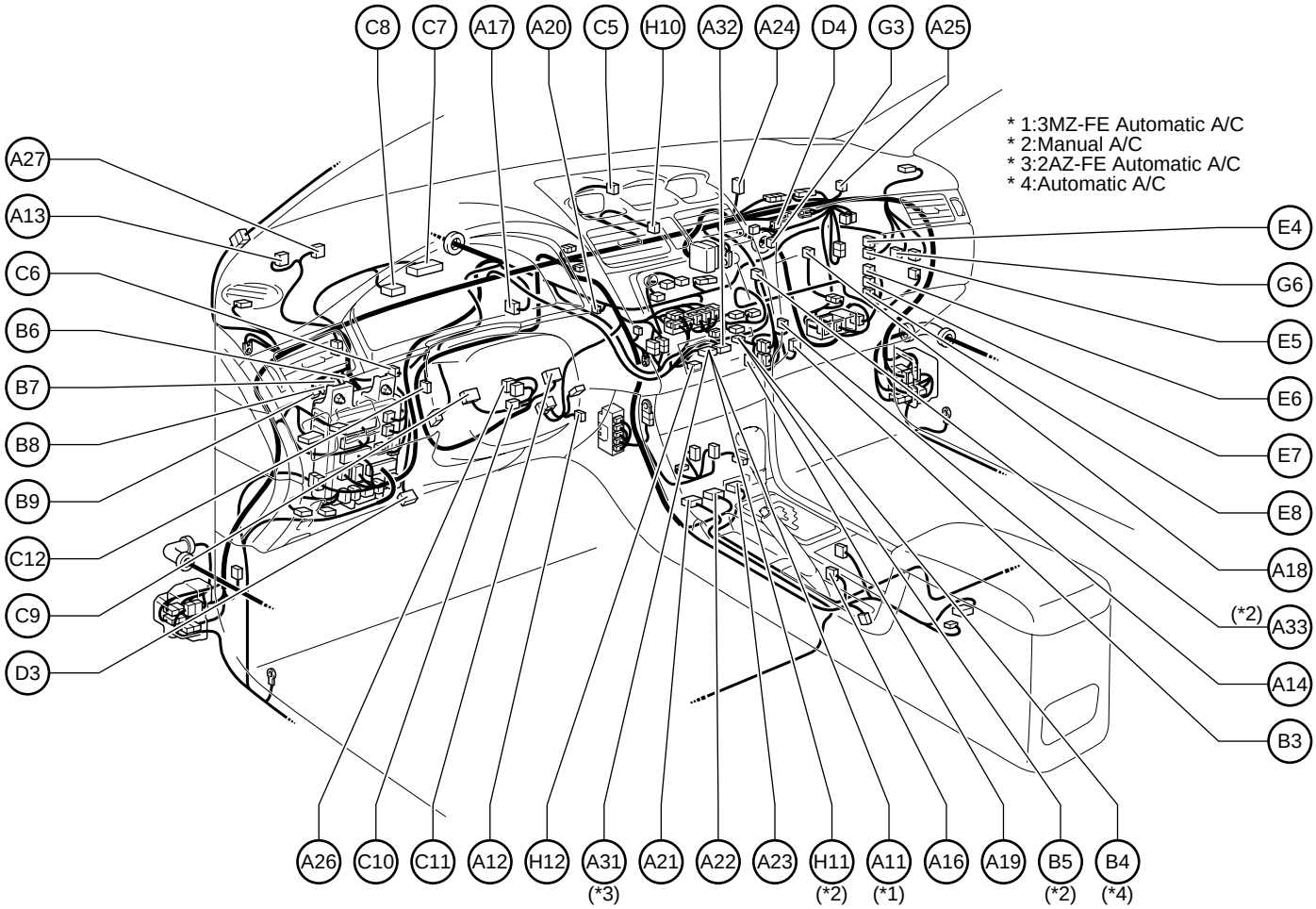

A 11 A/C Control Assembly
A 12 A/C Room Temp. Sensor
A 13 A/C Solar Sensor
A 14 A/C Thermistor
A 16 A/T Shift Lever Illumination
Transmission Control SW
A 17 Accelerator Pedal Position Sensor
A 18 Air Inlet Control Servo Motor
A 19 Air Mix Control Servo Motor
A 20 Air Vent Mode Control Servo Motor
A 21 Airbag Sensor Assembly
A 22 Airbag Sensor Assembly
A 23 Airbag Sensor Assembly
A 24 Airbag Squib (Front Passenger Airbag Assembly)
A 25 Airbag Squib (Front Passenger Airbag Assembly)
A 26 Airbag Squib (Steering Wheel Pad)
A 27 Automatic Light Control Sensor
A 31 A/C Control Assembly
A 32 A/C Control Assembly
A 33 A/C Amplifier

B 3 Blower Motor
B 4 Blower Motor Controller
B 5 Blower Resistor
B 6 Body ECU
B 7 Body ECU
B 8 Body ECU
B 9 Body ECU

C 5 Clock
C 6 Clutch Start SW
C 7 Combination Meter
C 8 Combination Meter
C 9 Combination SW
C 10 Combination SW
C 11 Combination SW
C 12 Cruise Control Clutch SW

D 3 Data Link Connector 3
D 4 Door Control Receiver

E 4 Engine Control Module
E 5 Engine Control Module
E 6 Engine Control Module
E 7 Engine Control Module
E 8 Engine Control Module

G 3 Glove Box Light
G 6 Gateway ECU

H 10 Hazard SW
H 11 Heater Control SW
H 12 Heater Control SW

Position of Parts in Instrument Panel

[C/P]

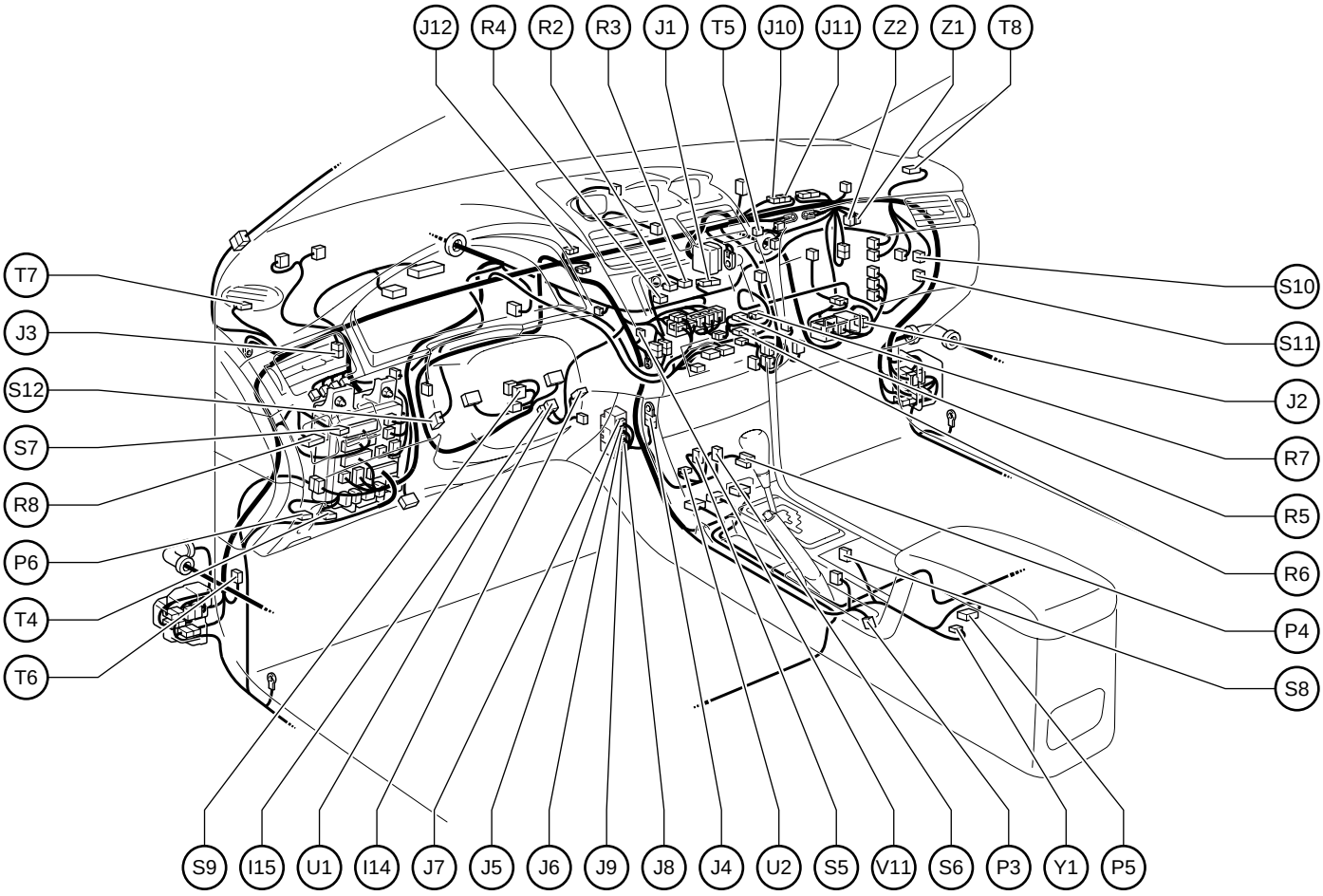

I 14 Ignition Key Cylinder Light
Transponder Key Amplifier
I 15 Ignition SW

J 1 Junction Connector
J 2 Junction Connector
J 3 Junction Connector
J 4 Junction Connector
J 5 Junction Connector
J 6 Junction Connector
J 7 Junction Connector
J 8 Junction Connector
J 9 Junction Connector
J 10 Junction Connector
J 11 Junction Connector
J 12 Junction Connector

P 3 Parking Brake SW
P 4 Power Outlet (Front)
P 5 Power Outlet (Rear)
P 6 Pressure SW

R 2 Radio and Player
R 3 Radio and Player
R 4 Radio and Player
R 5 Radio and Player with Display
R 6 Radio and Player with Display (w/ Navigation System)
Radio and Player (w/o Navigation System)
R 7 Radio and Player with Display (w/ Navigation System)
Radio and Player (w/o Navigation System)
R 8 Remote Control Mirror SW

S 5 Seat Heater SW (Driver's Seat)
S 6 Seat Heater SW (Front Passenger's Seat)
S 7 Security Indicator
S 8 Shift Lock Control ECU
Transmission Control SW
S 9 Steering Sensor
S 10 Stereo Component Amplifier
S 11 Stereo Component Amplifier
S 12 Stop Light SW

T 4 TRAC Off SW
T 5 Transponder Key Computer
T 6 Turn Signal Flasher Relay
T 7 Tweeter LH
T 8 Tweeter RH

U 1 Unlock Warning SW
U 2 Upper Console Panel Sub–Assembly

V 11 VSC Buzzer

Y 1 Yaw Rate Sensor

Z 1 Option Connector (TVIP ECU)
Z 2 Option Connector (TVIP Glass Breakage Sensor ECU)

Position of Parts in Instrument Panel

[Convertible]

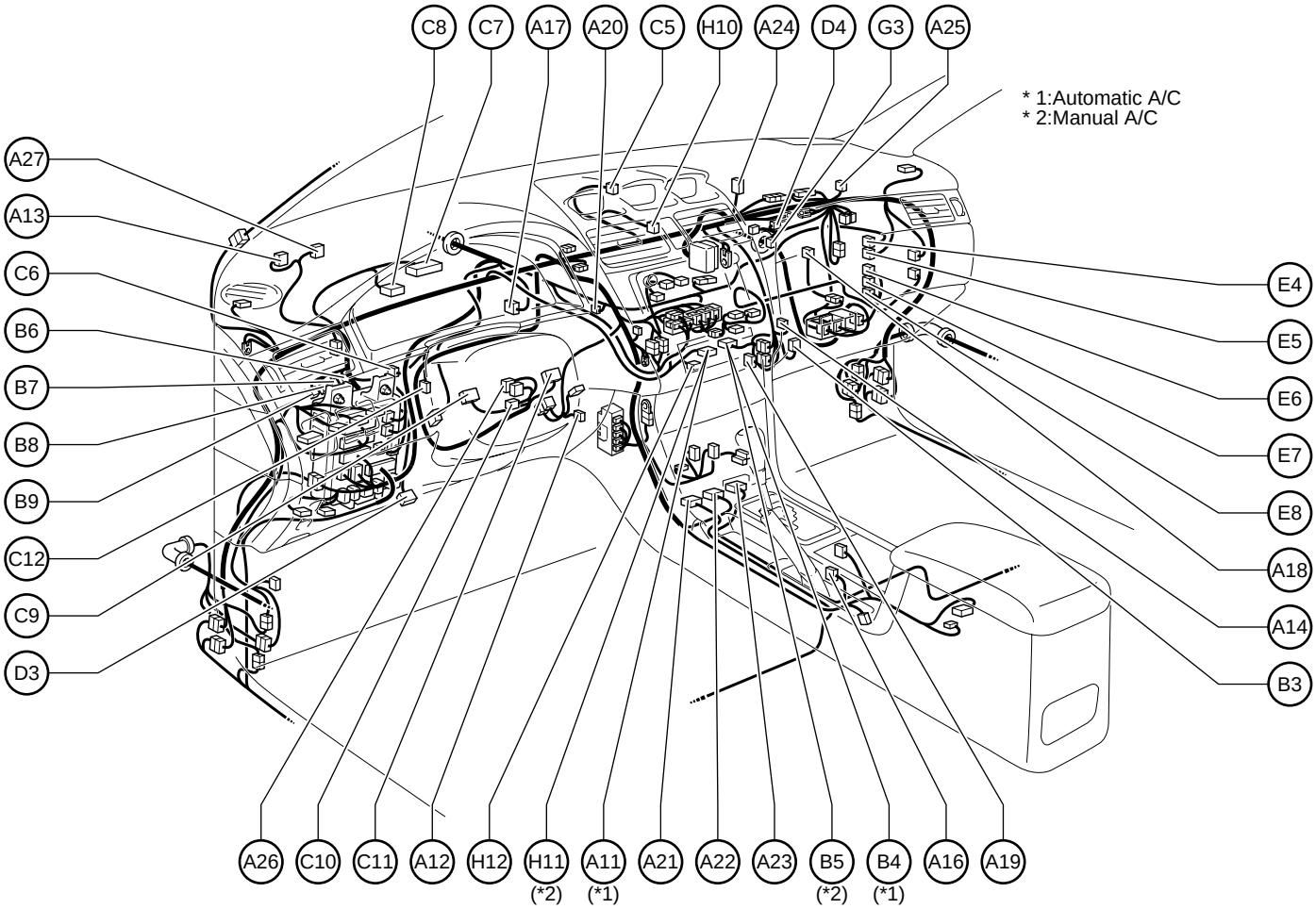

A 11 A/C Control Assembly
A 12 A/C Room Temp. Sensor
A 13 A/C Solar Sensor
A 14 A/C Thermistor
A 16 A/T Shift Lever Illumination Transmission Control SW
A 17 Accelerator Pedal Position Sensor
A 18 Air Inlet Control Servo Motor
A 19 Air Mix Control Servo Motor
A 20 Air Vent Mode Control Servo Motor
A 21 Airbag Sensor Assembly
A 22 Airbag Sensor Assembly
A 23 Airbag Sensor Assembly
A 24 Airbag Squib (Front Passenger Airbag Assembly)
A 25 Airbag Squib (Front Passenger Airbag Assembly)
A 26 Airbag Squib (Steering Wheel Pad)
A 27 Automatic Light Control Sensor

B 3 Blower Motor
B 4 Blower Motor Controller
B 5 Blower Resistor
B 6 Body ECU
B 7 Body ECU
B 8 Body ECU
B 9 Body ECU

C 5 Clock
C 6 Clutch Start SW
C 7 Combination Meter
C 8 Combination Meter
C 9 Combination SW
C 10 Combination SW
C 11 Combination SW
C 12 Cruise Control Clutch SW

D 3 Data Link Connector 3
D 4 Door Control Receiver

E 4 Engine Control Module
E 5 Engine Control Module
E 6 Engine Control Module
E 7 Engine Control Module
E 8 Engine Control Module

G 3 Glove Box Light

H 10 Hazard SW
H 11 Heater Control SW
H 12 Heater Control SW

Position of Parts in Instrument Panel

[Convertible]

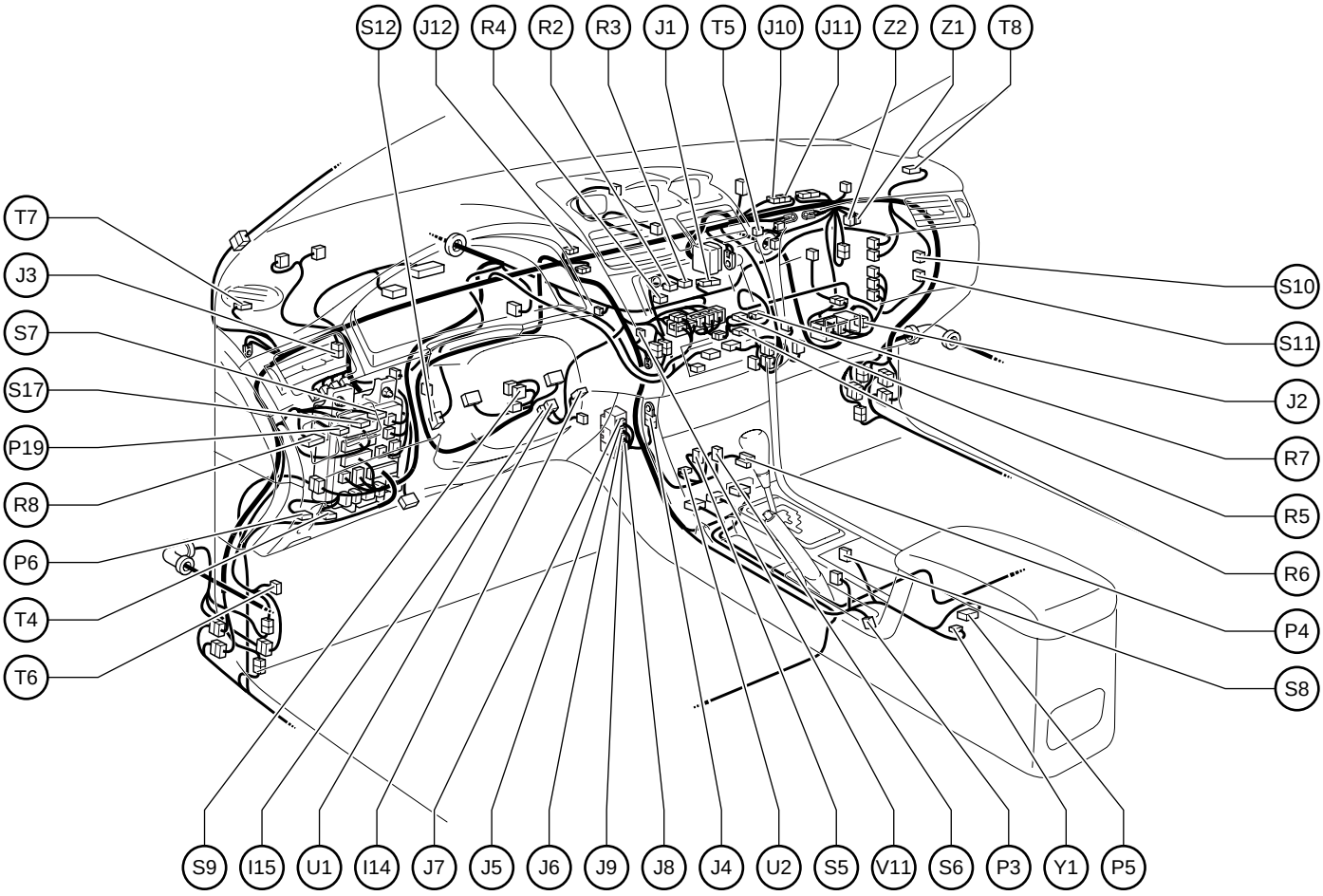

I 14 Ignition Key Cylinder Light
Transponder Key Amplifier
I 15 Ignition SW

J 1 Junction Connector
J 2 Junction Connector
J 3 Junction Connector
J 4 Junction Connector
J 5 Junction Connector
J 6 Junction Connector
J 7 Junction Connector
J 8 Junction Connector
J 9 Junction Connector
J 10 Junction Connector
J 11 Junction Connector
J 12 Junction Connector

P 3 Parking Brake SW
P 4 Power Outlet (Front)
P 5 Power Outlet (Rear)
P 6 Pressure SW
P 19 Power Window SW (All Window)

R 2 Radio and Player
R 3 Radio and Player
R 4 Radio and Player
R 5 Radio and Player with Display
R 6 Radio and Player with Display (w/ Navigation System)
Radio and Player (w/o Navigation System)
R 7 Radio and Player with Display (w/ Navigation System)
Radio and Player (w/o Navigation System)
R 8 Remote Control Mirror SW

S 5 Seat Heater SW (Driver's Seat)
S 6 Seat Heater SW (Front Passenger's Seat)
S 7 Security Indicator
S 8 Shift Lock Control ECU
Transmission Control SW
S 9 Steering Sensor
S 10 Stereo Component Amplifier
S 11 Stereo Component Amplifier
S 12 Stop Light SW
S 17 Sliding Roof Control SW

T 4 TRAC Off SW
T 5 Transponder Key Computer
T 6 Turn Signal Flasher Relay
T 7 Tweeter LH
T 8 Tweeter RH

U 1 Unlock Warning SW
U 2 Upper Console Panel Sub–Assembly

V 11 VSC Buzzer

Y 1 Yaw Rate Sensor

Z 1 Option Connector (TVIP ECU)
Z 2 Option Connector (TVIP Glass Breakage Sensor ECU)

Position of Parts in Body

[C/P]

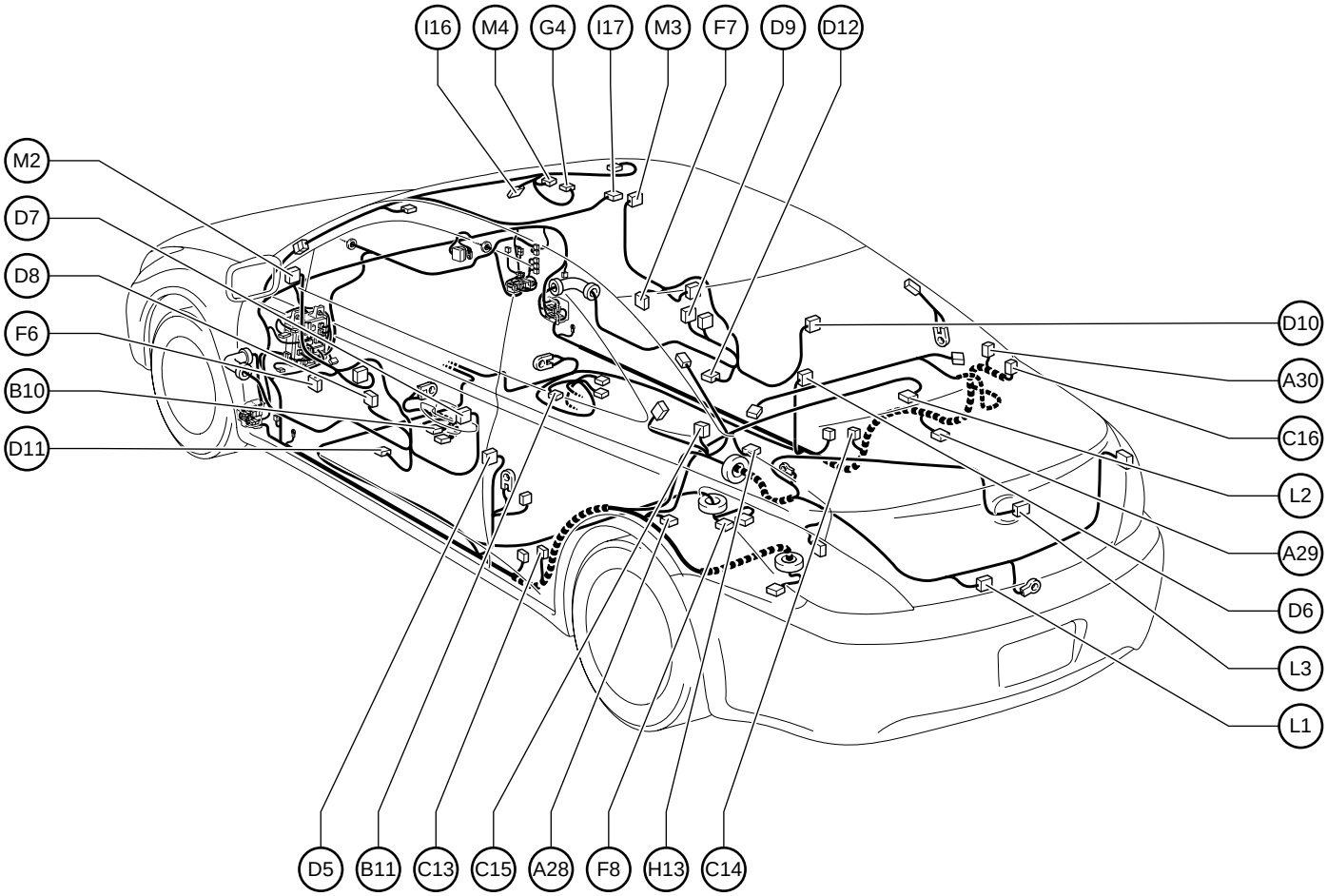

A28 ABS Speed Sensor Rear LH
A29 ABS Speed Sensor Rear RH
A30 Antenna Amplifier

B10 Buckle SW LH
Seat Position Sensor
B11 Buckle SW RH

C13 Curtain Shield Airbag Sensor LH
C14 Curtain Shield Airbag Sensor RH
C15 Curtain Shield Airbag Squib LH
C16 Curtain Shield Airbag Squib RH

D 5 Door Courtesy SW LH
D 6 Door Courtesy SW RH
D 7 Door Key Lock and Unlock SW LH
Door Lock Motor LH
Door Unlock Detection SW LH
D 8 Door Lock Control SW LH
Power Window Master SW
D 9 Door Lock Control SW RH
D10 Door Lock Motor RH
Door Unlock Detection SW RH
D11 Door Side Airbag Sensor LH
D12 Door Side Airbag Sensor RH

F 6 Front Door Speaker LH
F 7 Front Door Speaker RH
F 8 Fuel Pump
Fuel Sender

G 4 Garage Door Opener
Moon Roof Control SW
Personal Light

H13 High Mounted Stop Light

I 16 Inner Mirror
I 17 Interior Light

L 1 License Plate Light
L 2 Luggage Compartment Light
L 3 Luggage Compartment Door Opener Motor
Luggage Compartment Light SW

M 2 Mirror Heater LH
Remote Control Mirror LH
M 3 Mirror Heater RH
Remote Control Mirror RH
M 4 Moon Roof Control ECU and Motor

Position of Parts in Body

[C/P]

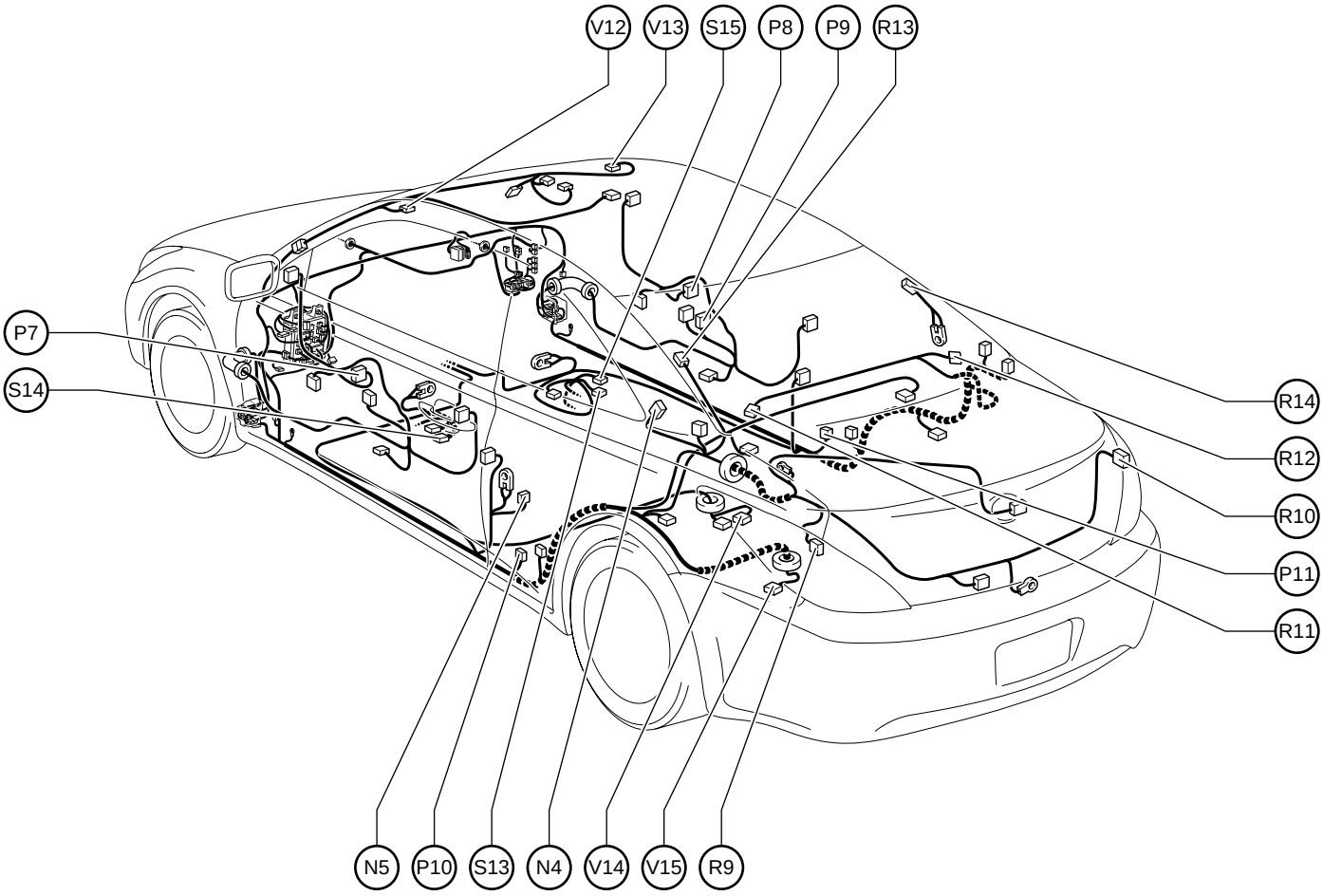

N 4 Noise Filter (Rear Window Defogger)
N 5 Noise Filter
(Stop Light and Luggage Compartment Light)

P 7 Power Window Motor Front LH
P 8 Power Window Motor Front RH
P 9 Power Window SW Front RH
P 10 Pretensioner LH
P 11 Pretensioner RH

R 9 Rear Combination Light LH
R 10 Rear Combination Light RH
R 11 Rear Speaker LH
R 12 Rear Speaker RH
R 13 Rear Window Defogger
R 14 Rear Window Defogger

S 13 Seat Heater (Front Passenger's Seat)
S 14 Side Airbag Squib LH
S 15 Side Airbag Squib RH

V 12 Vanity Light LH
V 13 Vanity Light RH
V 14 Vapor Pressure Sensor
V 15 VSV (Canister Closed Valve)

Position of Parts in Body

[Convertible]

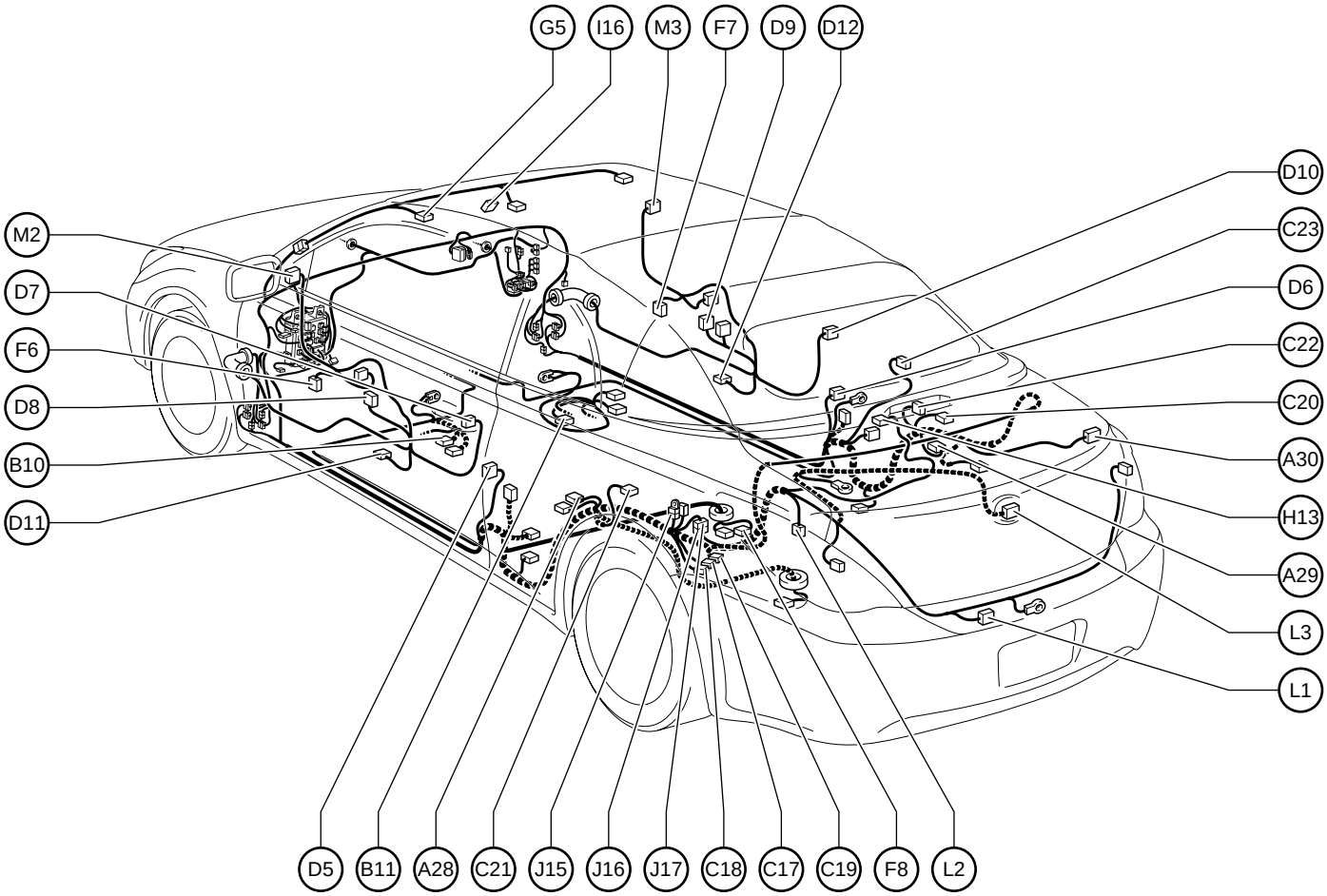

A28 ABS Speed Sensor Rear LH
A29 ABS Speed Sensor Rear RH
A30 Antenna Amplifier

B10 Buckle SW LH
Seat Position Sensor
B11 Buckle SW RH

C17 Convertible Roof Control Relay
C18 Convertible Roof Control Relay
C19 Convertible Roof Control Relay
C20 Convertible Roof Courtesy SW
C21 Convertible Roof Motor LH
C22 Convertible Roof Motor RH
C23 Courtesy Light Rear RH

D 5 Door Courtesy SW LH
D 6 Door Courtesy SW RH
D 7 Door Key Lock and Unlock SW LH
Door Lock Motor LH
Door Unlock Detection SW LH
D 8 Door Lock Control SW LH
Power Window Master SW
D 9 Door Lock Control SW RH
D10 Door Lock Motor RH
Door Unlock Detection SW RH
D11 Door Side Airbag Sensor LH
D12 Door Side Airbag Sensor RH

F 6 Front Door Speaker LH
F 7 Front Door Speaker RH
F 8 Fuel Pump
Fuel Sender

G 5 Garage Door Opener
Vanity Light LH

H13 High Mounted Stop Light

I 16 Inner Mirror

J 15 Junction Connector
J 16 Junction Connector
J 17 Junction Connector

L 1 License Plate Light
L 2 Luggage Compartment Light
L 3 Luggage Compartment Door Opener Motor
Luggage Compartment Light SW

M 2 Mirror Heater LH
Remote Control Mirror LH
M 3 Mirror Heater RH
Remote Control Mirror RH

Position of Parts in Body

[Convertible]

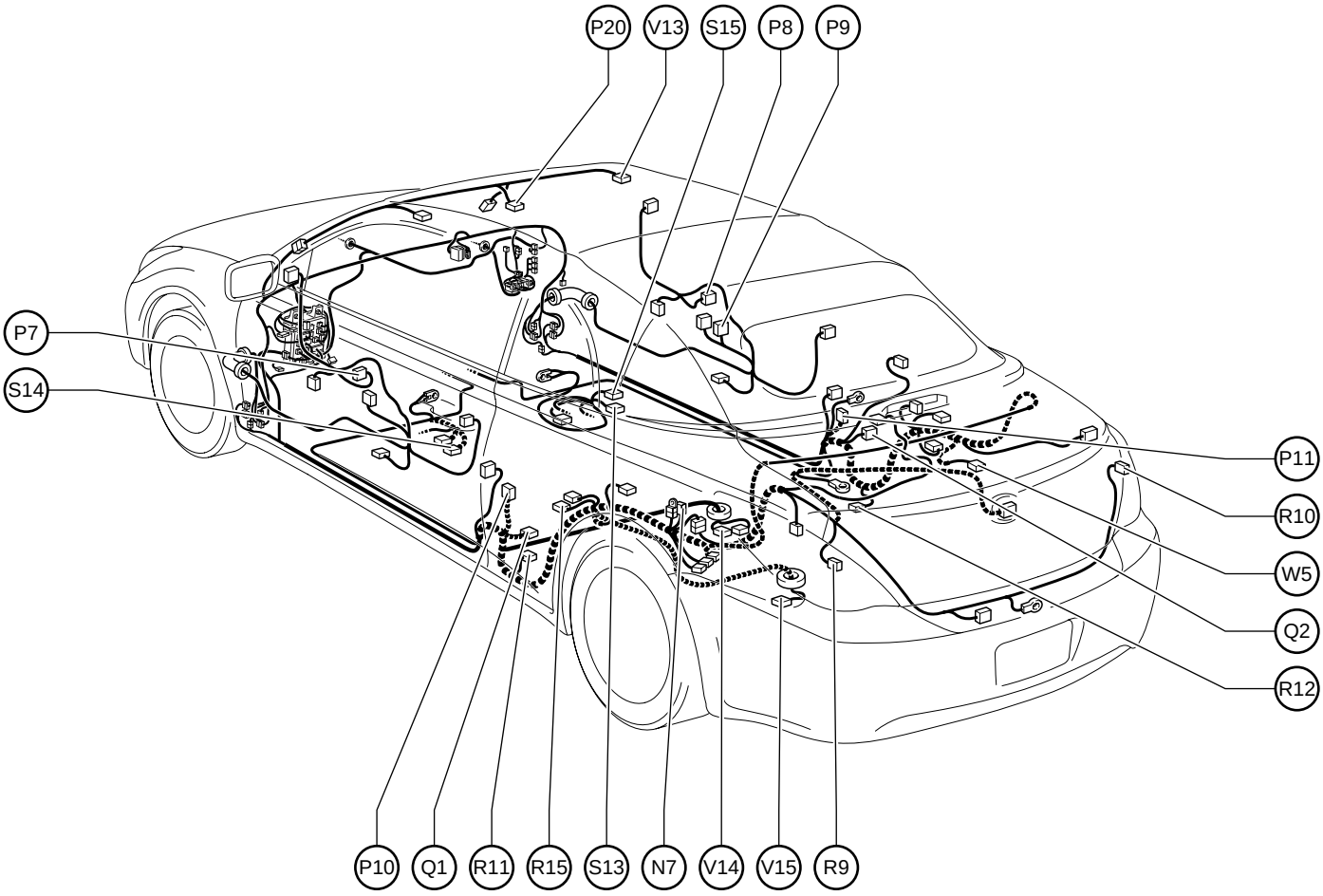

N 7 Noise Filter (Rear Window Defogger)

P 7 Power Window Motor Front LH
P 8 Power Window Motor Front RH
P 9 Power Window SW Front RH
P 10 Pretensioner LH
P 11 Pretensioner RH
P 20 Personal Light

Q 1 Quarter Power Window Motor LH
Q 2 Quarter Power Window Motor RH

R 9 Rear Combination Light LH
R 10 Rear Combination Light RH
R 11 Rear Speaker LH
R 12 Rear Speaker RH
R 15 Rear Window Defogger

S 13 Seat Heater (Front Passenger's Seat)
S 14 Side Airbag Squib LH
S 15 Side Airbag Squib RH

V 13 Vanity Light RH
V 14 Vapor Pressure Sensor
V 15 VSV (Canister Closed Valve)

W 5 Woofer

Position of Parts in Seat

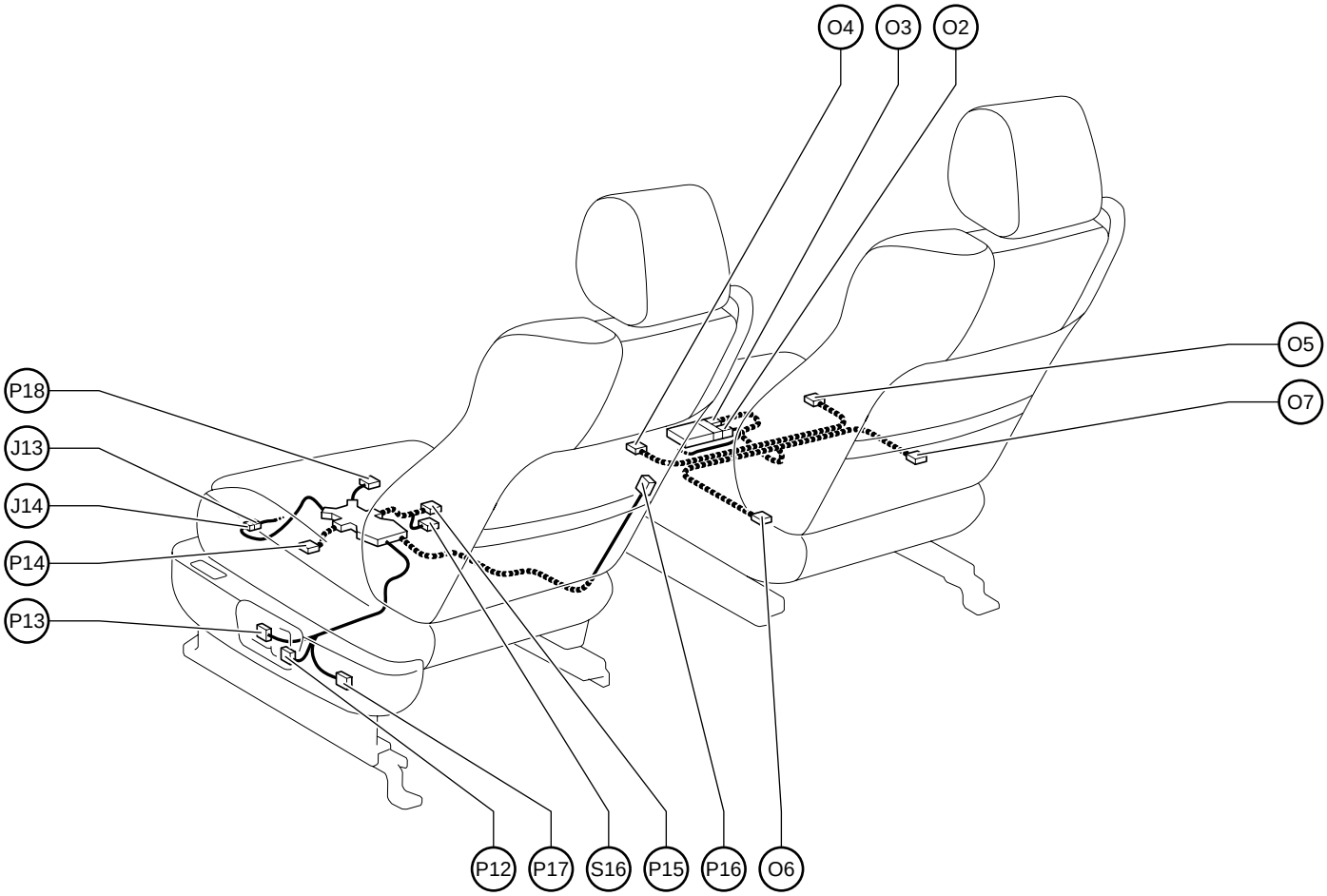

J 13 Junction Connector
J 14 Junction Connector

O 2 Occupant Classification ECU
O 3 Occupant Classification ECU
O 4 Occupant Classification Sensor Front LH
O 5 Occupant Classification Sensor Front RH
O 6 Occupant Classification Sensor Rear LH
O 7 Occupant Classification Sensor Rear RH

P 12 Power Seat Control SW (Driver's Seat Lumbar Support Control)
P 13 Power Seat Control SW (Driver's Seat)
P 14 Power Seat Motor (Driver's Seat Front Vertical Control)
P 15 Power Seat Motor (Driver's Seat Lifter Control)
P 16 Power Seat Motor (Driver's Seat Lumbar Support Control)
P 17 Power Seat Motor (Driver's Seat Reclining Control)
P 18 Power Seat Motor (Driver's Seat Slide Control)

S 16 Seat Heater (Driver's Seat)

▭	: Location of Connector Joining Wire Harness and Wire Harness
▽	: Location of Ground Points

[3MZ–FE]

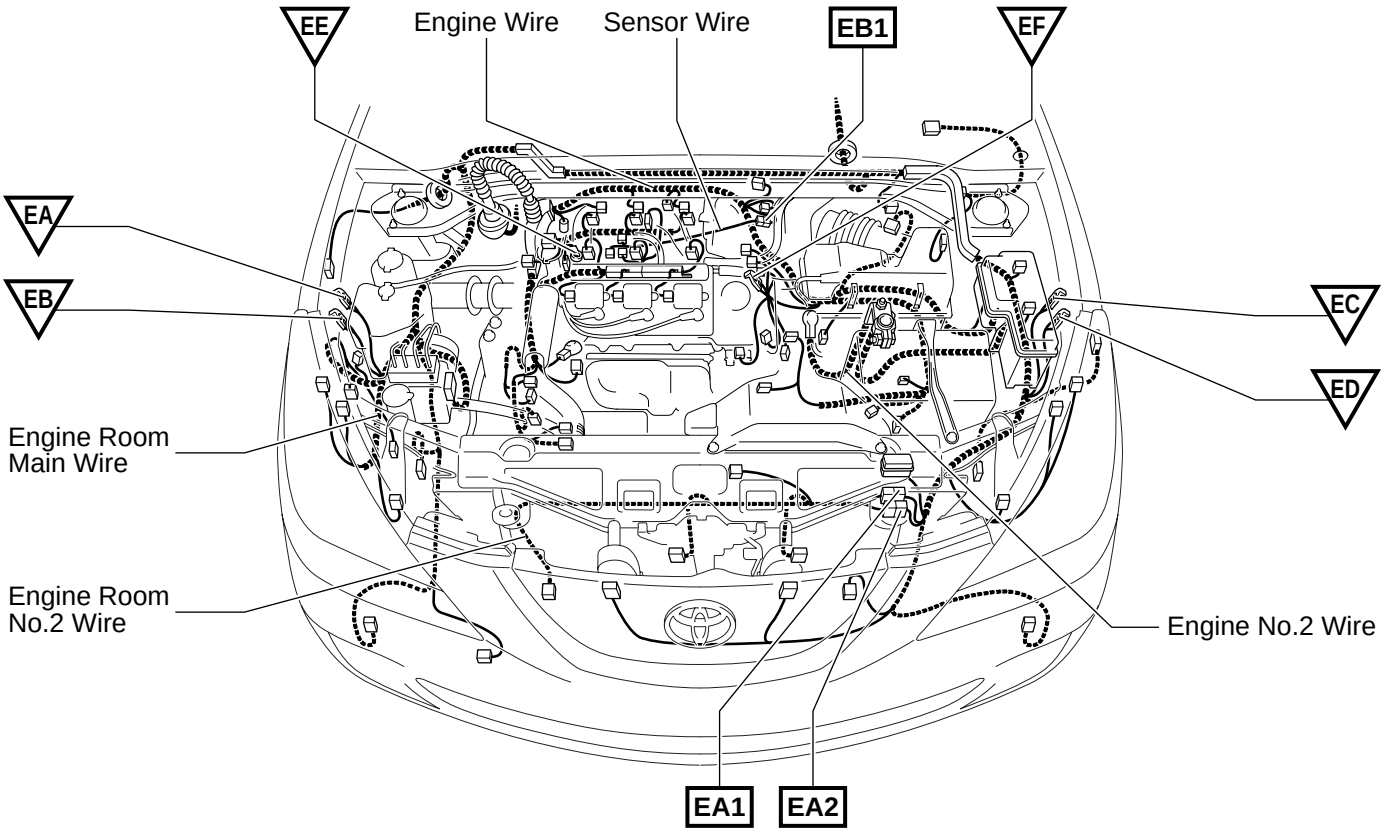

▭ : Location of Connector Joining Wire Harness and Wire Harness
▽ : Location of Ground Points

[2AZ–FE]

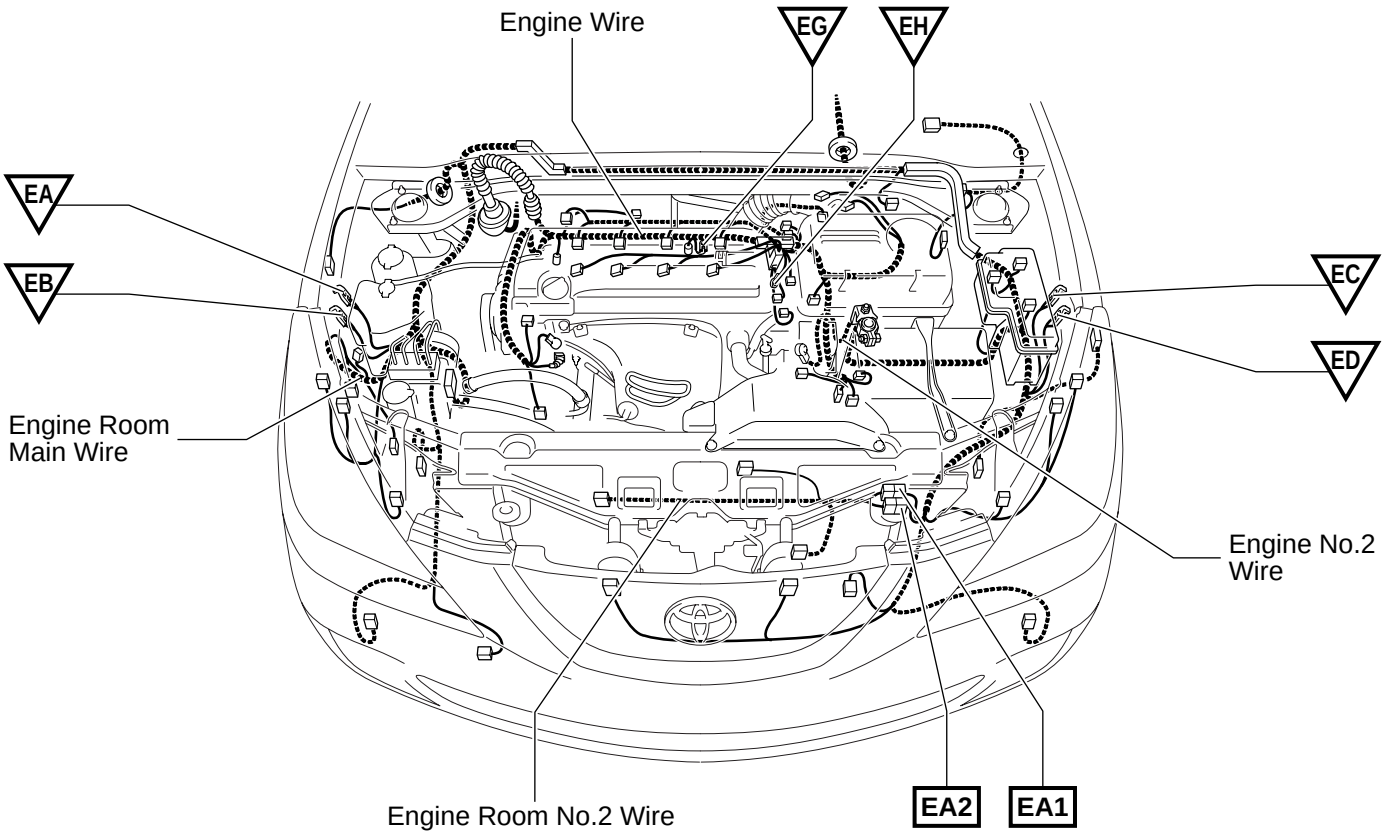

▭ : Location of Connector Joining Wire Harness and Wire Harness

[C/P]

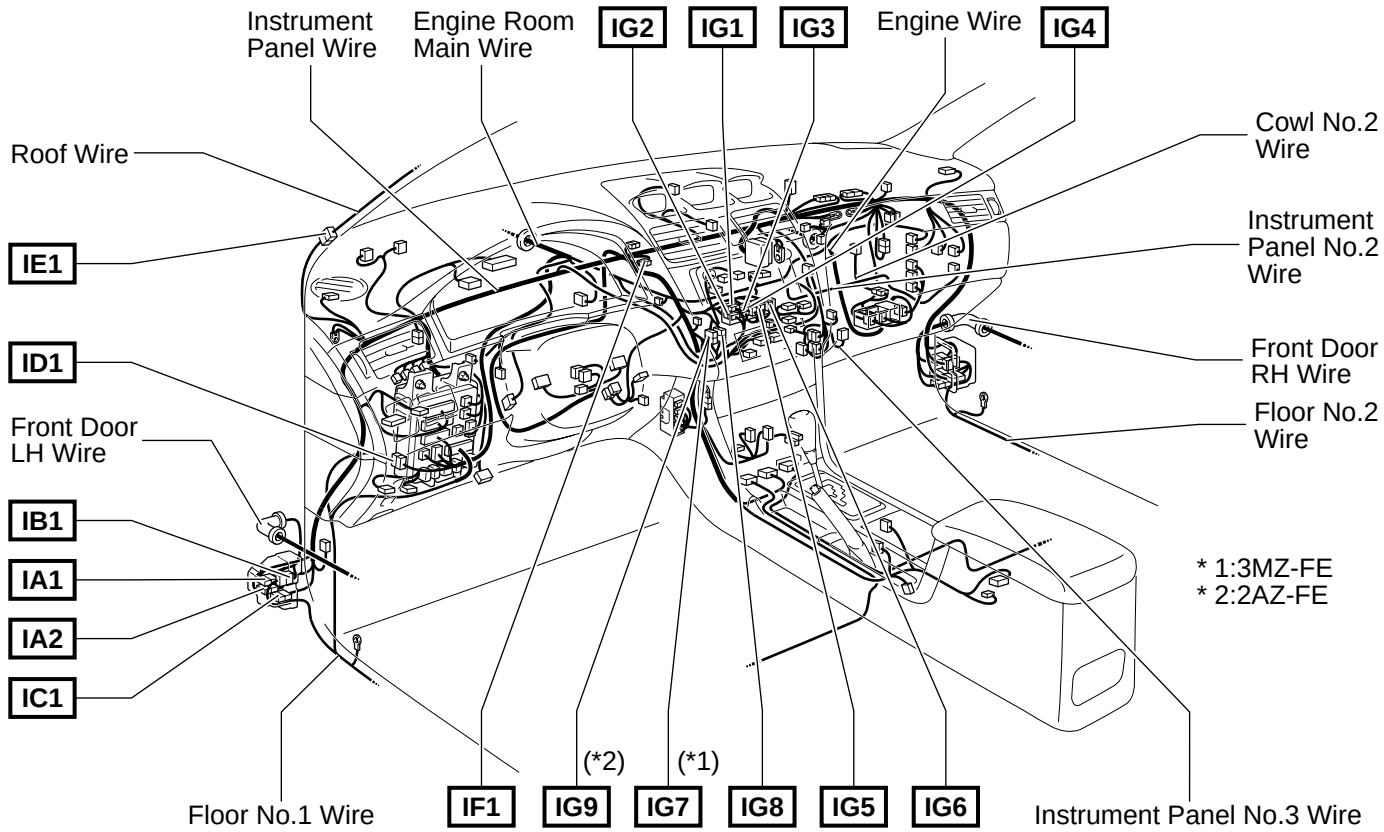

▽ : Location of Ground Points

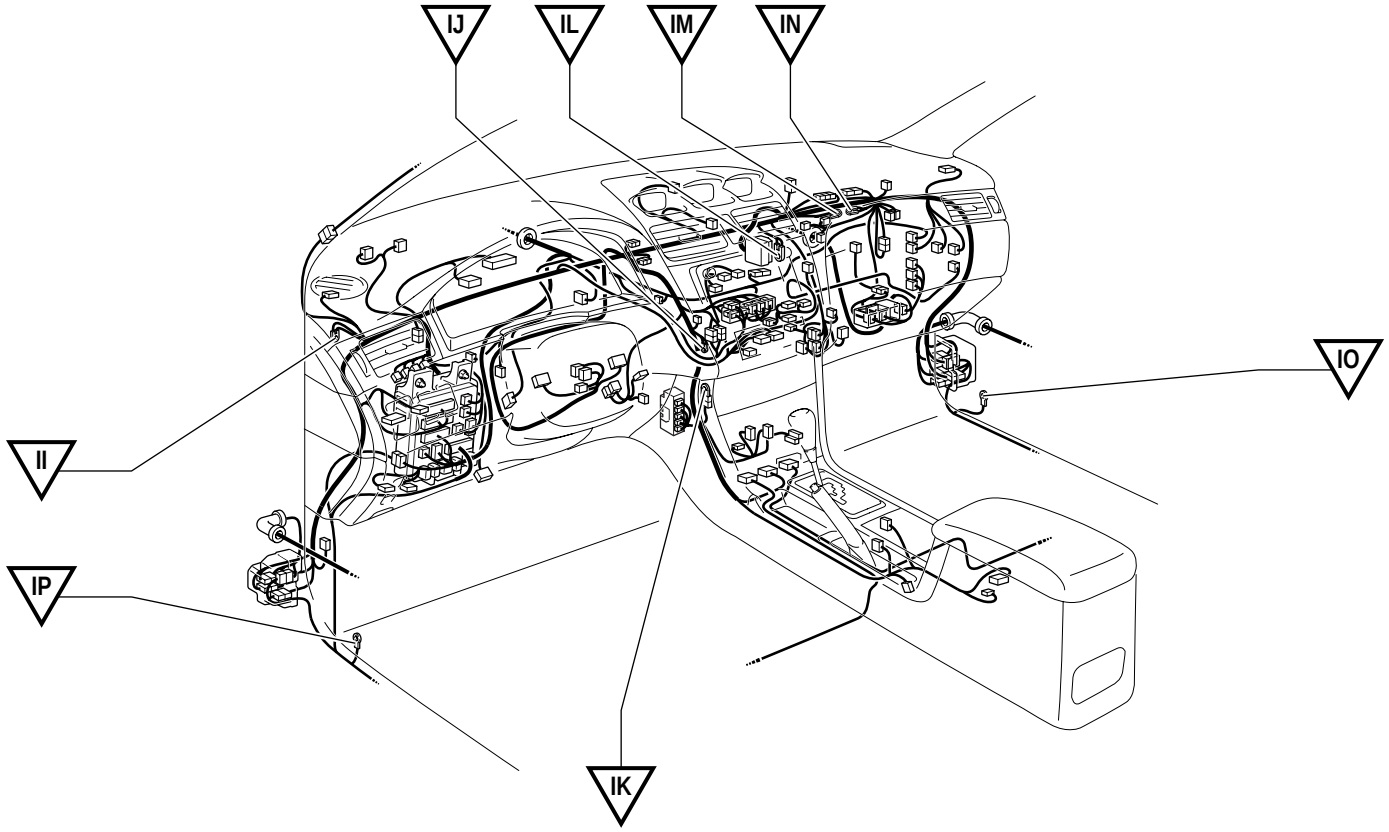

▭ : Location of Connector Joining Wire Harness and Wire Harness

[C/P]

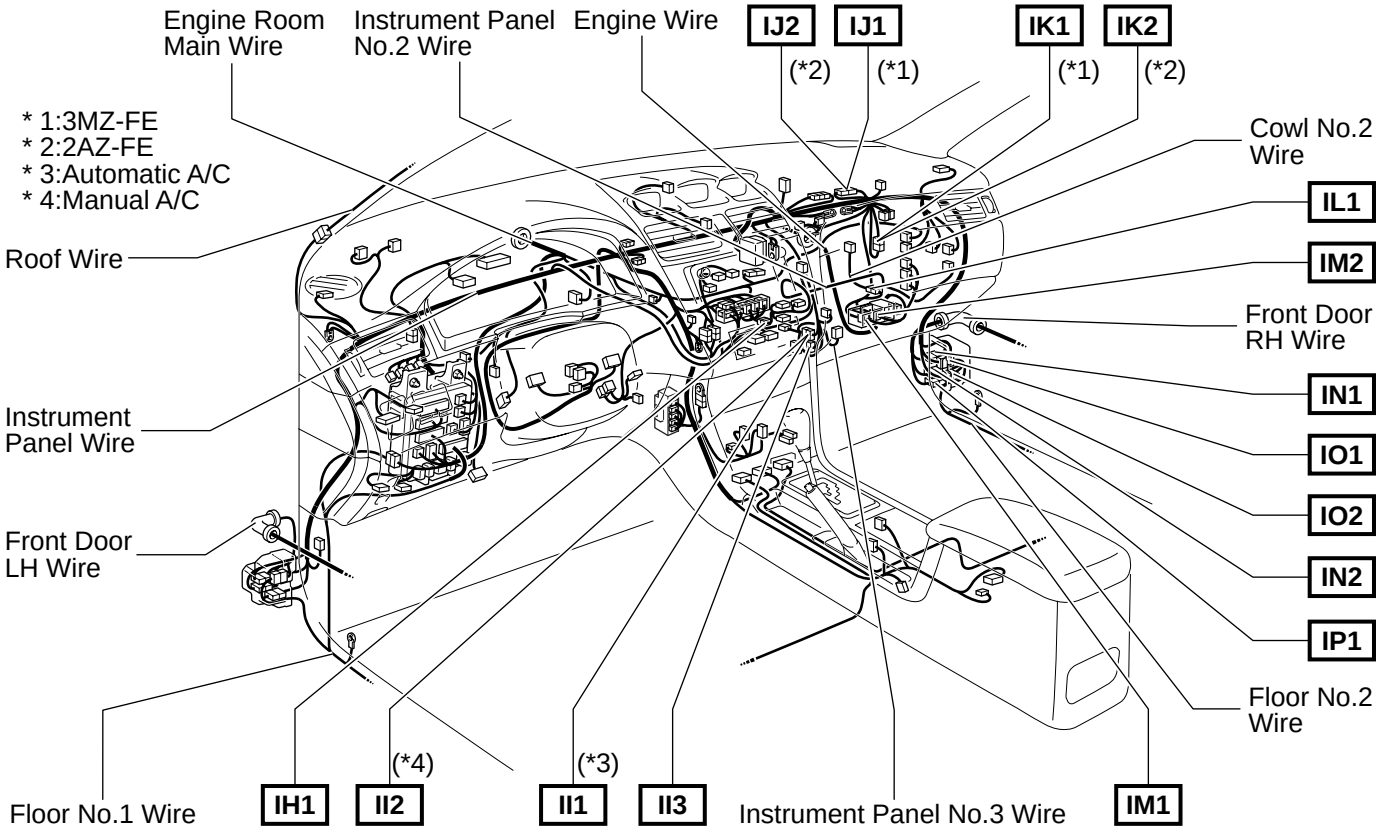

▭ : Location of Connector Joining Wire Harness and Wire Harness

[Convertible]

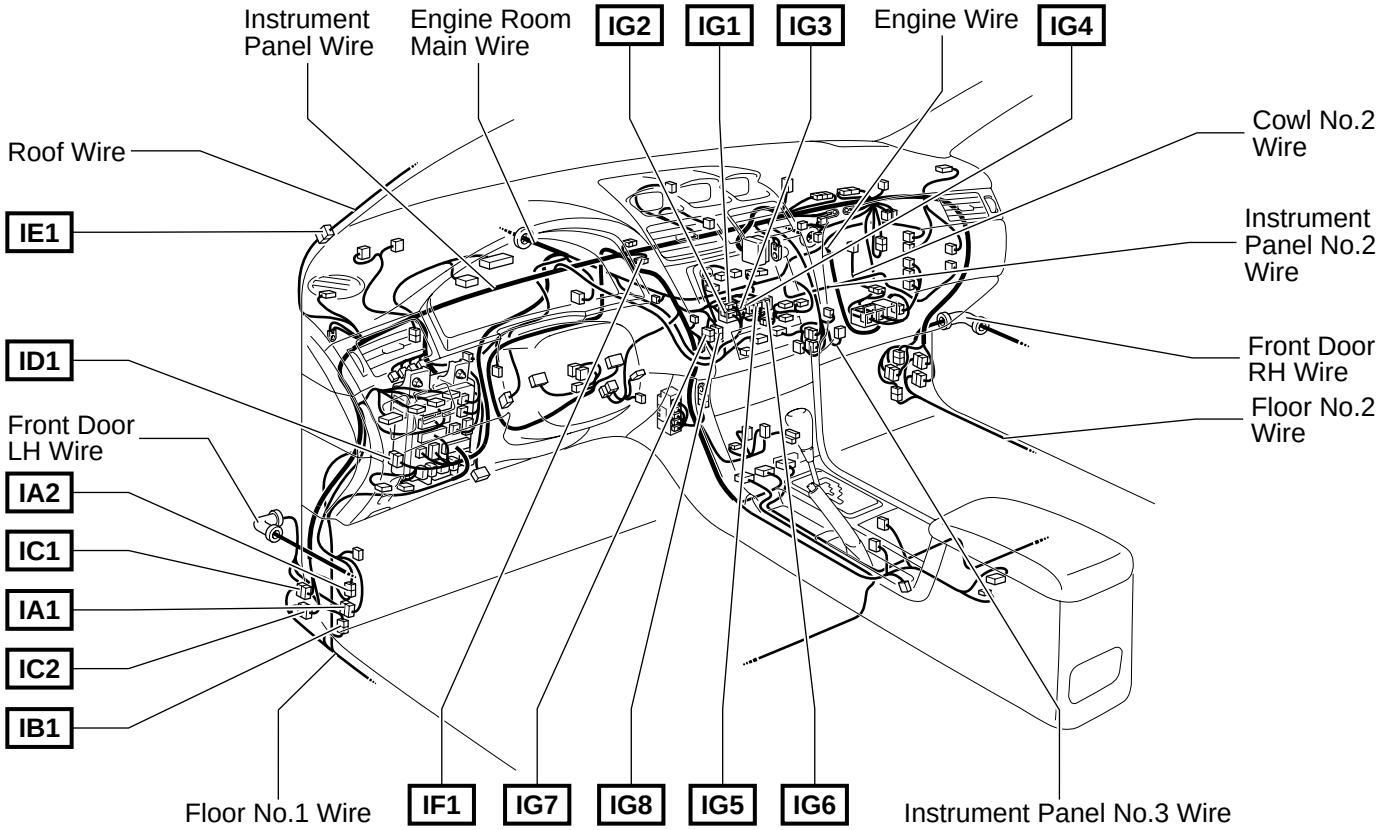

▽ : Location of Ground Points

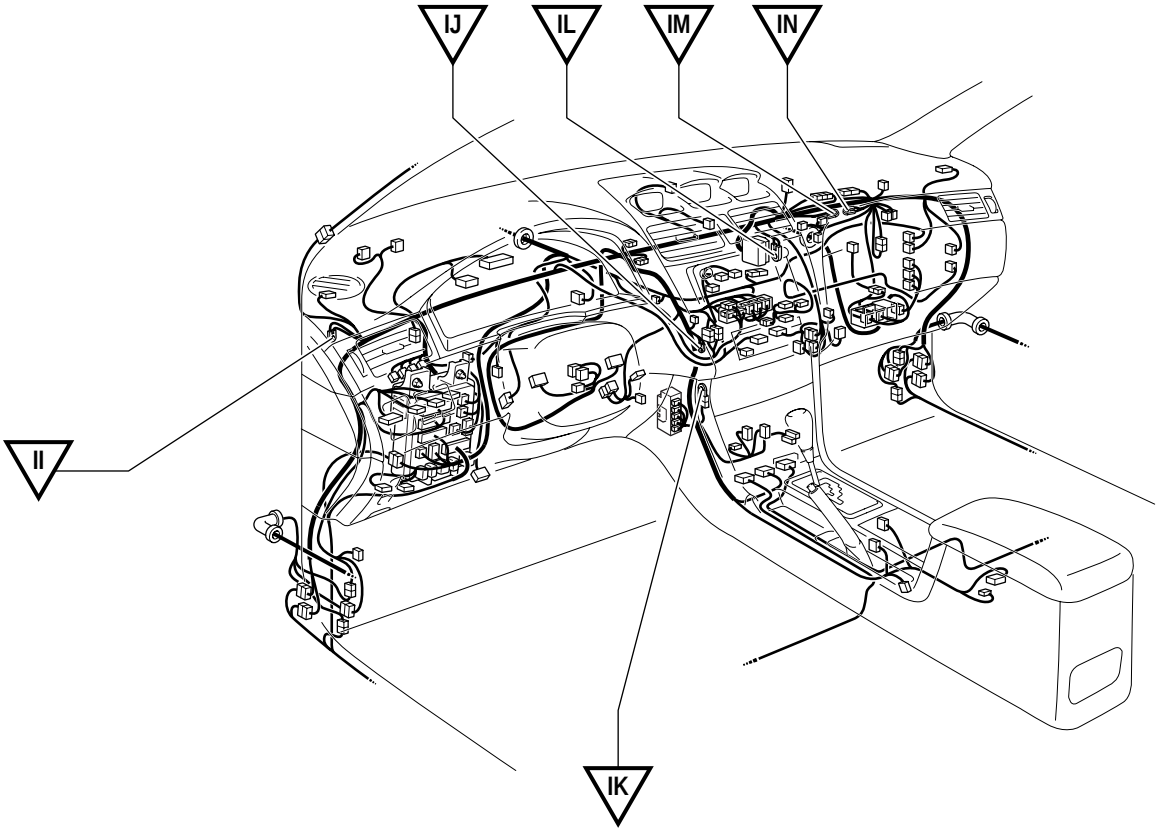

▭ : Location of Connector Joining Wire Harness and Wire Harness

[Convertible]

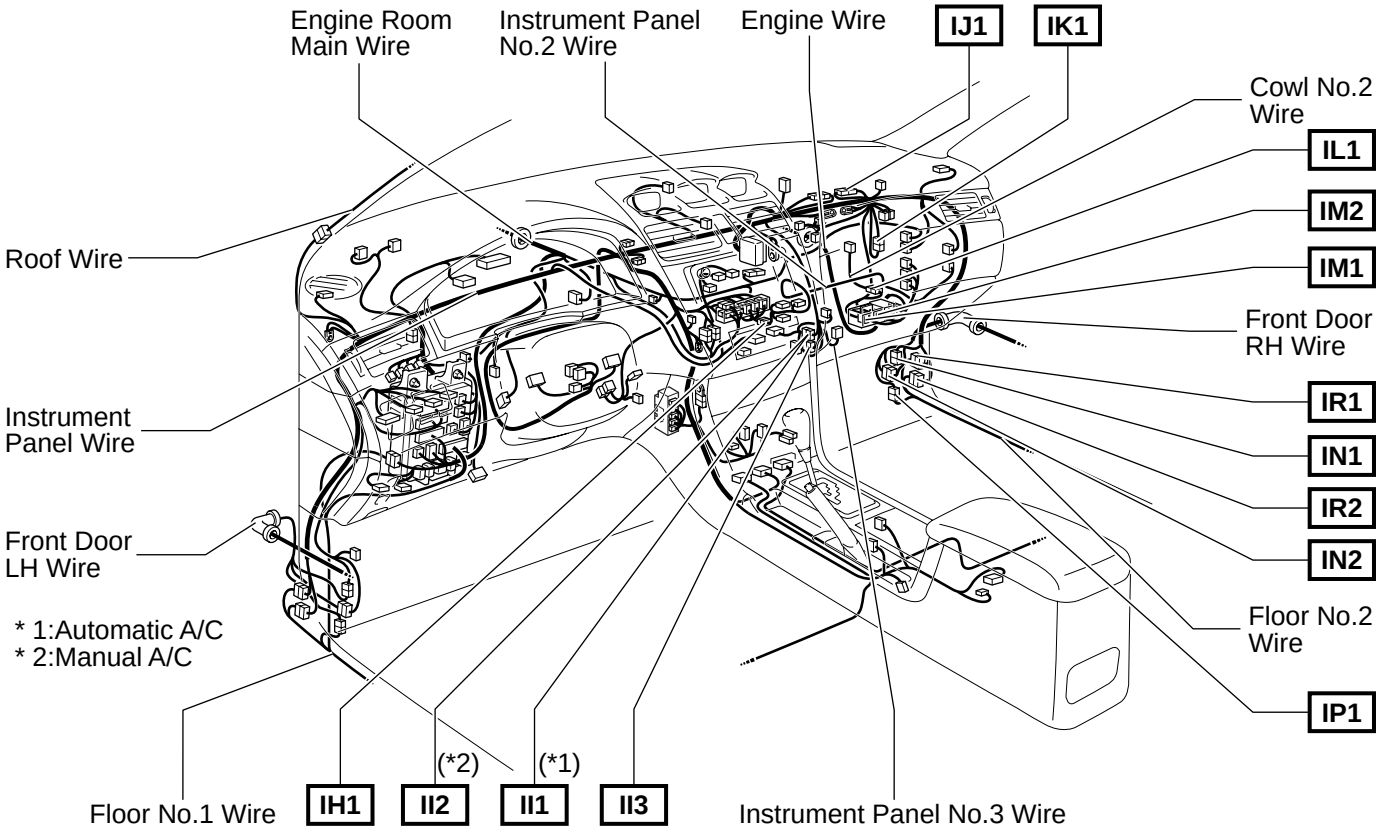

▽ : Location of Ground Points

[C/P]

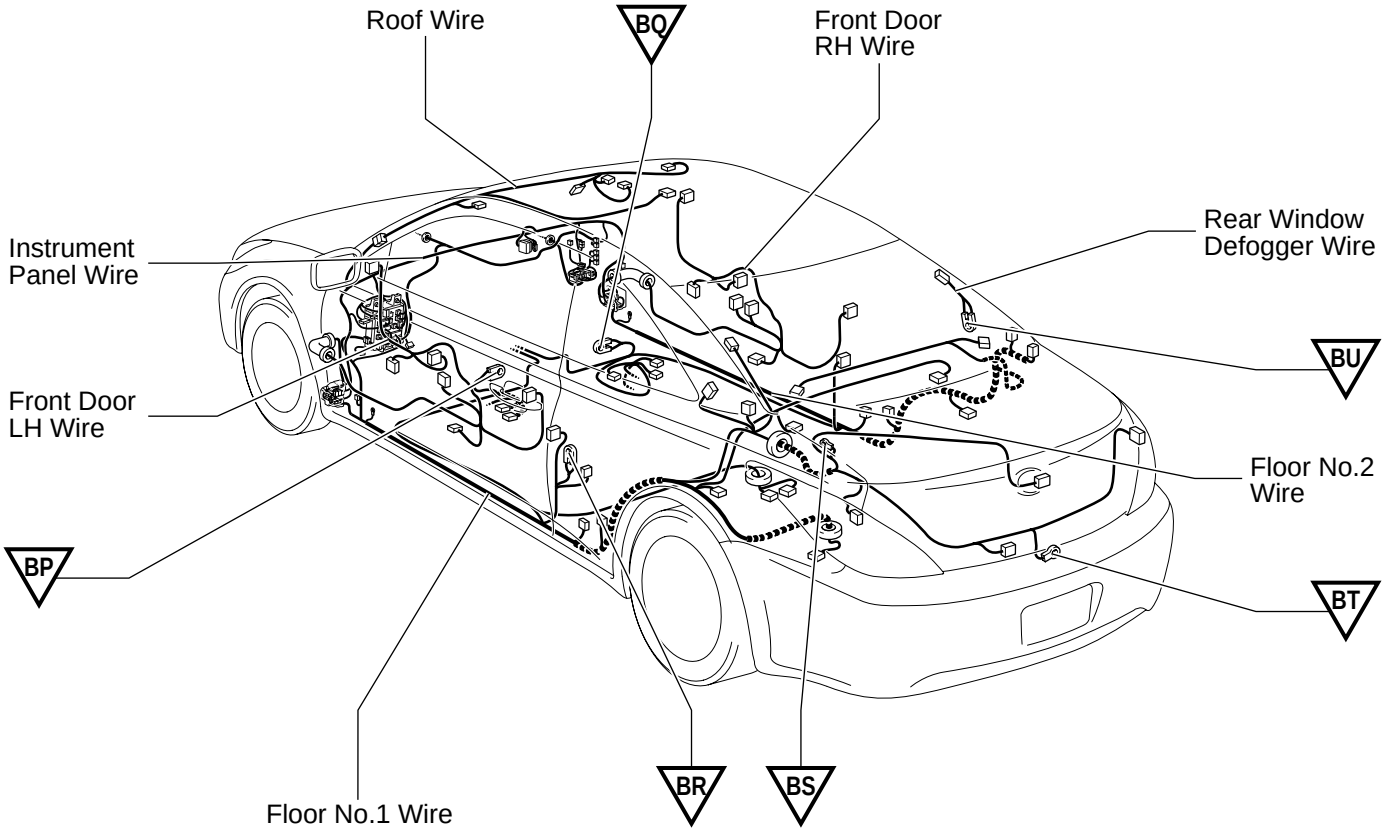

▽ : Location of Ground Points

[Convertible]

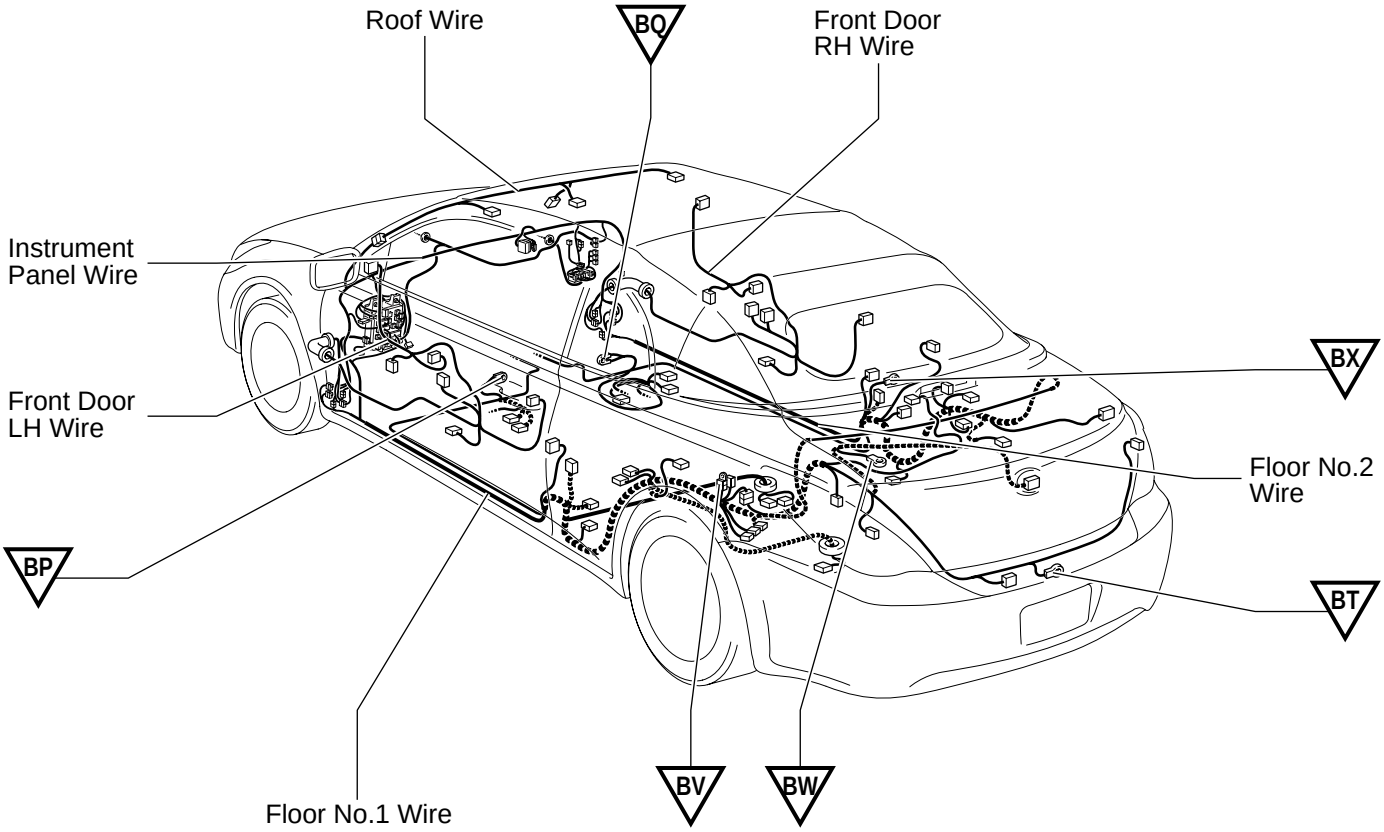

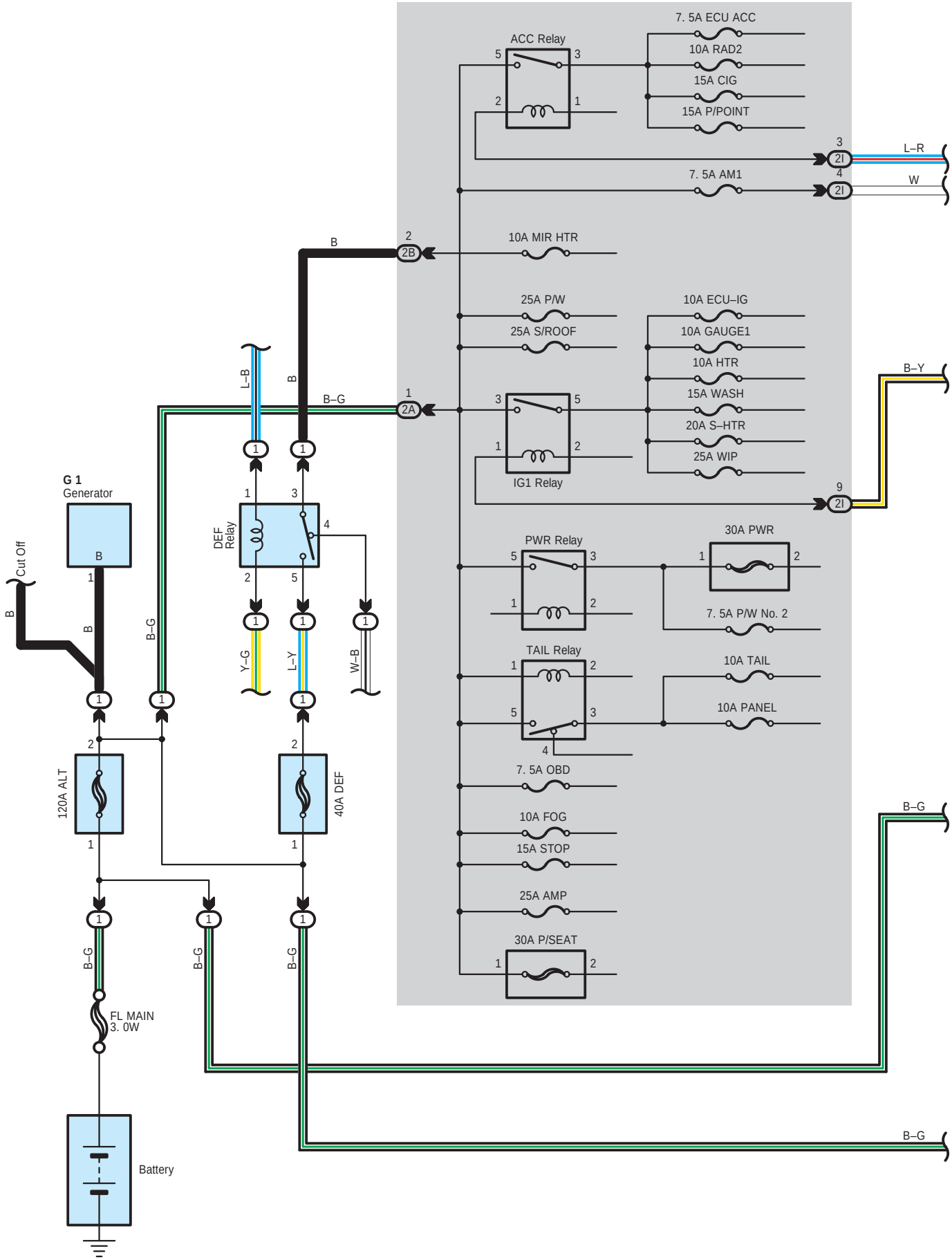
7. 5A ECU ACC
ACC Relay
10A RAD2
15A CIG
15A P/POINT
L–R
7. 5A AM1
W
10A MIR HTR
25A P/W
25A S/ROOF
10A ECU–IG
10A GAUGE1
10A HTR
15A WASH
20A S–HTR
25A WIP
IG1 Relay
B–Y
G 1
Generator
Cut Off
DEF Relay
PWR Relay
30A PWR
7. 5A P/W No. 2
TAIL Relay
10A TAIL
10A PANEL
7. 5A OBD
10A FOG
15A STOP
25A AMP
30A P/SEAT
120A ALT
40A DEF
FL MAIN
3. 0W
Battery
B–G

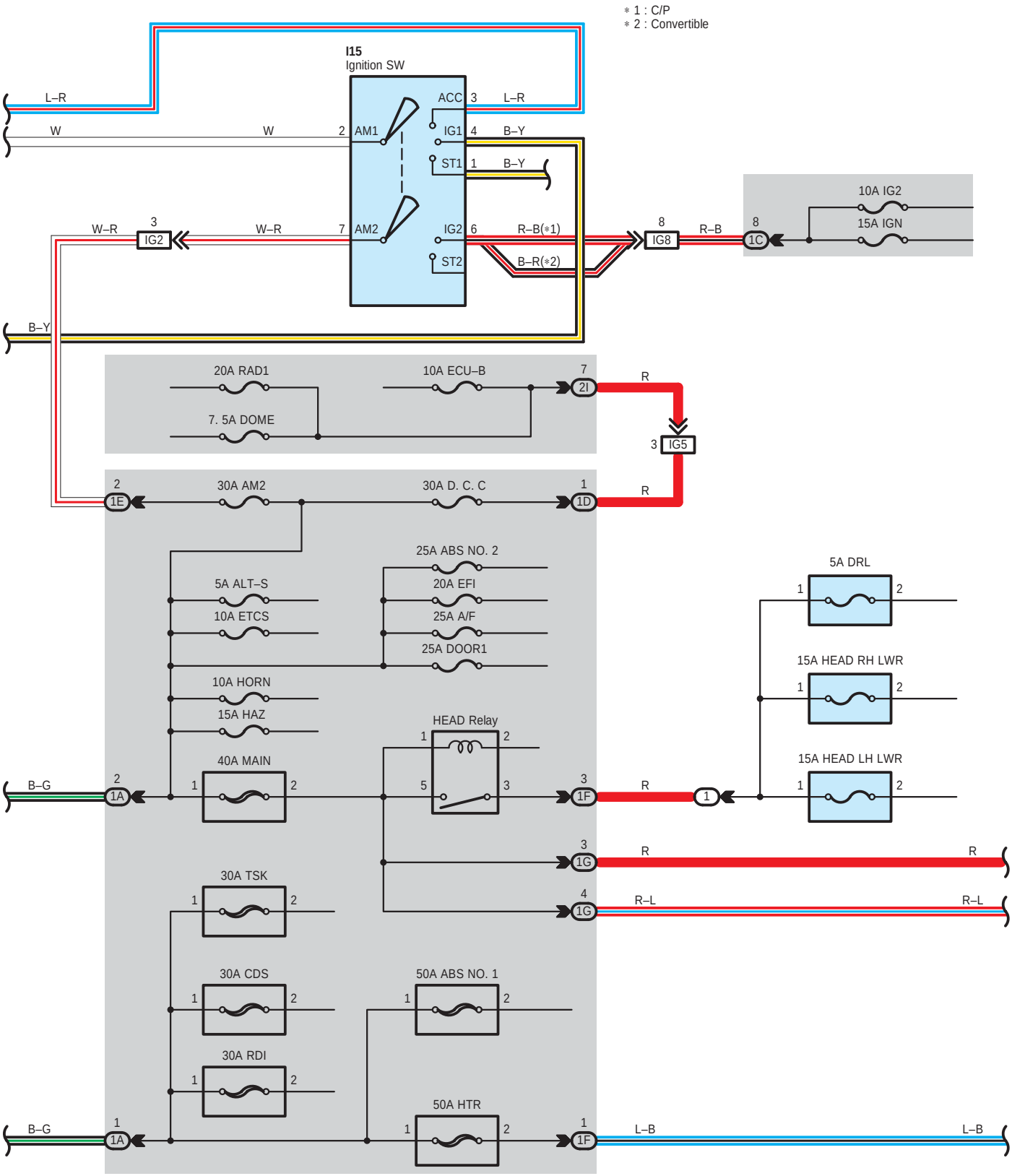
* 1 : C/P
* 2 : Convertible
I15
Ignition SW
ACC
IG1
ST1
AM1
AM2
IG2
ST2
L–R
W
W–R
B–Y
R–B(*1)
B–R(*2)
R–B
IG2
IG8
1C
10A IG2
15A IGN
20A RAD1
7. 5A DOME
10A ECU–B
2I
IG5
R
1E
30A AM2
30A D. C. C
1D
25A ABS NO. 2
5A ALT–S
20A EFI
10A ETCS
25A A/F
25A DOOR1
10A HORN
15A HAZ
HEAD Relay
40A MAIN
B–G
1A
1F
1G
R–L
5A DRL
15A HEAD RH LWR
15A HEAD LH LWR
30A TSK
30A CDS
50A ABS NO. 1
30A RDI
50A HTR
L–B

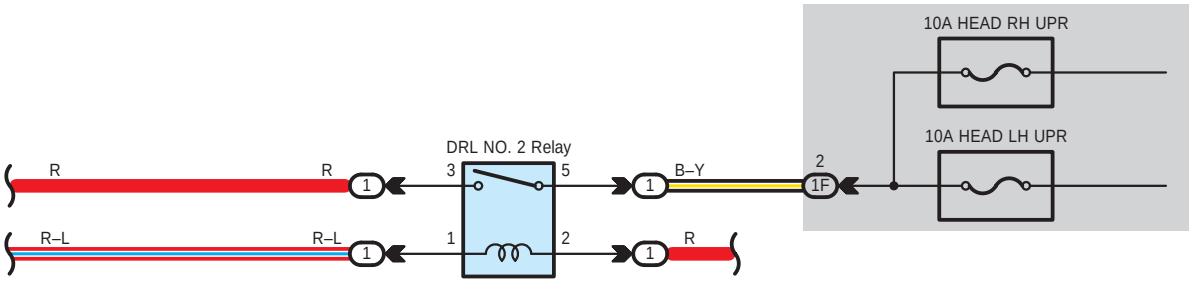
10A HEAD RH UPR
10A HEAD LH UPR
DRL NO. 2 Relay
R
R
3
5
B–Y
2
1F
R–L
R–L
1
2
R

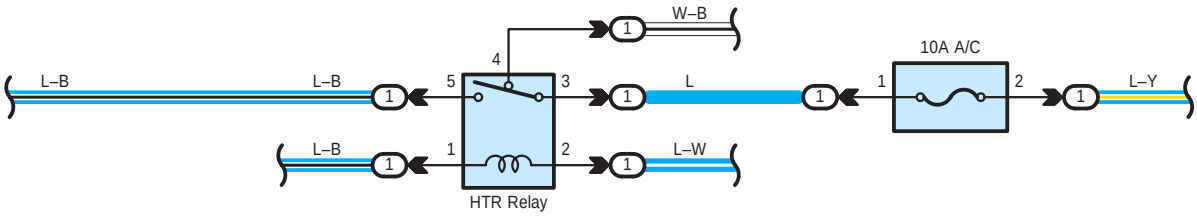
W–B
4
10A A/C
L–B
L–B
5
3
L
1
2
L–Y
L–B
1
2
L–W
HTR Relay

: Parts Location

Code	See Page	Code	See Page	Code	See Page
G1	40 (3MZ–FE)	I15	45 (C/P)		
	42 (2AZ–FE)		47 (*1)		

: Relay Blocks

Code	See Page	Relay Blocks (Relay Block Location)
1	24	Engine Room R/B (Engine Compartment Left)

: Junction Block and Wire Harness Connector

Code	See Page	Junction Block and Wire Harness (Connector Location)
1A	27	Engine Room Main Wire and Engine Room J/B (Engine Compartment Left)
1C		
1D		
1E		
1F		
1G		
2A	30	Engine Room Main Wire and Driver Side J/B (Lower Finish Panel)
2B		
2I	31	Instrument Panel Wire and Driver Side J/B (Lower Finish Panel)

: Connector Joining Wire Harness and Wire Harness

Code	See Page	Joining Wire Harness and Wire Harness (Connector Location)
IG2	56 (C/P)	Engine Room Main Wire and Instrument Panel Wire (Behind the Radio and Player)
	58 (*1)	
IG5	56 (C/P)	
	58 (*1)	
IG8	56 (C/P)	
	58 (*1)	

* 1 : Convertible * 2 : C/P, Convertible w/ VSC * 3 : Convertible w/o VSC

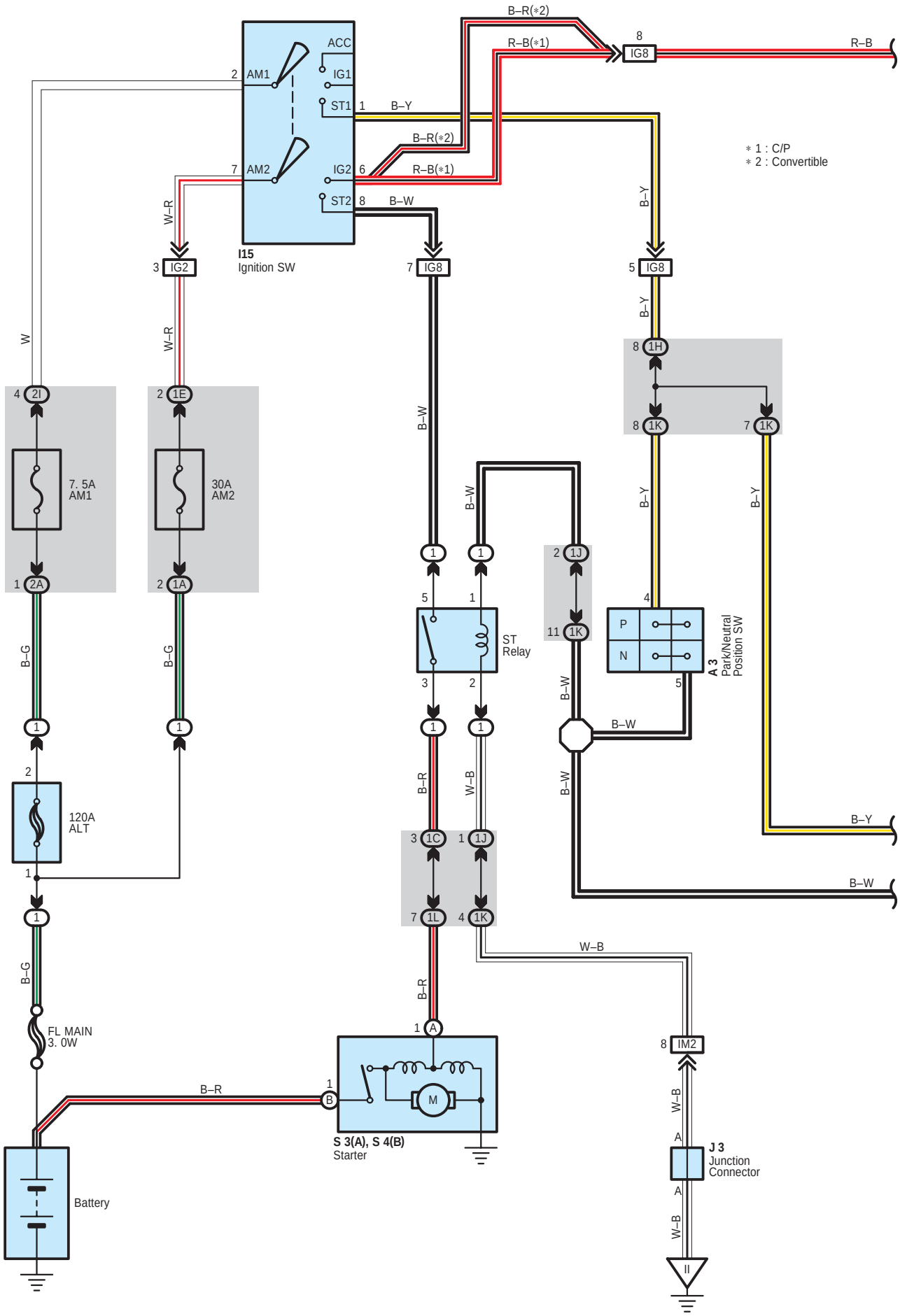
B–R(∗2)
R–B(∗1)
8
IG8
R–B
ACC
2 AM1
IG1
ST1 1
B–Y
B–R(∗2)
7 AM2
IG2 6
R–B(∗1)
ST2 8
B–W
∗ 1 : C/P
∗ 2 : Convertible
W–R
3 IG2
I15
Ignition SW
7 IG8
5 IG8
B–Y
W
W–R
8 1H
4 2I
2 1E
B–W
8 1K
7 1K
7. 5A
AM1
30A
AM2
B–W
B–Y
B–Y
1 2A
2 1A
2 1J
5
1
4
11 1K
P
N
ST
Relay
A 3
Park/Neutral
Position SW
B–G
B–G
3
2
5
B–W
B–W
B–R
W–B
B–W
2
120A
ALT
B–Y
3 1C
1 1J
B–W
7 1L
4 1K
W–B
B–G
B–R
FL MAIN
3. 0W
1 A
8 IM2
B–R
1 B
M
S 3(A), S 4(B)
Starter
W–B
A
J 3
Junction
Connector
A
W–B
Battery
II

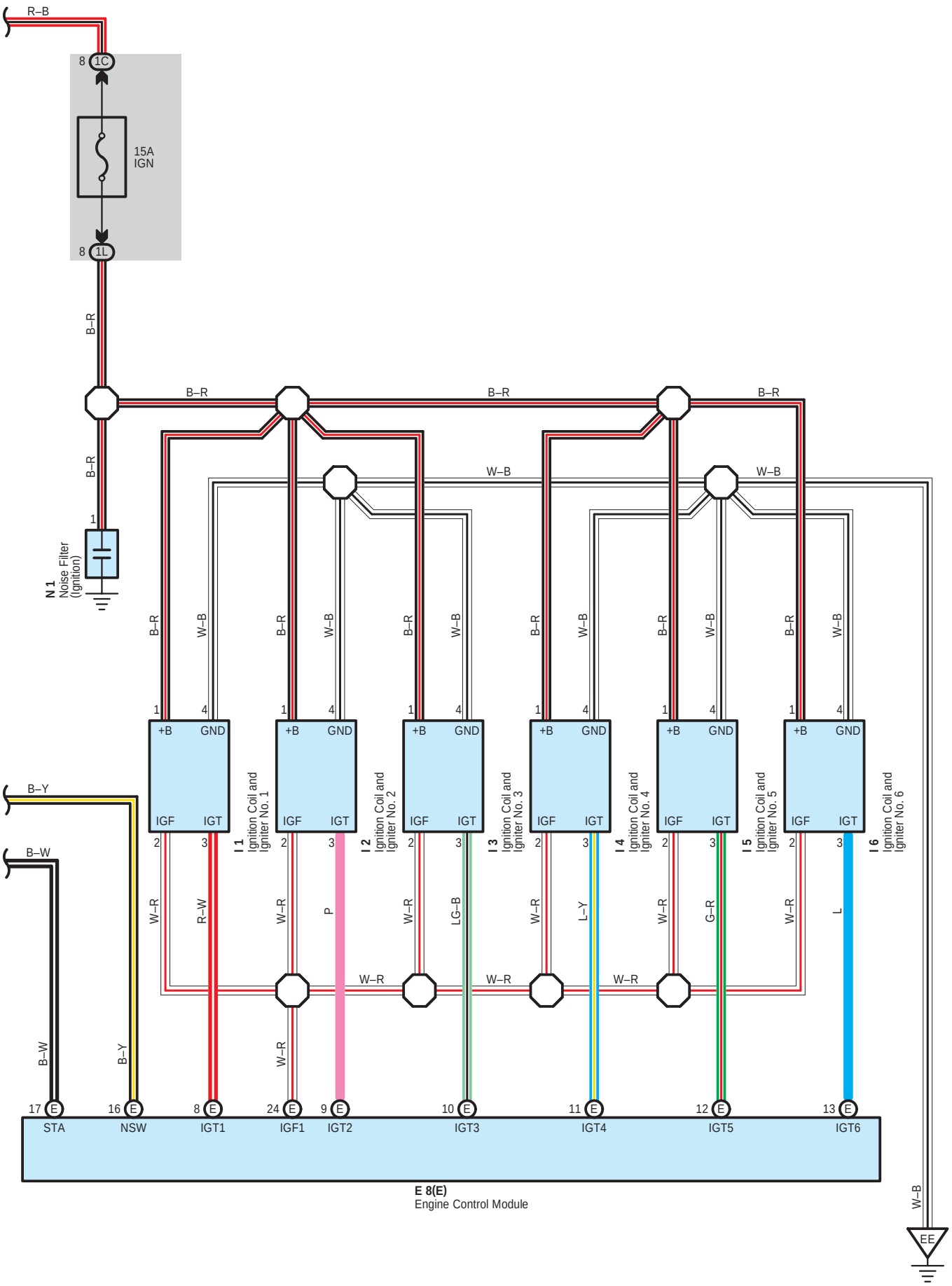
R–B
8 1C
15A
IGN
8 1L
B–R
B–R
B–R
B–R
B–R
W–B
W–B
1
N 1
Noise Filter
(Ignition)
B–R
W–B
1
4
+B
GND
IGF
IGT
2
3
I 1
Ignition Coil and
Igniter No. 1
I 2
Ignition Coil and
Igniter No. 2
I 3
Ignition Coil and
Igniter No. 3
I 4
Ignition Coil and
Igniter No. 4
I 5
Ignition Coil and
Igniter No. 5
I 6
Ignition Coil and
Igniter No. 6
B–Y
B–W
W–R
R–W
P
LG–B
L–Y
G–R
L
W–R
B–W
B–Y
17 E
16 E
8 E
24 E
9 E
10 E
11 E
12 E
13 E
STA
NSW
IGT1
IGF1
IGT2
IGT3
IGT4
IGT5
IGT6
E 8(E)
Engine Control Module
W–B
EE

: Parts Location

Code		See Page	Code	See Page	Code		See Page
A3		40 (3MZ–FE)	I4	41 (3MZ–FE)	J3		47 (*1)
E8	E	44 (C/P)	I5	41 (3MZ–FE)	N1		41 (3MZ–FE)
		46 (*1)	I6	41 (3MZ–FE)	S3	A	41 (3MZ–FE)
I1		41 (3MZ–FE)	I15	45 (C/P)	S4	B	41 (3MZ–FE)
I2		41 (3MZ–FE)		47 (*1)			
I3		41 (3MZ–FE)	J3	45 (C/P)			

: Relay Blocks

Code	See Page	Relay Blocks (Relay Block Location)
1	24	Engine Room R/B (Engine Compartment Left)

: Junction Block and Wire Harness Connector

Code	See Page	Junction Block and Wire Harness (Connector Location)
1A	27	Engine Room Main Wire and Engine Room J/B (Engine Compartment Left)
1C		
1E		
1H		
1J		
1K	27	Engine Wire and Engine Room J/B (Engine Compartment Left)
1L		
2A	30	Engine Room Main Wire and Driver Side J/B (Lower Finish Panel)
2I	31	Instrument Panel Wire and Driver Side J/B (Lower Finish Panel)

: Connector Joining Wire Harness and Wire Harness

Code	See Page	Joining Wire Harness and Wire Harness (Connector Location)
IG2	56 (C/P)	Engine Room Main Wire and Instrument Panel Wire (Behind the Radio and Player)
	58 (*1)	
IG8	56 (C/P)	
	58 (*1)	
IM2	57 (C/P)	Engine Wire and Instrument Panel Wire (Behind the Glove Box)
	59 (*1)	

: Ground Points

Code	See Page	Ground Points Location
EE	54 (3MZ–FE)	Right Side of Cylinder Head
II	56 (C/P)	Cowl Side Panel LH
	58 (*1)	

* 1 : Convertible * 2 : C/P, Convertible w/ VSC * 3 : Convertible w/o VSC

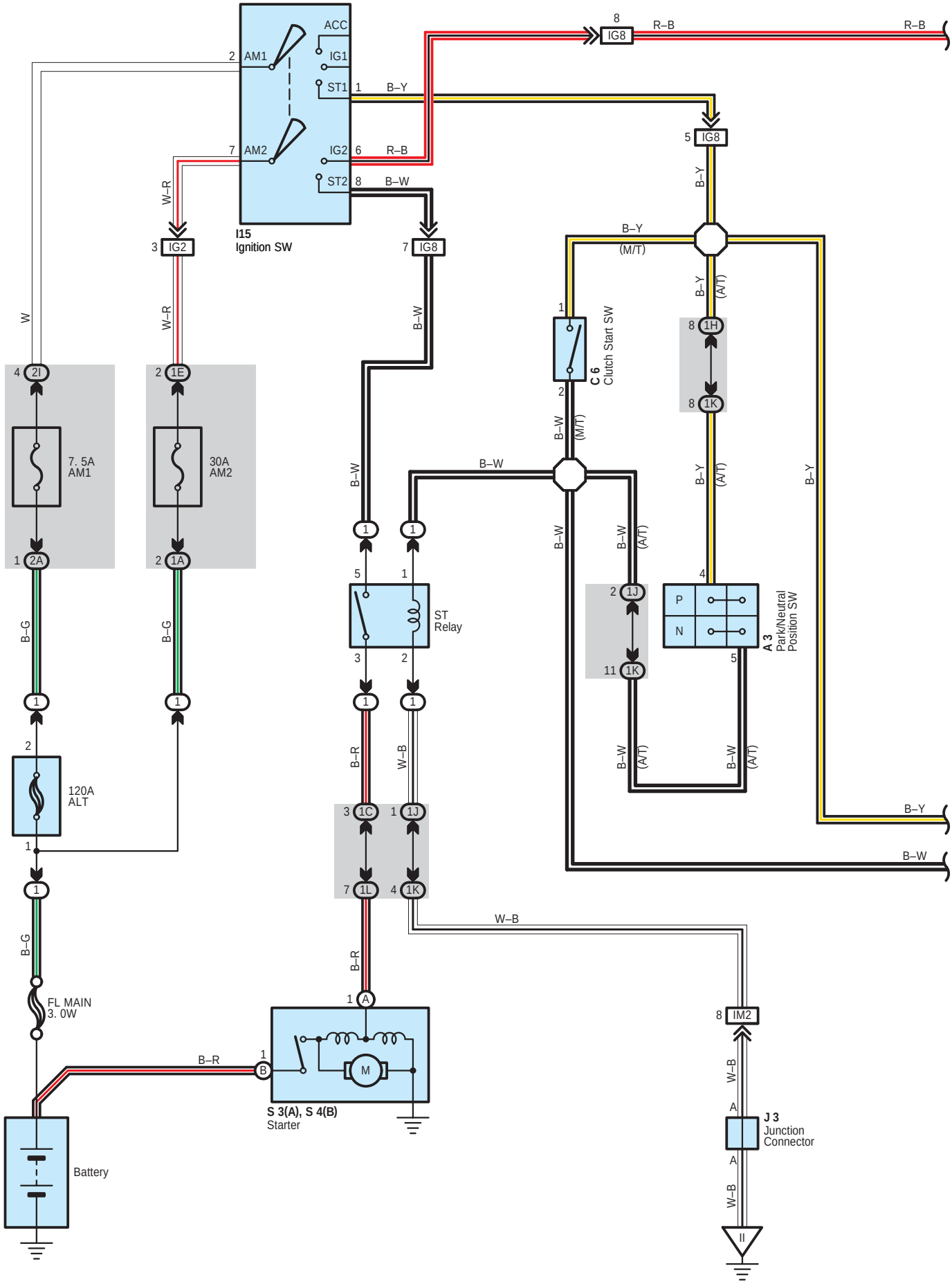
I15
Ignition SW
ACC
IG1
ST1
IG2
ST2
AM1
AM2
IG8
IG2
IM2
R–B
B–Y
B–W
W–R
W
B–G
B–R
W–B
(M/T)
(A/T)
7. 5A
AM1
30A
AM2
120A
ALT
FL MAIN
3. 0W
Battery
S 3(A), S 4(B)
Starter
ST
Relay
C 6
Clutch Start SW
A 3
Park/Neutral
Position SW
P
N
J 3
Junction
Connector

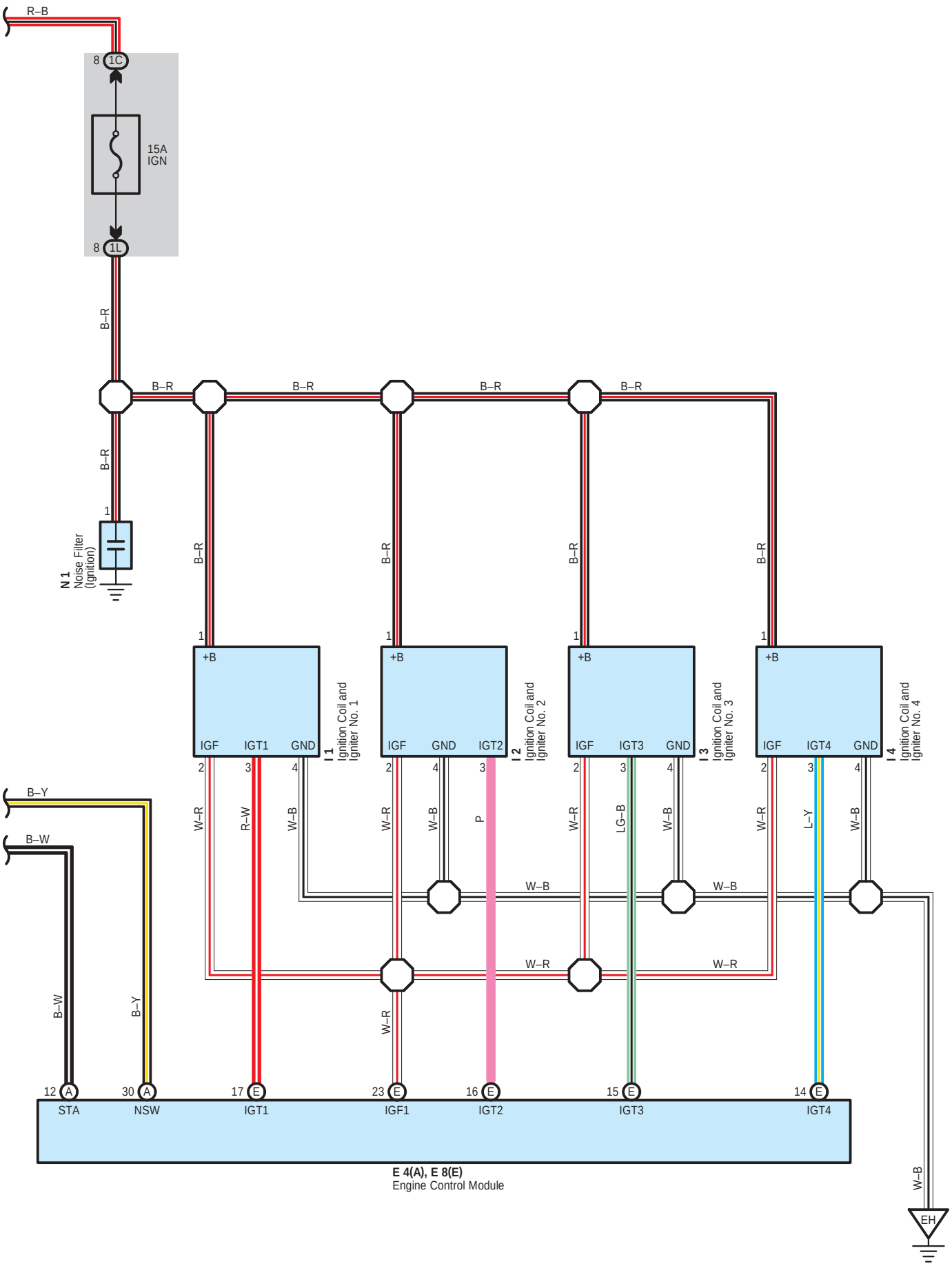
R–B
8 1C
15A
IGN
8 1L
B–R
B–R
B–R
B–R
B–R
B–R
1
N 1
Noise Filter
(Ignition)
B–R
B–R
B–R
B–R
1
+B
IGF
IGT1
GND
I 1
Ignition Coil and
Igniter No. 1
1
+B
IGF
GND
IGT2
I 2
Ignition Coil and
Igniter No. 2
1
+B
IGF
IGT3
GND
I 3
Ignition Coil and
Igniter No. 3
1
+B
IGF
IGT4
GND
I 4
Ignition Coil and
Igniter No. 4
B–Y
B–W
W–R
R–W
W–B
W–R
W–B
P
W–R
LG–B
W–B
W–R
L–Y
W–B
W–B
W–B
W–R
W–R
W–R
B–W
B–Y
12 A
STA
30 A
NSW
17 E
IGT1
23 E
IGF1
16 E
IGT2
15 E
IGT3
14 E
IGT4
E 4(A), E 8(E)
Engine Control Module
W–B
EH

: Parts Location

Code		See Page	Code	See Page	Code		See Page
A3		42 (2AZ–FE)	I2	43 (2AZ–FE)	N1		43 (2AZ–FE)
C6		44 (C/P)	I3	43 (2AZ–FE)	S3	A	43 (2AZ–FE)
E4	A	44 (C/P)	I4	43 (2AZ–FE)	S4	B	43 (2AZ–FE)
E8	E	44 (C/P)	I15	45 (C/P)			
I1		43 (2AZ–FE)	J3	45 (C/P)			

: Relay Blocks

Code	See Page	Relay Blocks (Relay Block Location)
1	24	Engine Room R/B (Engine Compartment Left)

: Junction Block and Wire Harness Connector

Code	See Page	Junction Block and Wire Harness (Connector Location)
1A	27	Engine Room Main Wire and Engine Room J/B (Engine Compartment Left)
1C		
1E		
1H		
1J		
1K	27	Engine Wire and Engine Room J/B (Engine Compartment Left)
1L		
2A	30	Engine Room Main Wire and Driver Side J/B (Lower Finish Panel)
2I	31	Instrument Panel Wire and Driver Side J/B (Lower Finish Panel)

: Connector Joining Wire Harness and Wire Harness

Code	See Page	Joining Wire Harness and Wire Harness (Connector Location)
IG2	56 (C/P)	Engine Room Main Wire and Instrument Panel Wire (Behind the Radio and Player)
IG8		
IM2	57 (C/P)	Engine Wire and Instrument Panel Wire (Behind the Glove Box)

: Ground Points

Code	See Page	Ground Points Location
EH	55 (2AZ–FE)	Left Side of Cylinder Head
II	56 (C/P)	Cowl Side Panel LH

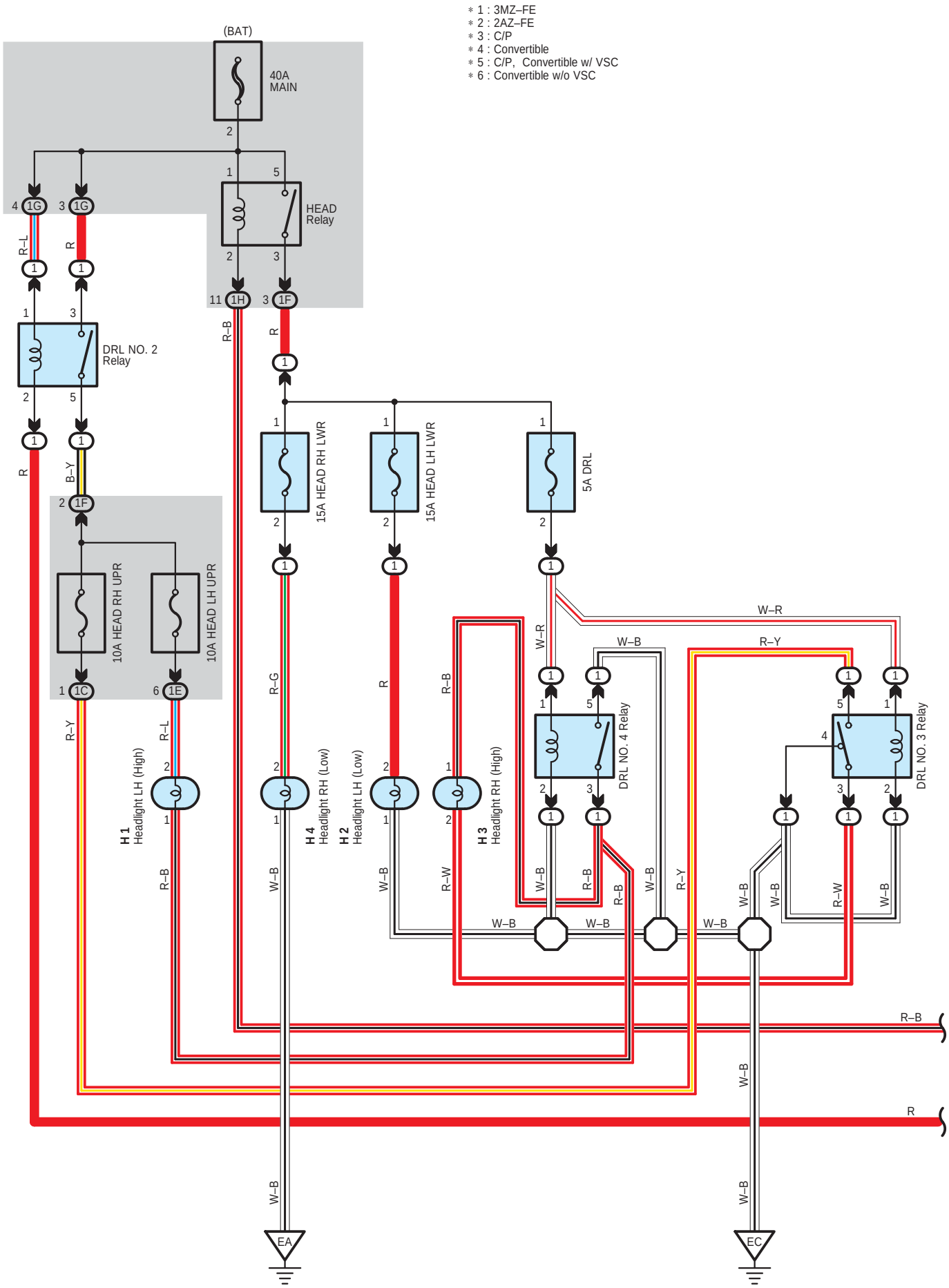
* 1 : 3MZ–FE
* 2 : 2AZ–FE
* 3 : C/P
* 4 : Convertible
* 5 : C/P, Convertible w/ VSC
* 6 : Convertible w/o VSC
(BAT)
40A MAIN
HEAD Relay
DRL NO. 2 Relay
15A HEAD RH LWR
15A HEAD LH LWR
5A DRL
10A HEAD RH UPR
10A HEAD LH UPR
DRL NO. 4 Relay
DRL NO. 3 Relay
H 1 Headlight LH (High)
H 4 Headlight RH (Low)
H 2 Headlight LH (Low)
H 3 Headlight RH (High)
EA
EC

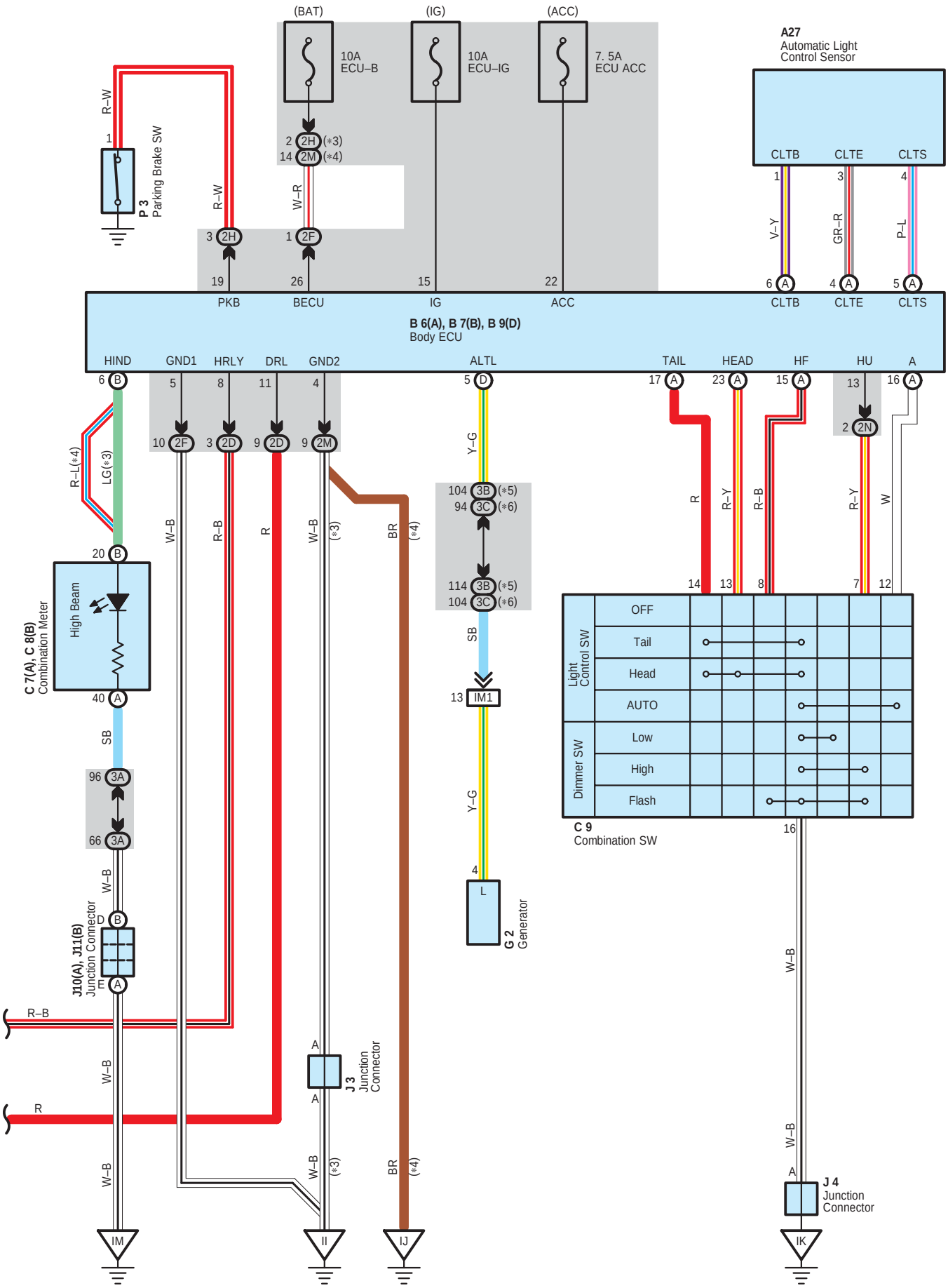
(BAT)
(IG)
(ACC)
10A ECU–B
10A ECU–IG
7. 5A ECU ACC
A27 Automatic Light Control Sensor
CLTB
CLTE
CLTS
P 3 Parking Brake SW
PKB
BECU
IG
ACC
B 6(A), B 7(B), B 9(D) Body ECU
HIND
GND1
HRLY
DRL
GND2
ALTL
TAIL
HEAD
HF
HU
C 7(A), C 8(B) Combination Meter
High Beam
J10(A), J11(B) Junction Connector
J 3 Junction Connector
G 2 Generator
C 9 Combination SW
Light Control SW
Dimmer SW
OFF
Tail
Head
AUTO
Low
High
Flash
J 4 Junction Connector
IM
II
IJ
IK

System Outline

Daytime Running Light Operation

When the engine is started, a signal from the generator is input into TERMINAL (D) 5 of the body ECU. At this time, if the parking brake pedal is depressed (Parking brake SW ON), the body ECU is not activated, and the daytime running light system does not operate.

When the parking brake pedal or parking lever is released (Parking brake SW OFF), a signal is input into TERMINAL 19 of the body ECU. This activates the body ECU and the headlight turns on.

: Parts Location

Code		See Page	Code	See Page	Code		See Page
A27		44 (C/P)	C9	44 (C/P)	J3		45 (C/P)
		46 (*1)		46 (*1)			47 (*1)
B6	A	44 (C/P)	G2	40 (3MZ–FE)	J4		45 (C/P)
		46 (*1)		42 (2AZ–FE)			47 (*1)
B7	B	44 (C/P)	H1	40 (3MZ–FE)	J10	A	45 (C/P)
		46 (*1)		42 (2AZ–FE)			47 (*1)
B9	D	44 (C/P)	H2	40 (3MZ–FE)	J11	B	45 (C/P)
		46 (*1)		42 (2AZ–FE)			47 (*1)
C7	A	44 (C/P)	H3	40 (3MZ–FE)	P3		45 (C/P)
		46 (*1)		42 (2AZ–FE)			47 (*1)
C8	B	44 (C/P)	H4	40 (3MZ–FE)			
		46 (*1)		42 (2AZ–FE)			

: Relay Blocks

Code	See Page	Relay Blocks (Relay Block Location)
1	24	Engine Room R/B (Engine Compartment Left)

: Junction Block and Wire Harness Connector

Code	See Page	Junction Block and Wire Harness (Connector Location)
1C	27	Engine Room Main Wire and Engine Room J/B (Engine Compartment Left)
1E		
1F		
1G		
1H		
2D	30	Engine Room Main Wire and Driver Side J/B (Lower Finish Panel)
2F	30	Instrument Panel Wire and Driver Side J/B (Lower Finish Panel)
2H	31	
2M	30	
2N		
3A	36 (*2)	Instrument Panel Wire and Passenger Side J/B (Instrument Panel Brace RH)
	37 (*3)	
3B	36 (*2)	
3C	37 (*3)	

: Connector Joining Wire Harness and Wire Harness

Code	See Page	Joining Wire Harness and Wire Harness (Connector Location)
IM1	57 (C/P)	Engine Wire and Instrument Panel Wire (Behind the Glove Box)
	59 (*1)	

* 1 : Convertible * 2 : C/P, Convertible w/ VSC * 3 : Convertible w/o VSC

▽ : **Ground Points**

Code	See Page	Ground Points Location
EA	54 (3MZ–FE)	Right Fender
	55 (2AZ–FE)	
EC	54 (3MZ–FE)	Left Fender
	55 (2AZ–FE)	
II	56 (C/P)	Cowl Side Panel LH
	58 (*1)	
IJ	58 (*1)	Instrument Panel Brace LH
IK	56 (C/P)	
	58 (*1)	
IM	56 (C/P)	Instrument Panel Reinforcement RH
	58 (*1)	

* 1 : Convertible * 2 : C/P, Convertible w/ VSC * 3 : Convertible w/o VSC

Fog Light

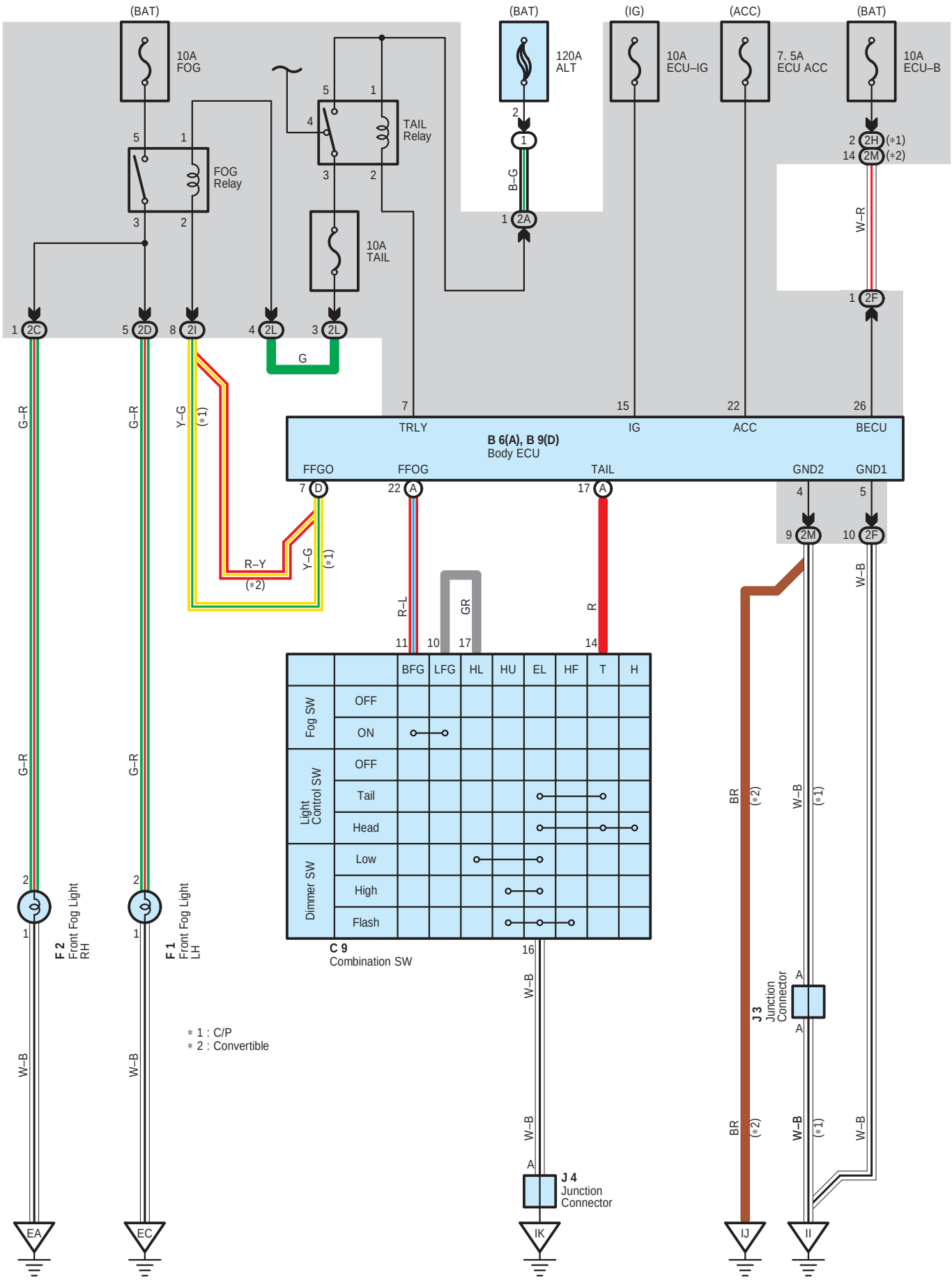
(BAT)
10A FOG
FOG Relay
TAIL Relay
10A TAIL
(BAT)
120A ALT
(IG)
10A ECU–IG
(ACC)
7. 5A ECU ACC
(BAT)
10A ECU–B
B–G
W–R
G
G–R
Y–G
R–Y
R–L
GR
R
W–B
BR
TRLY
IG
ACC
BECU
B 6(A), B 9(D)
Body ECU
FFGO
FFOG
TAIL
GND2
GND1
BFG
LFG
HL
HU
EL
HF
T
H
Fog SW
OFF
ON
Light Control SW
OFF
Tail
Head
Dimmer SW
Low
High
Flash
C 9
Combination SW
F 2
Front Fog Light RH
F 1
Front Fog Light LH
J 3
Junction Connector
J 4
Junction Connector
∗1 : C/P
∗2 : Convertible
EA
EC
IK
IJ
II

○ : Parts Location

Code		See Page	Code	See Page	Code	See Page
B6	A	44 (C/P)	C9	46 (*1)	J3	45 (C/P)
		46 (*1)	F1	40 (3MZ–FE)	J4	45 (C/P)
B9	D	44 (C/P)		42 (2AZ–FE)		47 (*1)
		46 (*1)	F2	40 (3MZ–FE)		
C9		44 (C/P)		42 (2AZ–FE)		

: Relay Blocks

Code	See Page	Relay Blocks (Relay Block Location)
1	24	Engine Room R/B (Engine Compartment Left)

: Junction Block and Wire Harness Connector

Code	See Page	Junction Block and Wire Harness (Connector Location)
2A	30	Engine Room Main Wire and Driver Side J/B (Lower Finish Panel)
2C		
2D		
2F	30	Instrument Panel Wire and Driver Side J/B (Lower Finish Panel)
2H	31	
2I		
2L	30	
2M		

▽ : Ground Points

Code	See Page	Ground Points Location
EA	54 (3MZ–FE)	Right Fender
	55 (2AZ–FE)	
EC	54 (3MZ–FE)	Left Fender
	55 (2AZ–FE)	
II	56 (C/P)	Cowl Side Panel LH
	58 (*1)	
IJ	58 (*1)	Instrument Panel Brace LH
IK	56 (C/P)	
	58 (*1)	

* 1 : Convertible * 2 : C/P, Convertible w/ VSC * 3 : Convertible w/o VSC

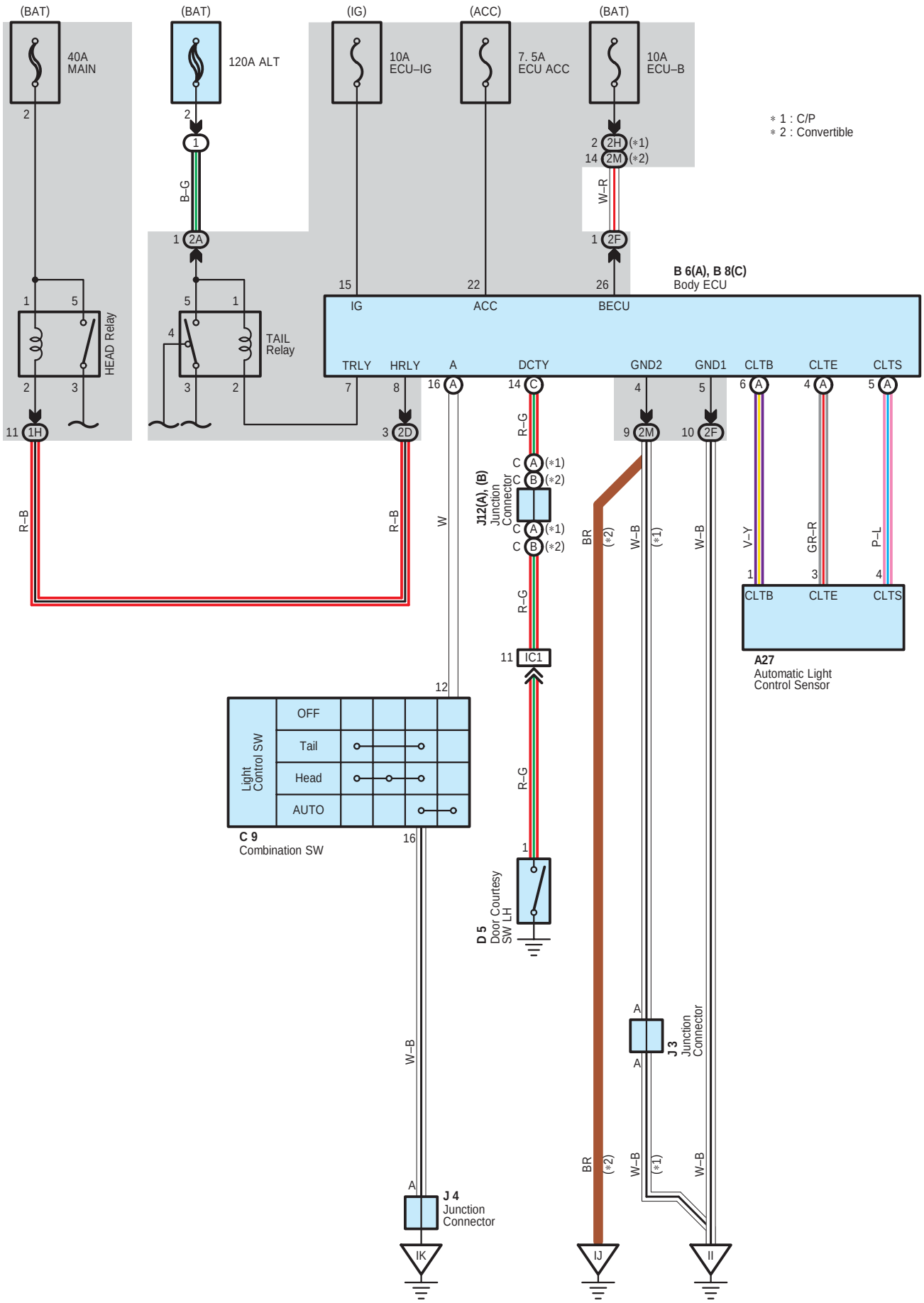
(BAT)
40A
MAIN
(BAT)
120A ALT
(IG)
10A
ECU–IG
(ACC)
7. 5A
ECU ACC
(BAT)
10A
ECU–B
∗1 : C/P
∗2 : Convertible
B–G
W–R
HEAD Relay
TAIL
Relay
B 6(A), B 8(C)
Body ECU
IG
ACC
BECU
TRLY
HRLY
A
DCTY
GND2
GND1
CLTB
CLTE
CLTS
R–B
W
R–G
J12(A), (B)
Junction
Connector
BR
W–B
V–Y
GR–R
P–L
A27
Automatic Light
Control Sensor
IC1
Light
Control SW
OFF
Tail
Head
AUTO
C 9
Combination SW
D 5
Door Courtesy
SW LH
J 3
Junction
Connector
J 4
Junction
Connector
IK
IJ
II

System Outline

The automatic light control system works when the light control SW is turned to AUTO. The automatic light control sensor detects the brightness around the vehicle. By this function, the system automatically turns the taillight and headlight on if the brightness is below the regular level and turns the taillight and headlight off when the surroundings become brighter than the regular level.

: Parts Location

Code		See Page	Code		See Page	Code		See Page
A27		44 (C/P)	B8	C	46 (*1)	J3		45 (C/P)
		46 (*1)	C9		44 (C/P)	J4		45 (C/P)
B6	A	44 (C/P)			46 (*1)			47 (*1)
		46 (*1)	D5		48 (C/P)	J12	A	45 (C/P)
B8	C	44 (C/P)			50 (*1)		B	47 (*1)

: Relay Blocks

Code	See Page	Relay Blocks (Relay Block Location)
1	24	Engine Room R/B (Engine Compartment Left)

: Junction Block and Wire Harness Connector

Code	See Page	Junction Block and Wire Harness (Connector Location)
1H	27	Engine Room Main Wire and Engine Room J/B (Engine Compartment Left)
2A	30	Engine Room Main Wire and Driver Side J/B (Lower Finish Panel)
2D		
2F	30	Instrument Panel Wire and Driver Side J/B (Lower Finish Panel)
2H	31	
2M	30	

: Connector Joining Wire Harness and Wire Harness

Code	See Page	Joining Wire Harness and Wire Harness (Connector Location)
IC1	56 (C/P)	Instrument Panel Wire and Floor No.1 Wire (Left Kick Panel)
	58 (*1)	

: Ground Points

Code	See Page	Ground Points Location
II	56 (C/P)	Cowl Side Panel LH
	58 (*1)	
IJ	58 (*1)	Instrument Panel Brace LH
IK	56 (C/P)	
	58 (*1)	

* 1 : Convertible * 2 : C/P, Convertible w/ VSC * 3 : Convertible w/o VSC

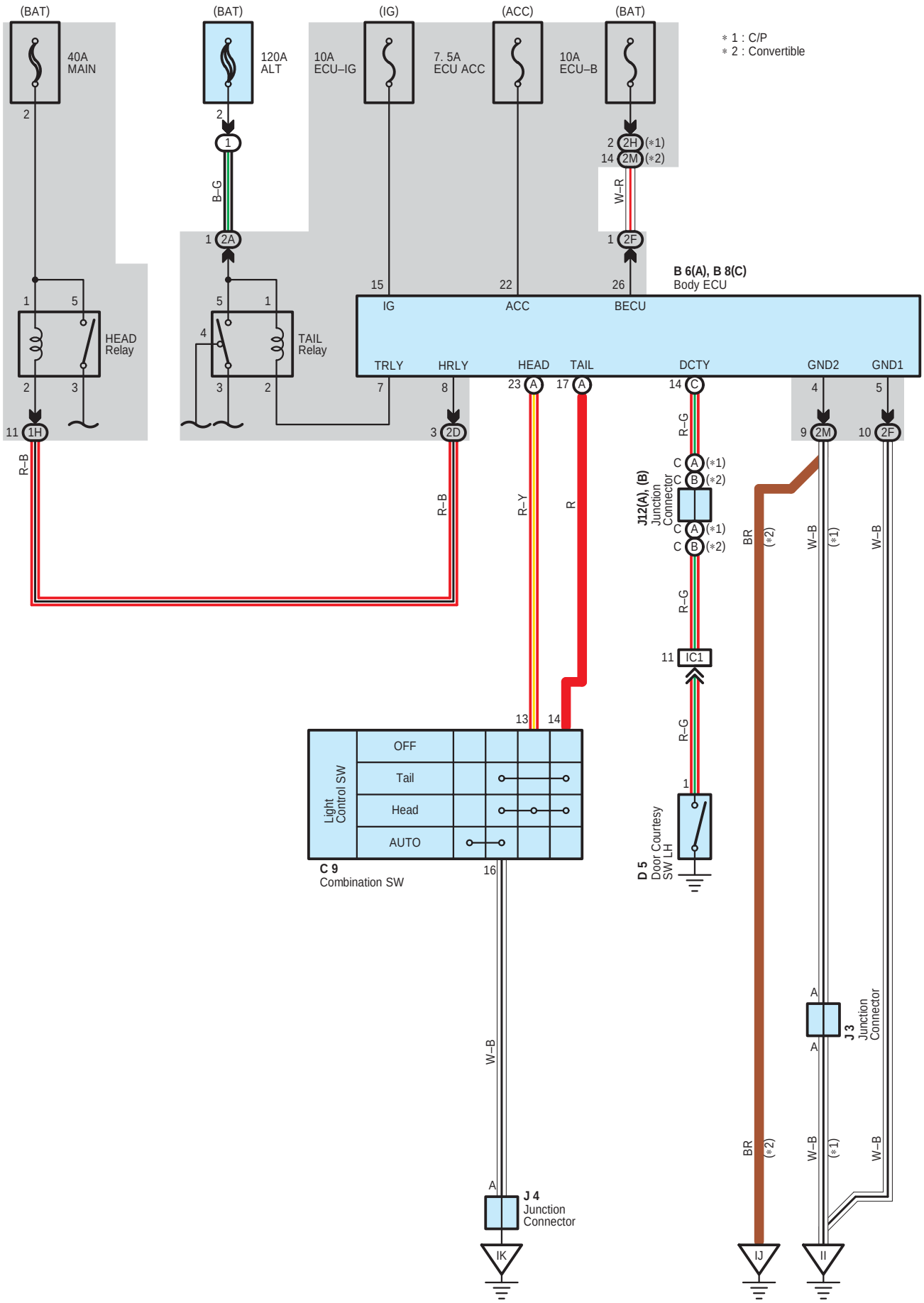
(BAT)
40A
MAIN
(BAT)
120A
ALT
(IG)
10A
ECU–IG
(ACC)
7. 5A
ECU ACC
(BAT)
10A
ECU–B
* 1 : C/P
* 2 : Convertible
B–G
W–R
HEAD
Relay
TAIL
Relay
B 6(A), B 8(C)
Body ECU
IG
ACC
BECU
TRLY
HRLY
HEAD
TAIL
DCTY
GND2
GND1
R–B
R–Y
R
R–G
J12(A), (B)
Junction
Connector
IC1
D 5
Door Courtesy
SW LH
Light
Control SW
OFF
Tail
Head
AUTO
C 9
Combination SW
W–B
J 4
Junction
Connector
J 3
Junction
Connector
BR
IK
IJ
II

System Outline

1. Normal Lighting Operation

<Turn taillight on>

With the light control SW turned to TAIL position, a signal is input into TERMINAL (A) 17 of the body ECU. Due to this signal, the current flowing to TERMINAL 7 of the ECU flows to TERMINAL (A) 17 to TERMINAL 14 of the light control SW to TERMINAL 16 to GROUND, and TAIL relay causes taillights to turn on.

<Turn headlight on>

With the light control SW turned to HEAD position, a signal is input into TERMINALS (A) 17 and (A) 23 of the body ECU. Due to this signal, the current flowing to TERMINAL 8 of the ECU flows to TERMINAL (A) 23 to TERMINAL 13 of the light control SW to TERMINAL 16 to GROUND in the headlight circuit, and causes taillight and HEAD relay to turn the lights on. The taillight circuit is same as above.

2. Light Auto Turn Off Operation

With light on and ignition SW turned off (Input signal goes to TERMINAL 15 of the ECU), when the driver's door is opened (Input signal goes to TERMINAL (C) 14 of the ECU), the body ECU operates and the current is cut off which flows from TERMINAL 7 of the ECU to TERMINAL (A) 17 In taillight circuit and from TERMINAL 8 to TERMINAL (A) 23 in headlight circuit.

As a result, all lights are turned off automatically.

: Parts Location

Code		See Page	Code	See Page	Code		See Page
B6	A	44 (C/P)	C9	46 (*1)	J4		47 (*1)
		46 (*1)	D5	48 (C/P)	J12	A	45 (C/P)
B8	C	44 (C/P)		50 (*1)		B	47 (*1)
		46 (*1)	J3	45 (C/P)			
C9		44 (C/P)	J4	45 (C/P)			

: Relay Blocks

Code	See Page	Relay Blocks (Relay Block Location)
1	24	Engine Room R/B (Engine Compartment Left)

: Junction Block and Wire Harness Connector

Code	See Page	Junction Block and Wire Harness (Connector Location)
1H	27	Engine Room Main Wire and Engine Room J/B (Engine Compartment Left)
2A	30	Engine Room Main Wire and Driver Side J/B (Lower Finish Panel)
2D		
2F	30	Instrument Panel Wire and Driver Side J/B (Lower Finish Panel)
2H	31	
2M	30	

: Connector Joining Wire Harness and Wire Harness

Code	See Page	Joining Wire Harness and Wire Harness (Connector Location)
IC1	56 (C/P)	Instrument Panel Wire and Floor No.1 Wire (Left Kick Panel)
	58 (*1)	

: Ground Points

Code	See Page	Ground Points Location
II	56 (C/P)	Cowl Side Panel LH
	58 (*1)	
IJ	58 (*1)	Instrument Panel Brace LH
IK	56 (C/P)	
	58 (*1)	

* 1 : Convertible * 2 : C/P, Convertible w/ VSC * 3 : Convertible w/o VSC

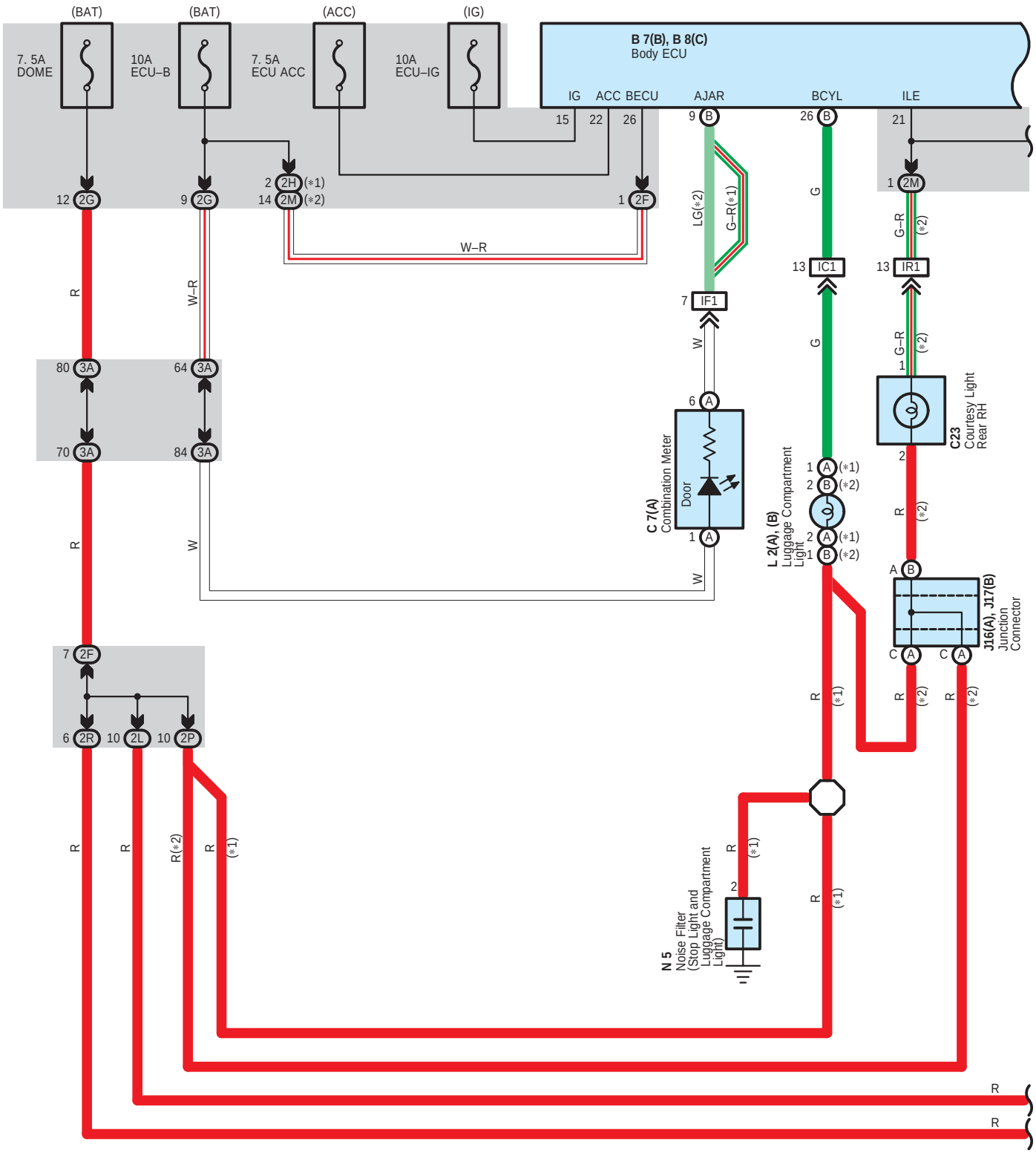
(BAT)
(BAT)
(ACC)
(IG)
7. 5A
DOME
10A
ECU–B
7. 5A
ECU ACC
10A
ECU–IG
B 7(B), B 8(C)
Body ECU
IG
ACC
BECU
AJAR
BCYL
ILE
15
22
26
9 B
26 B
21
12 2G
9 2G
2 2H (*1)
14 2M (*2)
1 2F
1 2M
W–R
LG(*2)
G–R(*1)
G
G–R
(*2)
13 IC1
13 IR1
7 IF1
W
R
W–R
80 3A
64 3A
70 3A
84 3A
6 A
1 A
C 7(A)
Combination Meter
Door
1 A (*1)
2 B (*2)
2 A (*1)
1 B (*2)
L 2(A), (B)
Luggage Compartment
Light
C23
Courtesy Light
Rear RH
A B
C A
C A
J16(A), J17(B)
Junction
Connector
7 2F
6 2R
10 2L
10 2P
R(*2)
(*1)
N 5
Noise Filter
(Stop Light and
Luggage Compartment
Light)

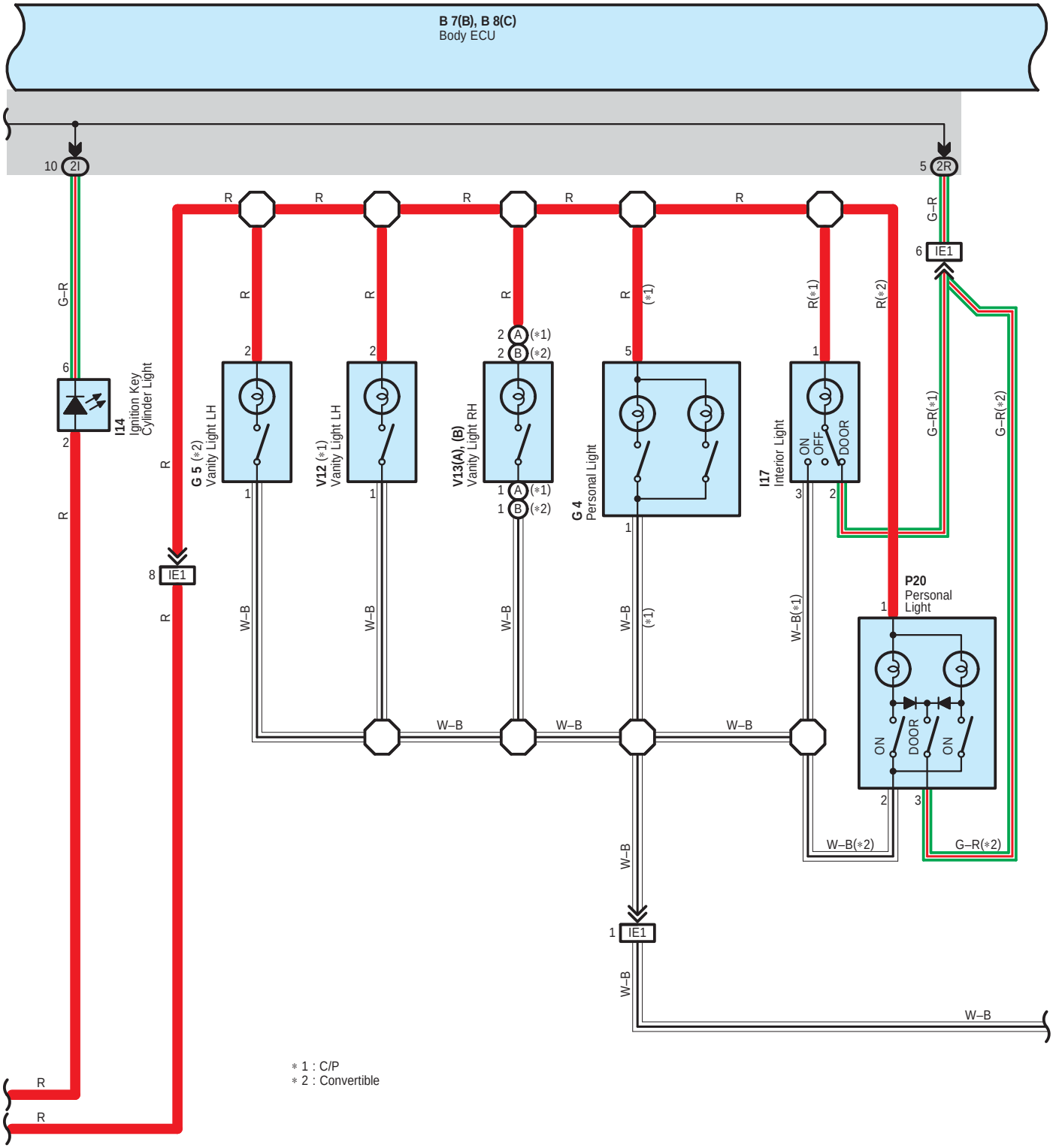
B 7(B), B 8(C)
Body ECU
10 2I
5 2R
G–R
6
2
I14
Ignition Key
Cylinder Light
R
8 IE1
G 5 (*2)
Vanity Light LH
V12 (*1)
Vanity Light LH
V13(A), (B)
Vanity Light RH
G 4
Personal Light
I17
Interior Light
ON
OFF
DOOR
P20
Personal
Light
W–B
W–B(*1)
W–B(*2)
G–R(*1)
G–R(*2)
6 IE1
1 IE1
* 1 : C/P
* 2 : Convertible

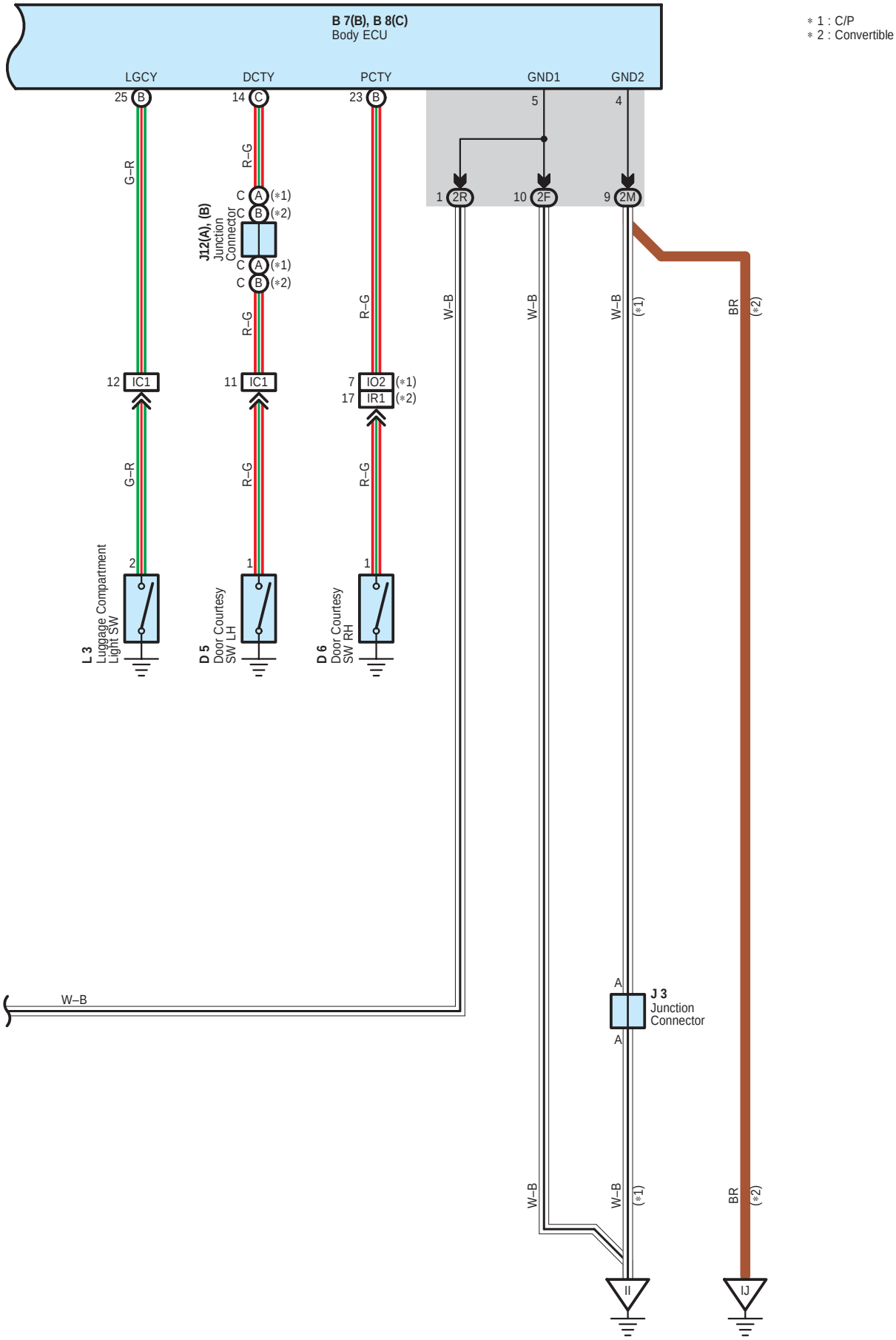

∗ 1 : C/P
∗ 2 : Convertible

: Parts Location

Code		See Page	Code		See Page	Code		See Page
B7	B	44 (C/P)	D6		50 (*1)	J17	B	50 (*1)
		46 (*1)	G4		48 (C/P)	L2	A	48 (C/P)
B8	C	44 (C/P)	G5		50 (*1)		B	50 (*1)
		46 (*1)	I14		45 (C/P)	L3		48 (C/P)
C7	A	44 (C/P)			47 (*1)			50 (*1)
		46 (*1)	I17		48 (C/P)	N5		49 (C/P)
C23		50 (*1)	J3		45 (C/P)	P20		51 (*1)
D5		48 (C/P)	J12	A	45 (C/P)	V12		49 (C/P)
		50 (*1)		B	47 (*1)	V13	A	49 (C/P)
D6		48 (C/P)	J16	A	50 (*1)		B	51 (*1)

: Junction Block and Wire Harness Connector

Code	See Page	Junction Block and Wire Harness (Connector Location)
2F	30	Instrument Panel Wire and Driver Side J/B (Lower Finish Panel)
2G	31	
2H		
2I		
2L	30	
2M		
2P	30	Floor Wire and Driver Side J/B (Lower Finish Panel)
2R	30	Instrument Panel Wire and Driver Side J/B (Lower Finish Panel)
3A	36 (*2)	Instrument Panel Wire and Passenger Side J/B (Instrument Panel Brace RH)
	37 (*3)	

: Connector Joining Wire Harness and Wire Harness

Code	See Page	Joining Wire Harness and Wire Harness (Connector Location)
IC1	56 (C/P)	Instrument Panel Wire and Floor No.1 Wire (Left Kick Panel)
	58 (*1)	
IE1	56 (C/P)	Instrument Panel Wire and Roof Wire (Inside of Front Left Pillar)
	58 (*1)	
IF1	56 (C/P)	Instrument Panel Wire and Instrument Panel Wire (Instrument Panel Brace LH)
	58 (*1)	
IO2	57 (C/P)	Instrument Panel Wire and Floor No.2 Wire (Right Kick Panel)
IR1	59 (*1)	

: Ground Points

Code	See Page	Ground Points Location
II	56 (C/P)	Cowl Side Panel LH
	58 (*1)	
IJ	58 (*1)	Instrument Panel Brace LH

* 1 : Convertible * 2 : C/P, Convertible w/ VSC * 3 : Convertible w/o VSC

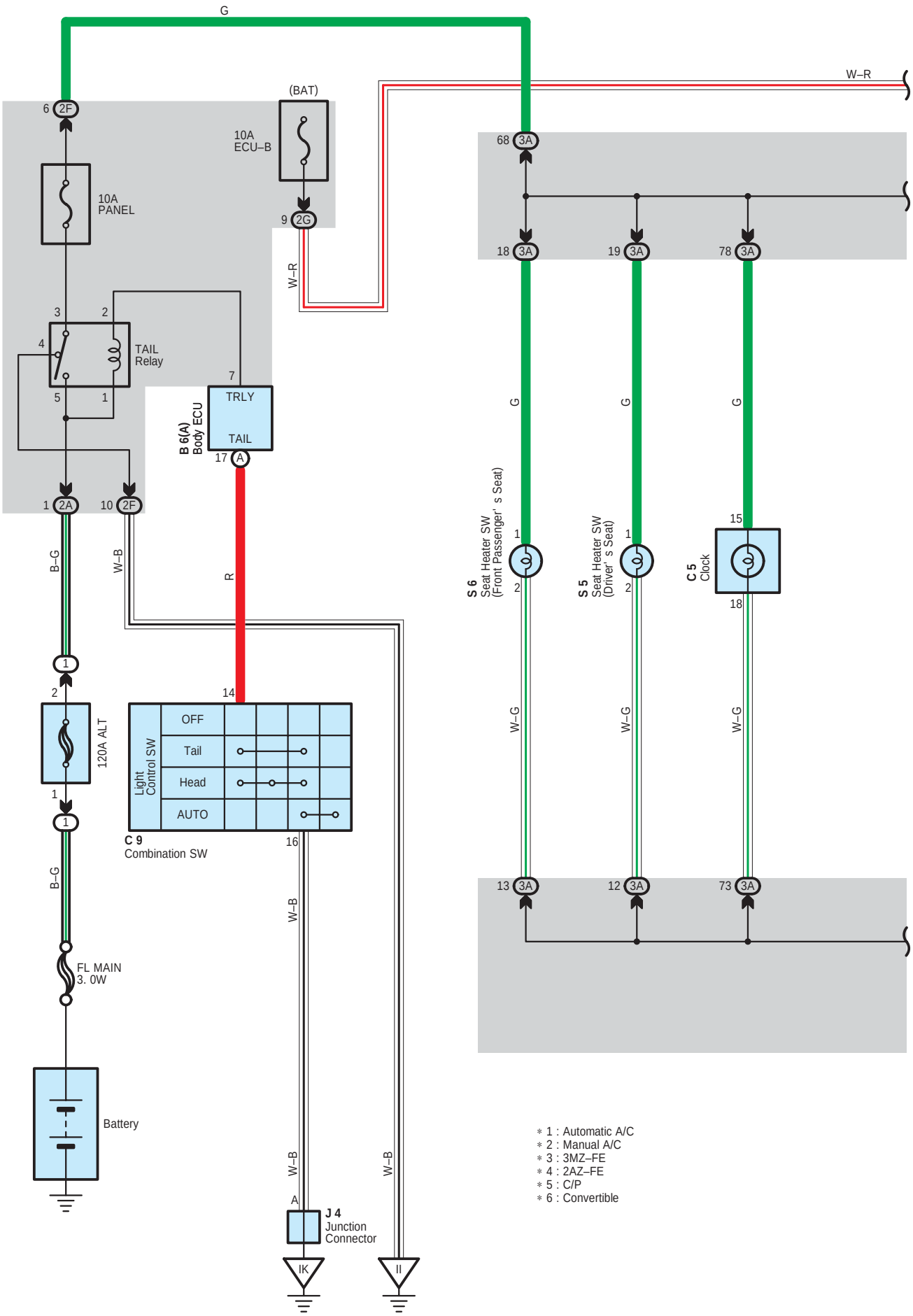
G
W–R
(BAT)
10A
ECU–B
6 2F
10A
PANEL
9 2G
W–R
68 3A
18 3A
19 3A
78 3A
3
2
4
TAIL
Relay
5
1
7
TRLY
TAIL
B 6(A)
Body ECU
17 A
G
G
G
1 2A
10 2F
B–G
W–B
R
S 6
Seat Heater SW
(Front Passenger' s Seat)
S 5
Seat Heater SW
(Driver' s Seat)
C 5
Clock
15
18
14
120A ALT
OFF
Tail
Head
AUTO
Light
Control SW
C 9
Combination SW
16
W–G
W–G
W–G
13 3A
12 3A
73 3A
B–G
W–B
FL MAIN
3. 0W
Battery
W–B
W–B
A
J 4
Junction
Connector
IK
II
∗ 1 : Automatic A/C
∗ 2 : Manual A/C
∗ 3 : 3MZ–FE
∗ 4 : 2AZ–FE
∗ 5 : C/P
∗ 6 : Convertible

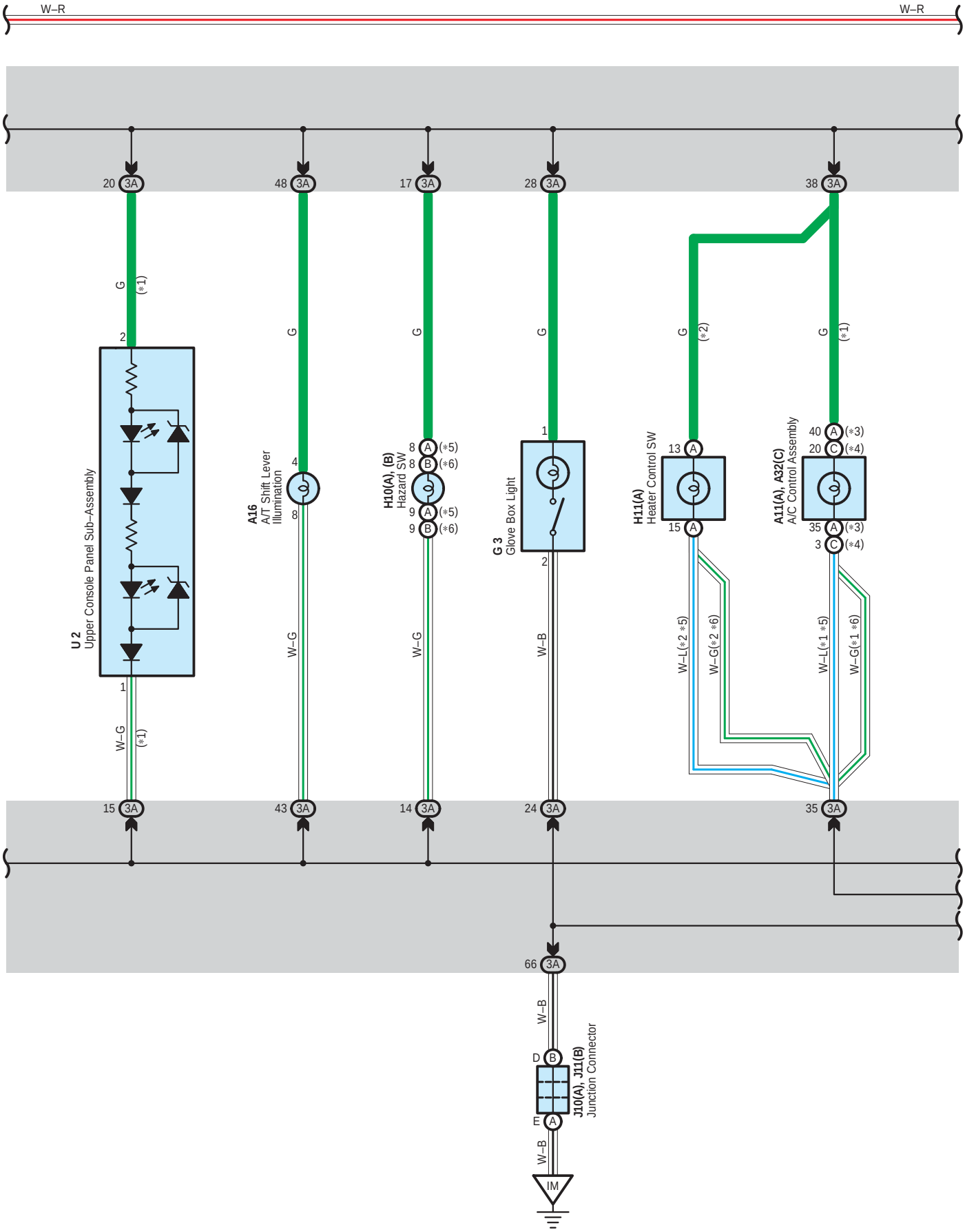
W–R
W–R
20 3A
48 3A
17 3A
28 3A
38 3A
G
(*1)
G
G
G
(*2)
G
(*1)
2
U 2
Upper Console Panel Sub–Assembly
1
W–G
(*1)
4
A16
A/T Shift Lever
Illumination
8
W–G
8 A (*5)
8 B (*6)
H10(A), (B)
Hazard SW
9 A (*5)
9 B (*6)
W–G
1
G 3
Glove Box Light
2
W–B
13 A
H11(A)
Heater Control SW
15 A
W–L(*2 *5)
W–G(*2 *6)
40 A (*3)
20 C (*4)
A11(A), A32(C)
A/C Control Assembly
35 A (*3)
3 C (*4)
W–L(*1 *5)
W–G(*1 *6)
15 3A
43 3A
14 3A
24 3A
35 3A
66 3A
W–B
D B
J10(A), J11(B)
Junction Connector
E A
W–B
IM

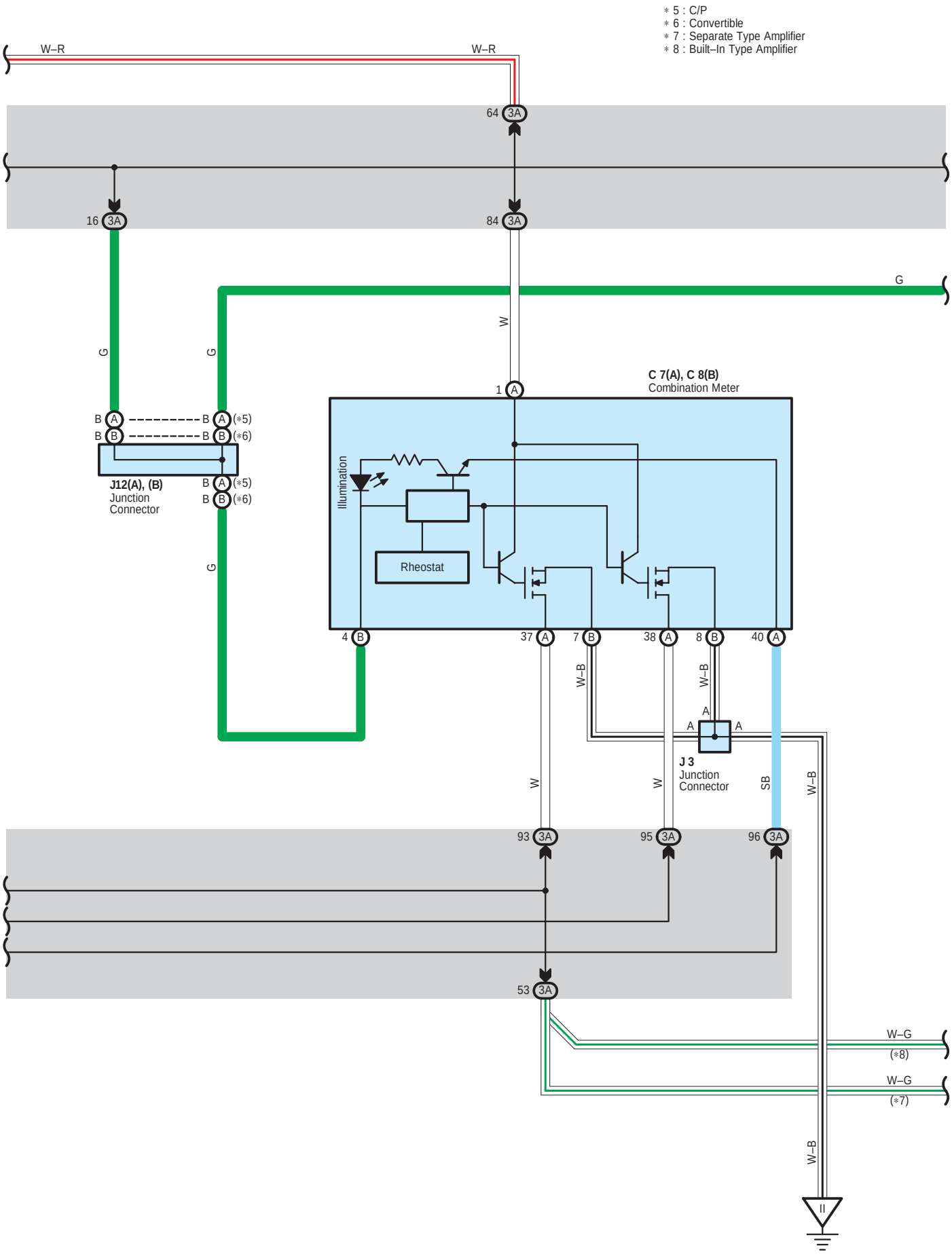
∗5 : C/P
∗6 : Convertible
∗7 : Separate Type Amplifier
∗8 : Built–In Type Amplifier
W–R
W–R
64 3A
16 3A
84 3A
G
G
G
W
G
1 A
C 7(A), C 8(B)
Combination Meter
B A
B B
B A (∗5)
B B (∗6)
J12(A), (B)
Junction
Connector
B A (∗5)
B B (∗6)
Illumination
Rheostat
4 B
37 A
7 B
38 A
8 B
40 A
W–B
W–B
A
A
A
J 3
Junction
Connector
W
W
SB
W–B
93 3A
95 3A
96 3A
53 3A
W–G
(∗8)
W–G
(∗7)
W–B

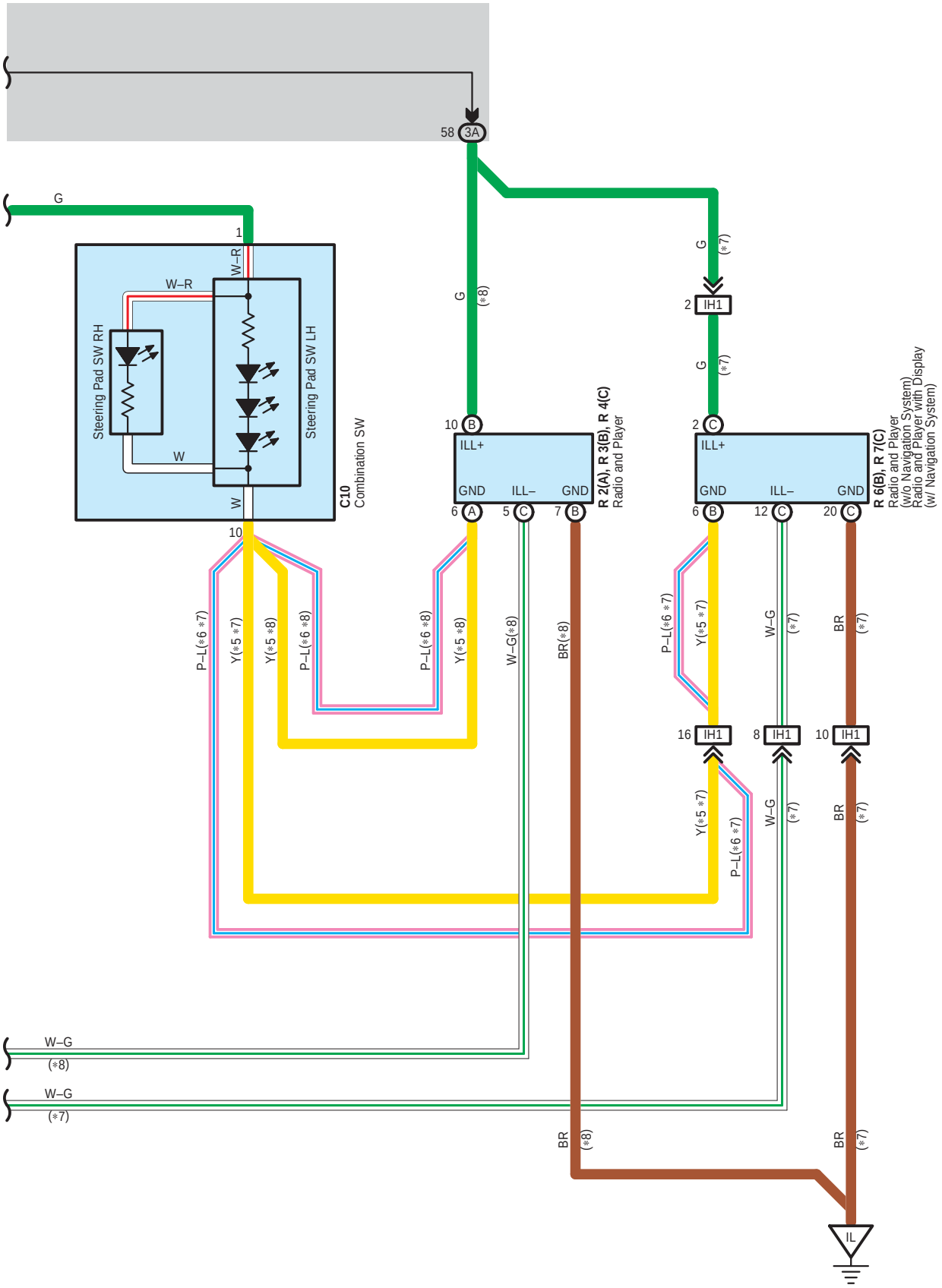
58 3A
G
1
W–R
W–R
Steering Pad SW RH
Steering Pad SW LH
W
W
10
C10
Combination SW
G
(*8)
10 B
ILL+
GND
ILL–
GND
6 A
5 C
7 B
R 2(A), R 3(B), R 4(C)
Radio and Player
G
(*7)
2 IH1
G
(*7)
2 C
ILL+
GND
ILL–
GND
6 B
12 C
20 C
R 6(B), R 7(C)
Radio and Player
(w/o Navigation System)
Radio and Player with Display
(w/ Navigation System)
P–L(*6 *7)
Y(*5 *7)
Y(*5 *8)
P–L(*6 *8)
P–L(*6 *8)
Y(*5 *8)
W–G(*8)
BR(*8)
P–L(*6 *7)
Y(*5 *7)
W–G
(*7)
BR
(*7)
16 IH1
8 IH1
10 IH1
Y(*5 *7)
P–L(*6 *7)
W–G
(*7)
BR
(*7)
W–G
(*8)
W–G
(*7)
BR
(*8)
BR
(*7)
IL

○ : **Parts Location**

Code		See Page	Code		See Page	Code		See Page
A11	A	44 (C/P)	G3		44 (C/P)	R2	A	47 (*1)
		46 (*1)			46 (*1)	R3	B	45 (C/P)
A16		44 (C/P)	H10	A	44 (C/P)			47 (*1)
		46 (*1)		B	46 (*1)	R4	C	45 (C/P)
A32	C	44 (C/P)	H11	A	44 (C/P)			47 (*1)
B6	A	44 (C/P)			46 (*1)	R6	B	45 (C/P)
		46 (*1)	J3		45 (C/P)			47 (*1)
C5		44 (C/P)			47 (*1)	R7	C	45 (C/P)
		46 (*1)	J4		45 (C/P)			47 (*1)
C7	A	44 (C/P)			47 (*1)	S5		45 (C/P)
		46 (*1)	J10	A	45 (C/P)			47 (*1)
C8	B	44 (C/P)			47 (*1)	S6		45 (C/P)
		46 (*1)	J11	B	45 (C/P)			47 (*1)
C9		44 (C/P)			47 (*1)	U2		45 (C/P)
		46 (*1)	J12	A	45 (C/P)			47 (*1)
C10		44 (C/P)		B	47 (*1)			
		46 (*1)	R2	A	45 (C/P)			

: Relay Blocks

Code	See Page	Relay Blocks (Relay Block Location)
1	24	Engine Room R/B (Engine Compartment Left)

: Junction Block and Wire Harness Connector

Code	See Page	Junction Block and Wire Harness (Connector Location)
2A	30	Engine Room Main Wire and Driver Side J/B (Lower Finish Panel)
2F	30	Instrument Panel Wire and Driver Side J/B (Lower Finish Panel)
2G	31	
3A	36 (*2)	Instrument Panel Wire and Passenger Side J/B (Instrument Panel Brace RH)
	37 (*3)	

: Connector Joining Wire Harness and Wire Harness

Code	See Page	Joining Wire Harness and Wire Harness (Connector Location)
IH1	57 (C/P)	Instrument Panel No.2 Wire and Instrument Panel Wire (Behind the Radio and Player)
	59 (*1)	

: Ground Points

Code	See Page	Ground Points Location
II	56 (C/P)	Cowl Side Panel LH
	58 (*1)	
IK	56 (C/P)	Instrument Panel Brace LH
	58 (*1)	
IL	56 (C/P)	Instrument Panel Brace RH
	58 (*1)	
IM	56 (C/P)	Instrument Panel Reinforcement RH
	58 (*1)	

* 1 : Convertible * 2 : C/P, Convertible w/ VSC * 3 : Convertible w/o VSC

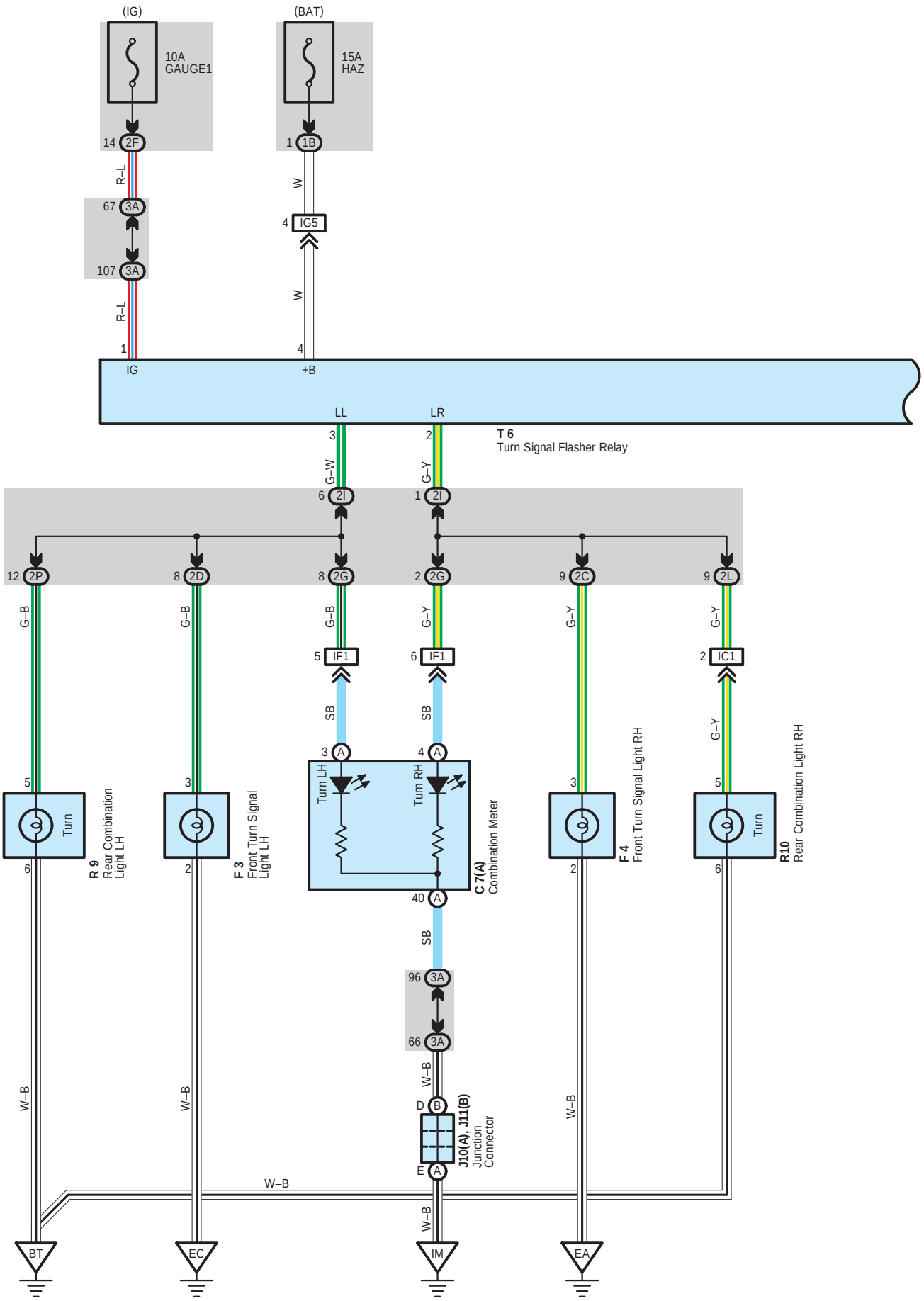
(IG)
10A
GAUGE1
(BAT)
15A
HAZ
14 2F
1 1B
R–L
W
67 3A
4 IG5
107 3A
W
R–L
1
4
IG
+B
LL
LR
3
2
T 6
Turn Signal Flasher Relay
G–W
G–Y
6 2I
1 2I
12 2P
8 2D
8 2G
2 2G
9 2C
9 2L
G–B
G–B
G–B
G–Y
G–Y
G–Y
5 IF1
6 IF1
2 IC1
SB
SB
G–Y
3 A
4 A
Turn LH
Turn RH
5
3
3
5
Turn
Turn
R 9
Rear Combination
Light LH
F 3
Front Turn Signal
Light LH
C 7(A)
Combination Meter
F 4
Front Turn Signal Light RH
R10
Rear Combination Light RH
6
2
2
6
40 A
SB
96 3A
66 3A
W–B
D B
J10(A), J11(B)
Junction
Connector
E A
W–B
W–B
W–B
W–B
BT
EC
IM
EA

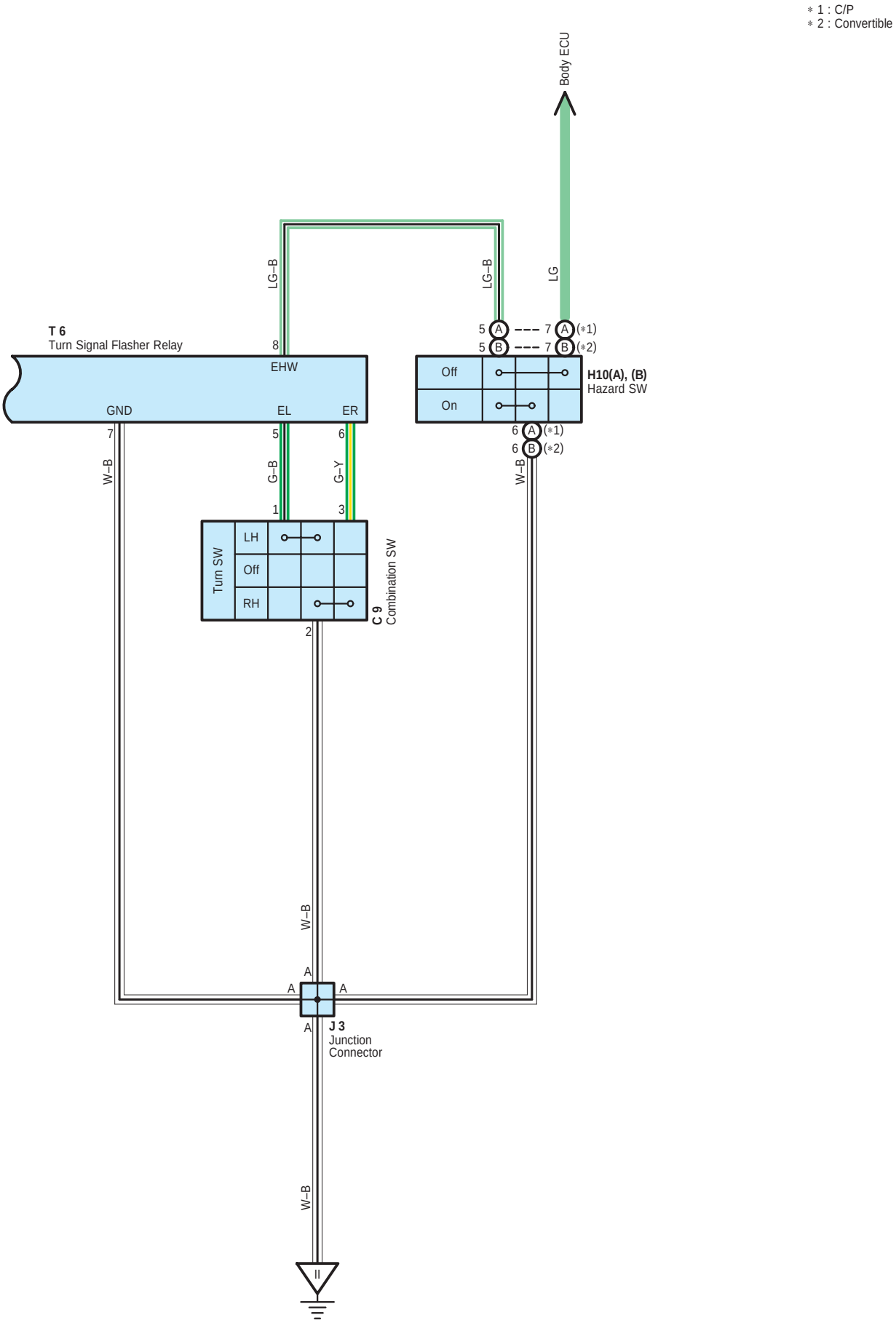
* 1 : C/P
* 2 : Convertible
Body ECU
LG
LG–B
LG–B
T 6
Turn Signal Flasher Relay
8
EHW
GND
EL
ER
7
5
6
W–B
G–B
G–Y
1
3
5 A
5 B
7 A (*1)
7 B (*2)
Off
On
H10(A), (B)
Hazard SW
6 A (*1)
6 B (*2)
W–B
Turn SW
LH
Off
RH
C 9
Combination SW
2
W–B
A
A
A
A
J 3
Junction
Connector
W–B

Turn Signal and Hazard Warning Light

○ : **Parts Location**

Code		See Page	Code		See Page	Code	See Page
C7	A	44 (C/P)	H10	A	44 (C/P)	R9	49 (C/P)
		46 (*1)		B	46 (*1)		51 (*1)
C9		44 (C/P)	J3		45 (C/P)	R10	49 (C/P)
		46 (*1)			47 (*1)		51 (*1)
F3		40 (3MZ–FE)	J10	A	45 (C/P)	T6	45 (C/P)
		42 (2AZ–FE)			47 (*1)		47 (*1)
F4		40 (3MZ–FE)	J11	B	45 (C/P)		
		42 (2AZ–FE)			47 (*1)		

: **Junction Block and Wire Harness Connector**

Code	See Page	Junction Block and Wire Harness (Connector Location)
1B	27	Engine Room Main Wire and Engine Room J/B (Engine Compartment Left)
2C	30	Engine Room Main Wire and Driver Side J/B (Lower Finish Panel)
2D		
2F	30	Instrument Panel Wire and Driver Side J/B (Lower Finish Panel)
2G	31	
2I		
2L	30	
2P	30	Floor Wire and Driver Side J/B (Lower Finish Panel)
3A	36 (*2)	Instrument Panel Wire and Passenger Side J/B (Instrument Panel Brace RH)
	37 (*3)	

: **Connector Joining Wire Harness and Wire Harness**

Code	See Page	Joining Wire Harness and Wire Harness (Connector Location)
IC1	56 (C/P)	Instrument Panel Wire and Floor No.1 Wire (Left Kick Panel)
	58 (*1)	
IF1	56 (C/P)	Instrument Panel Wire and Instrument Panel Wire (Instrument Panel Brace LH)
	58 (*1)	
IG5	56 (C/P)	Engine Room Main Wire and Instrument Panel Wire (Behind the Radio and Player)
	58 (*1)	

: **Ground Points**

Code	See Page	Ground Points Location
EA	54 (3MZ–FE)	Right Fender
	55 (2AZ–FE)	
EC	54 (3MZ–FE)	Left Fender
	55 (2AZ–FE)	
II	56 (C/P)	Cowl Side Panel LH
	58 (*1)	
IM	56 (C/P)	Instrument Panel Reinforcement RH
	58 (*1)	
BT	60 (C/P)	Back Panel Center
	61 (*1)	

* 1 : Convertible * 2 : C/P, Convertible w/ VSC * 3 : Convertible w/o VSC

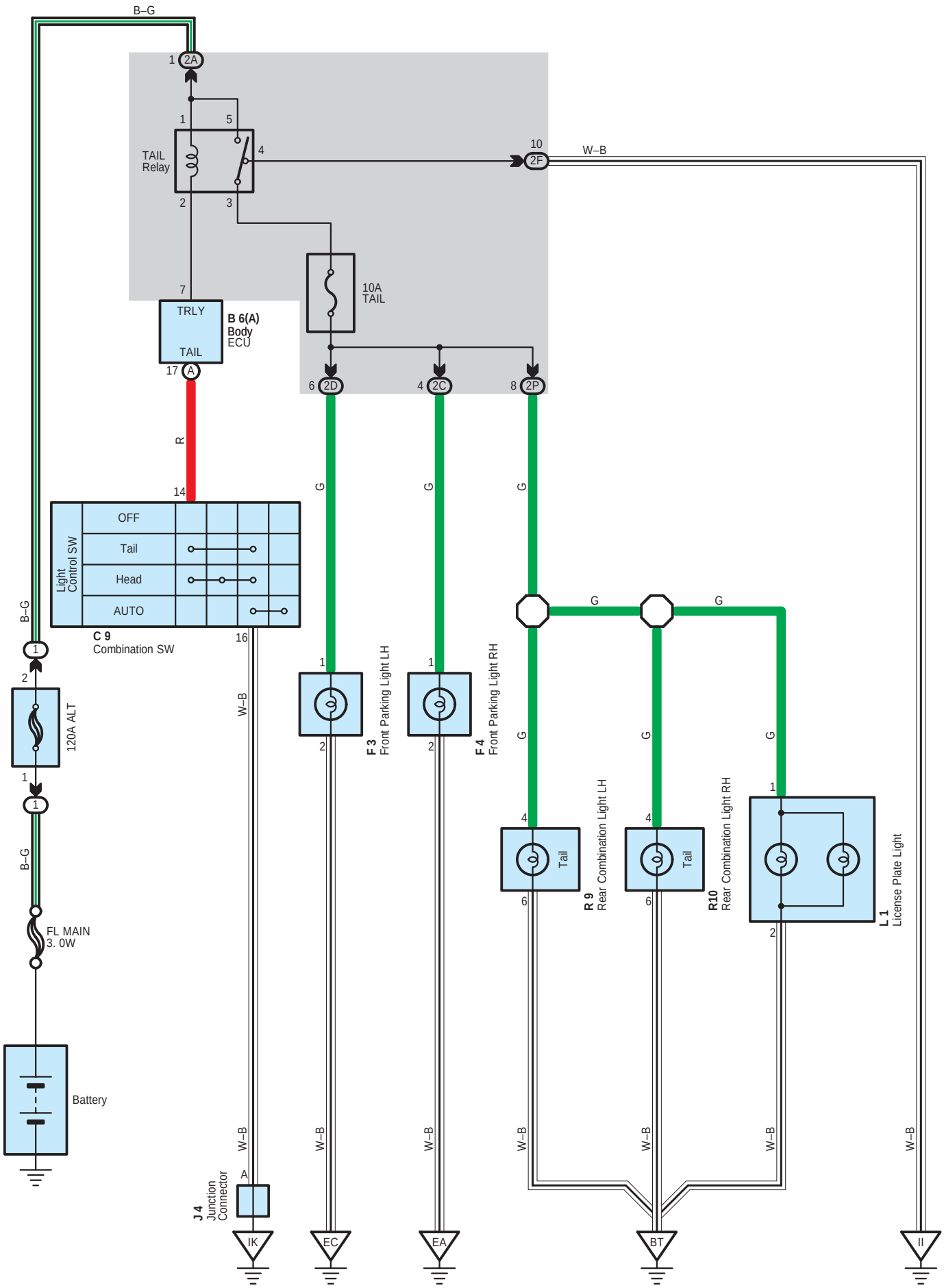
B–G
1 2A
1
5
TAIL
Relay
4
2
3
10
2F
W–B
10A
TAIL
7
TRLY
TAIL
B 6(A)
Body
ECU
17 A
R
14
6 2D
4 2C
8 2P
G
G
G
Light
Control SW
OFF
Tail
Head
AUTO
C 9
Combination SW
16
W–B
B–G
1
2
120A ALT
1
1
B–G
FL MAIN
3. 0W
Battery
1
2
F 3
Front Parking Light LH
1
2
F 4
Front Parking Light RH
G
G
G
G
G
G
4
6
Tail
R 9
Rear Combination Light LH
4
6
Tail
R10
Rear Combination Light RH
1
2
L 1
License Plate Light
W–B
W–B
W–B
W–B
W–B
W–B
W–B
A
J 4
Junction
Connector
IK
EC
EA
BT
II

: Parts Location

Code		See Page	Code	See Page	Code	See Page
B6	A	44 (C/P)	F4	40 (3MZ–FE)	R9	49 (C/P)
		46 (*1)		42 (2AZ–FE)		51 (*1)
C9		44 (C/P)	J4	45 (C/P)	R10	49 (C/P)
		46 (*1)		47 (*1)		51 (*1)
F3		40 (3MZ–FE)	L1	48 (C/P)		
		42 (2AZ–FE)		50 (*1)		

: Relay Blocks

Code	See Page	Relay Blocks (Relay Block Location)
1	24	Engine Room R/B (Engine Compartment Left)

: Junction Block and Wire Harness Connector

Code	See Page	Junction Block and Wire Harness (Connector Location)
2A	30	Engine Room Main Wire and Driver Side J/B (Lower Finish Panel)
2C		
2D		
2F	30	Instrument Panel Wire and Driver Side J/B (Lower Finish Panel)
2P	30	Floor Wire and Driver Side J/B (Lower Finish Panel)

: Ground Points

Code	See Page	Ground Points Location
EA	54 (3MZ–FE)	Right Fender
	55 (2AZ–FE)	
EC	54 (3MZ–FE)	Left Fender
	55 (2AZ–FE)	
II	56 (C/P)	Cowl Side Panel LH
	58 (*1)	
IK	56 (C/P)	Instrument Panel Brace LH
	58 (*1)	
BT	60 (C/P)	Back Panel Center
	61 (*1)	

* 1 : Convertible * 2 : C/P, Convertible w/ VSC * 3 : Convertible w/o VSC

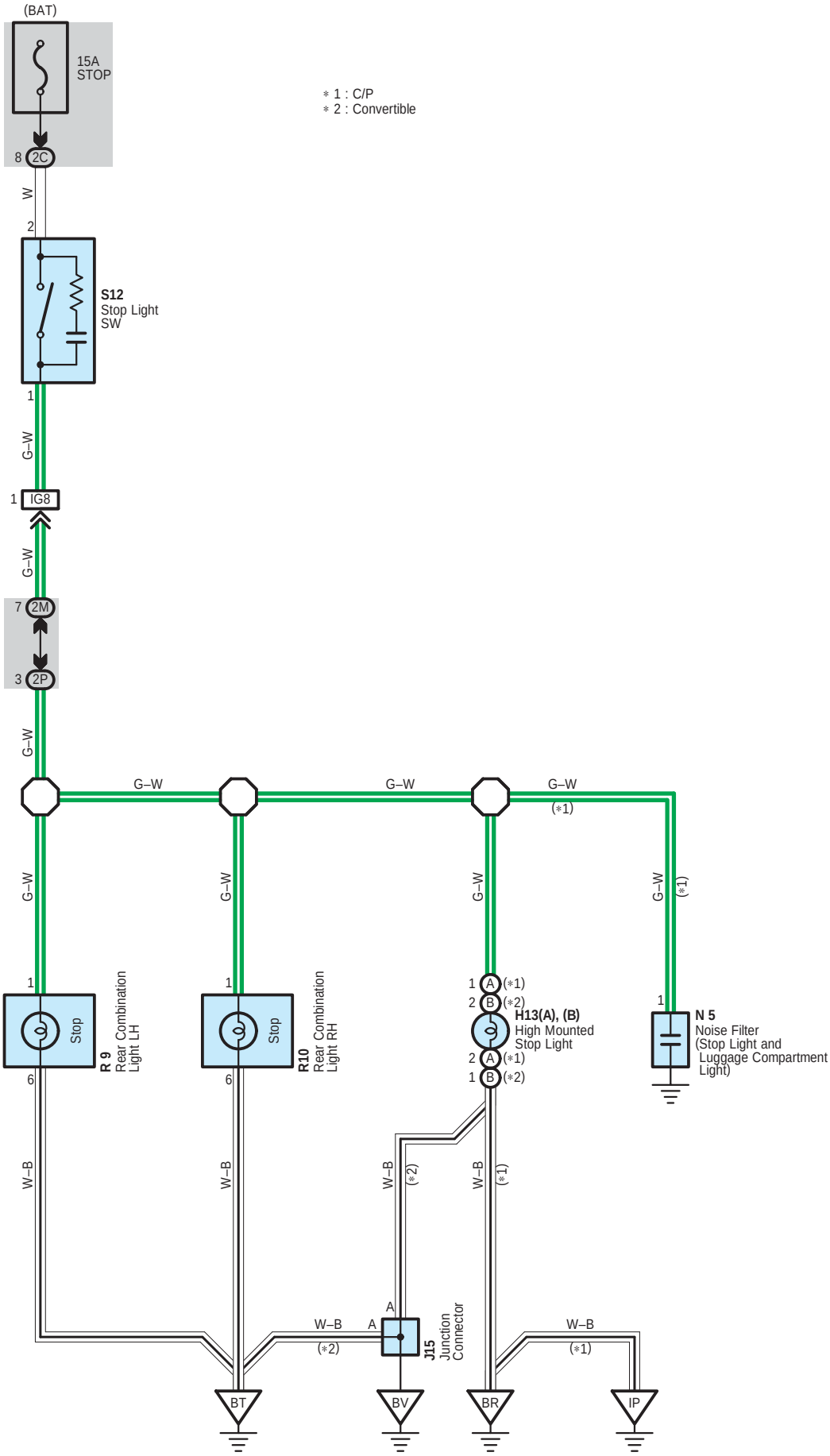
(BAT)
15A
STOP
8 2C
W
2
S12
Stop Light
SW
1
G–W
1 IG8
G–W
7 2M
3 2P
G–W
G–W
G–W
G–W
(*1)
G–W
G–W
G–W
G–W
(*1)
1
Stop
R 9
Rear Combination
Light LH
6
1
Stop
R10
Rear Combination
Light RH
6
1 A (*1)
2 B (*2)
H13(A), (B)
High Mounted
Stop Light
2 A (*1)
1 B (*2)
1
N 5
Noise Filter
(Stop Light and
Luggage Compartment
Light)
W–B
W–B
W–B
(*2)
W–B
(*1)
A
W–B
A
(*2)
J15
Junction
Connector
W–B
(*1)
BT
BV
BR
IP
* 1 : C/P
* 2 : Convertible

: Parts Location

Code		See Page	Code	See Page	Code	See Page
H13	A	48 (C/P)	R9	49 (C/P)	S12	45 (C/P)
	B	50 (*1)		51 (*1)		47 (*1)
J15		50 (*1)	R10	49 (C/P)		
N5		49 (C/P)		51 (*1)		

: Junction Block and Wire Harness Connector

Code	See Page	Junction Block and Wire Harness (Connector Location)
2C	30	Engine Room Main Wire and Driver Side J/B (Lower Finish Panel)
2M	30	Instrument Panel Wire and Driver Side J/B (Lower Finish Panel)
2P	30	Floor Wire and Driver Side J/B (Lower Finish Panel)

: Connector Joining Wire Harness and Wire Harness

Code	See Page	Joining Wire Harness and Wire Harness (Connector Location)
IG8	56 (C/P)	Engine Room Main Wire and Instrument Panel Wire (Behind the Radio and Player)
	58 (*1)	

: Ground Points

Code	See Page	Ground Points Location
IP	56 (C/P)	Left Kick Panel
BR	60 (C/P)	Left Center Pillar
BT	60 (C/P)	Back Panel Center
	61 (*1)	
BV	61 (*1)	Front Side of Rear Quarter Panel LH

* 1 : Convertible * 2 : C/P, Convertible w/ VSC * 3 : Convertible w/o VSC

∗ 1 : w/ Navigation System

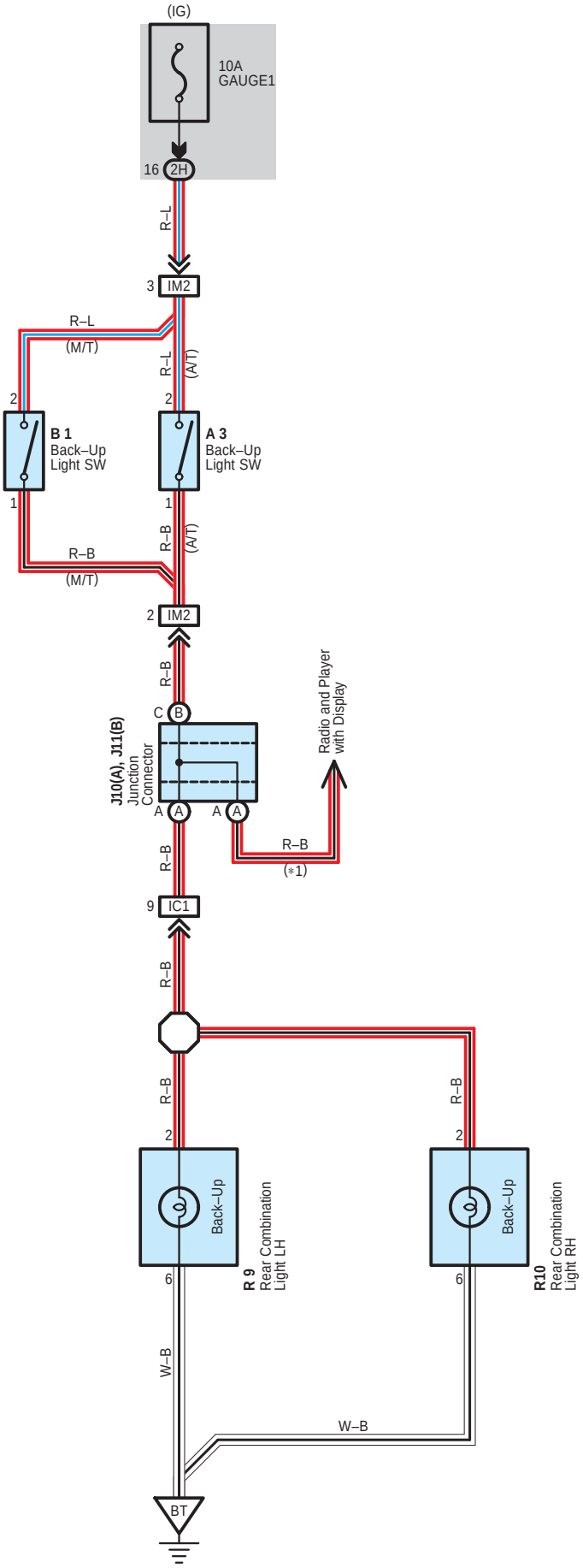

: Parts Location

Code	See Page	Code	See Page	Code	See Page
A3	40 (3MZ–FE)	J10 A	47 (*1)	R9	51 (*1)
	42 (2AZ–FE)	J11 B	45 (C/P)	R10	49 (C/P)
B1	42 (2AZ–FE)		47 (*1)		51 (*1)
J10 A	45 (C/P)	R9	49 (C/P)		

: Junction Block and Wire Harness Connector

Code	See Page	Junction Block and Wire Harness (Connector Location)
2H	31	Instrument Panel Wire and Driver Side J/B (Lower Finish Panel)

: Connector Joining Wire Harness and Wire Harness

Code	See Page	Joining Wire Harness and Wire Harness (Connector Location)
IC1	56 (C/P)	Instrument Panel Wire and Floor No.1 Wire (Left Kick Panel)
	58 (*1)	
IM2	57 (C/P)	Engine Wire and Instrument Panel Wire (Behind the Glove Box)
	59 (*1)	

: Ground Points

Code	See Page	Ground Points Location
BT	60 (C/P)	Back Panel Center
	61 (*1)	

* 1 : Convertible * 2 : C/P, Convertible w/ VSC * 3 : Convertible w/o VSC

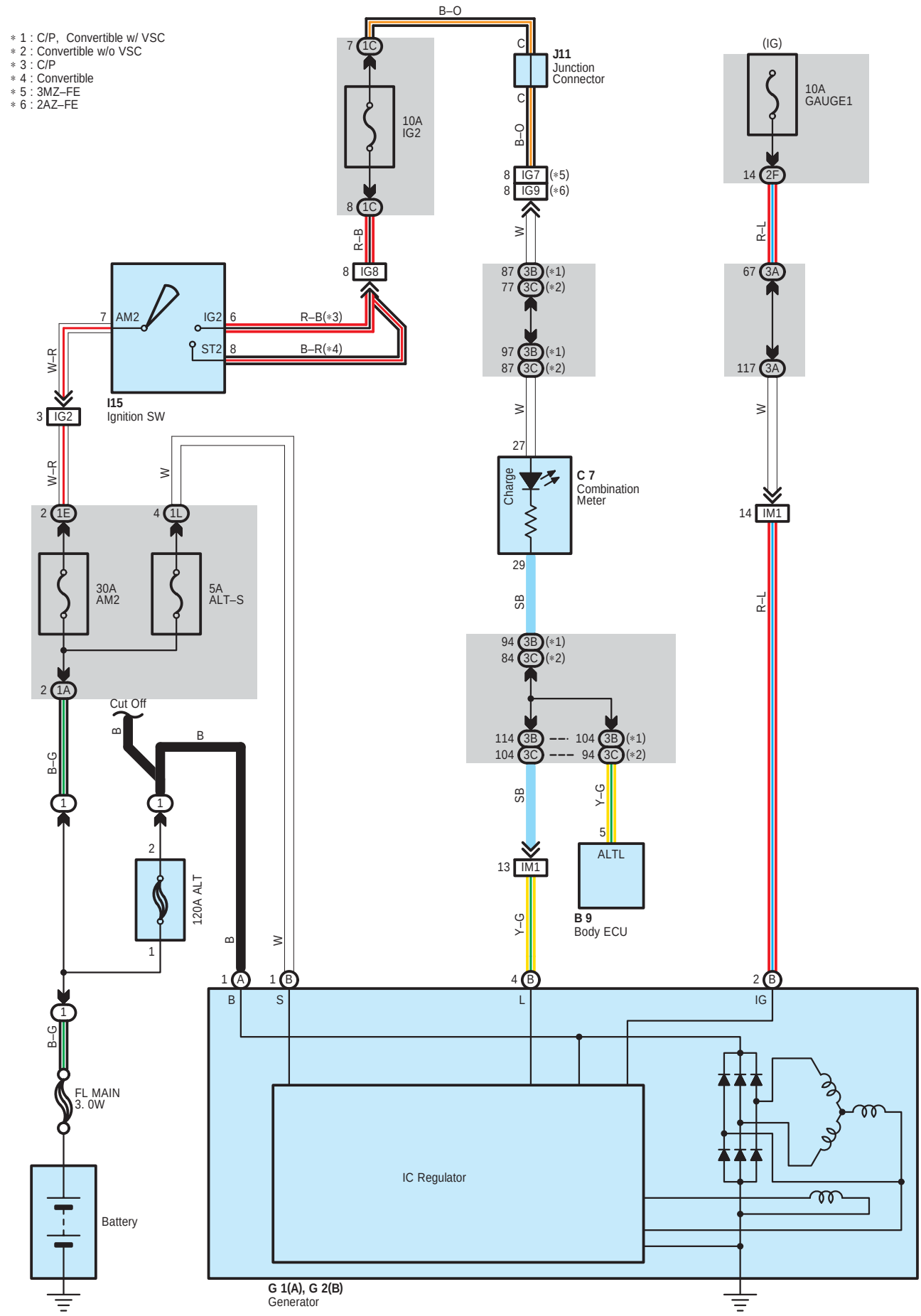
∗1 : C/P, Convertible w/ VSC
∗2 : Convertible w/o VSC
∗3 : C/P
∗4 : Convertible
∗5 : 3MZ–FE
∗6 : 2AZ–FE
B–O
7 1C
10A
IG2
8 1C
R–B
8 IG8
J11
Junction
Connector
C
C
B–O
8 IG7 (∗5)
8 IG9 (∗6)
W
(IG)
10A
GAUGE1
14 2F
R–L
67 3A
117 3A
W
14 IM1
R–L
87 3B (∗1)
77 3C (∗2)
97 3B (∗1)
87 3C (∗2)
W
27
Charge
C 7
Combination
Meter
29
SB
94 3B (∗1)
84 3C (∗2)
114 3B
104 3C
104 3B (∗1)
94 3C (∗2)
SB
Y–G
5
ALTL
B 9
Body ECU
13 IM1
Y–G
7 AM2
IG2 6
ST2 8
R–B(∗3)
B–R(∗4)
I15
Ignition SW
W–R
3 IG2
W–R
W
2 1E
4 1L
30A
AM2
5A
ALT–S
2 1A
Cut Off
B
B
B–G
1
1
2
120A ALT
1
B
W
1 A
1 B
4 B
2 B
B
S
L
IG
B–G
1
FL MAIN
3. 0W
Battery
IC Regulator
G 1(A), G 2(B)
Generator

: Parts Location

Code	See Page	Code		See Page	Code	See Page
B9	44 (C/P)	G1	A	40 (3MZ–FE)	I15	45 (C/P)
	46 (*1)			42 (2AZ–FE)		47 (*1)
C7	44 (C/P)	G2	B	40 (3MZ–FE)	J11	45 (C/P)
	46 (*1)			42 (2AZ–FE)		47 (*1)

: Relay Blocks

Code	See Page	Relay Blocks (Relay Block Location)
1	24	Engine Room R/B (Engine Compartment Left)

: Junction Block and Wire Harness Connector

Code	See Page	Junction Block and Wire Harness (Connector Location)
1A	27	Engine Room Main Wire and Engine Room J/B (Engine Compartment Left)
1C		
1E		
1L	27	Engine Wire and Engine Room J/B (Engine Compartment Left)
2F	30	Instrument Panel Wire and Driver Side J/B (Lower Finish Panel)
3A	36 (*2)	Instrument Panel Wire and Passenger Side J/B (Instrument Panel Brace RH)
	37 (*3)	
3B	36 (*2)	
3C	37 (*3)	

: Connector Joining Wire Harness and Wire Harness

Code	See Page	Joining Wire Harness and Wire Harness (Connector Location)
IG2	56 (C/P)	Engine Room Main Wire and Instrument Panel Wire (Behind the Radio and Player)
	58 (*1)	
IG7	56 (C/P)	
	58 (*1)	
IG8	56 (C/P)	
	58 (*1)	
IG9	56 (C/P)	
IM1	57 (C/P)	Engine Wire and Instrument Panel Wire (Behind the Glove Box)
	59 (*1)	

* 1 : Convertible * 2 : C/P, Convertible w/ VSC * 3 : Convertible w/o VSC

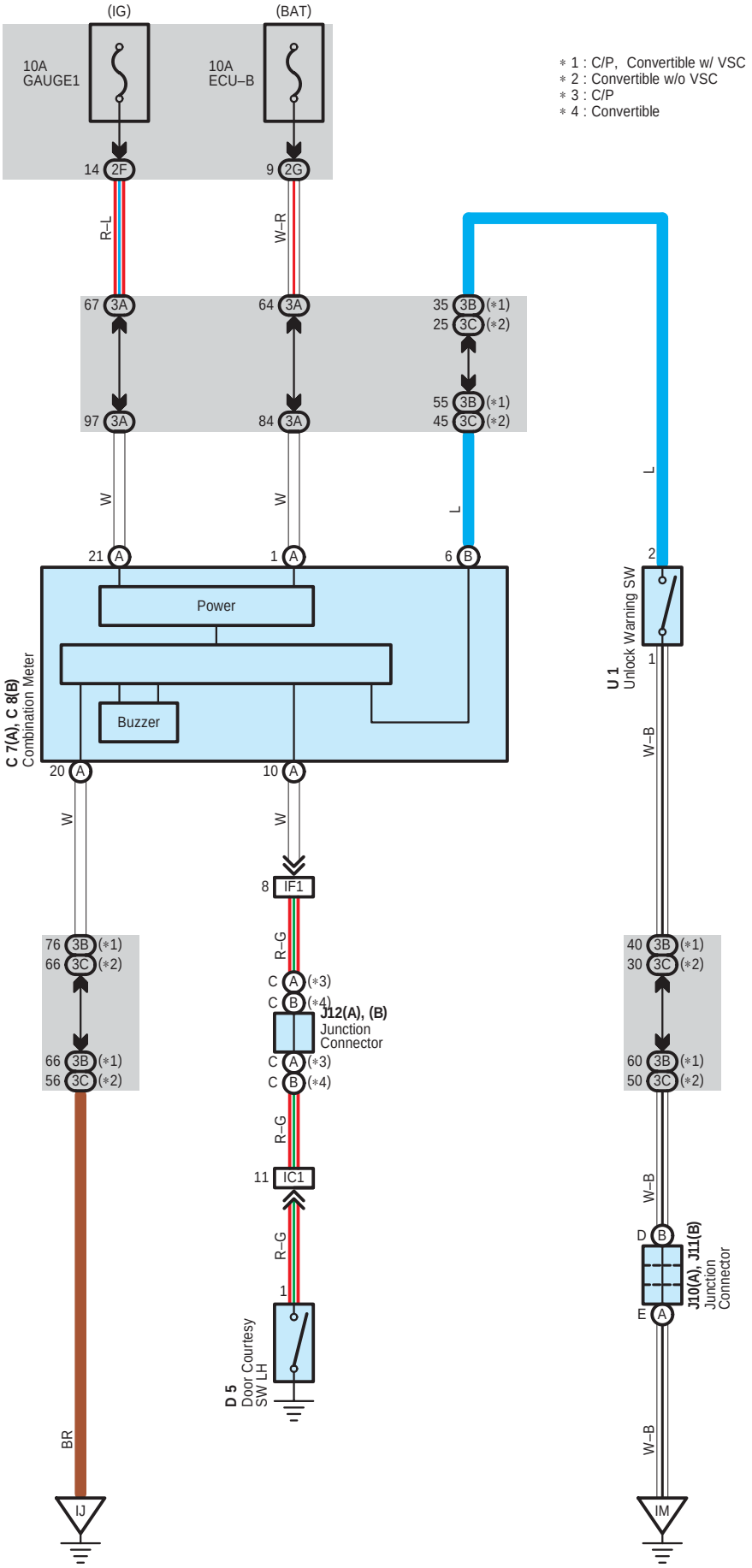
(IG)
(BAT)
10A
GAUGE1
10A
ECU–B
∗1 : C/P, Convertible w/ VSC
∗2 : Convertible w/o VSC
∗3 : C/P
∗4 : Convertible
14 2F
9 2G
R–L
W–R
67 3A
64 3A
35 3B (∗1)
25 3C (∗2)
97 3A
84 3A
55 3B (∗1)
45 3C (∗2)
W
W
L
L
21 A
1 A
6 B
2
Power
Buzzer
C 7(A), C 8(B)
Combination Meter
U 1
Unlock Warning SW
1
W–B
20 A
10 A
W
W
8 IF1
76 3B (∗1)
66 3C (∗2)
R–G
C A (∗3)
C B (∗4)
J12(A), (B)
Junction
Connector
40 3B (∗1)
30 3C (∗2)
66 3B (∗1)
56 3C (∗2)
C A (∗3)
C B (∗4)
60 3B (∗1)
50 3C (∗2)
R–G
11 IC1
W–B
D B
J10(A), J11(B)
Junction
Connector
E A
R–G
1
D 5
Door Courtesy
SW LH
W–B
BR
IJ
IM

System Outline

Key Reminder System

With the ignition key inserted in the key cylinder (Unlock warning SW on), the ignition SW still off and driver's door open (Door courtesy SW on), when a signal is input to TERMINAL (A) 10 of the combination meter, the combination meter operates, current flows from TERMINAL (A) 1 of the combination meter to TERMINAL (A) 20 GROUND and key reminder buzzer sounds.

: Parts Location

Code		See Page	Code		See Page	Code		See Page
C7	A	44 (C/P)	D5		50 (*1)	J12	A	45 (C/P)
		46 (*1)	J10	A	45 (C/P)		B	47 (*1)
C8	B	44 (C/P)			47 (*1)	U1		45 (C/P)
		46 (*1)	J11	B	45 (C/P)			47 (*1)
D5		48 (C/P)			47 (*1)			

: Junction Block and Wire Harness Connector

Code	See Page	Junction Block and Wire Harness (Connector Location)
2F	30	Instrument Panel Wire and Driver Side J/B (Lower Finish Panel)
2G	31	
3A	36 (*2)	Instrument Panel Wire and Passenger Side J/B (Instrument Panel Brace RH)
	37 (*3)	
3B	36 (*2)	
3C	37 (*3)	

: Connector Joining Wire Harness and Wire Harness

Code	See Page	Joining Wire Harness and Wire Harness (Connector Location)
IC1	56 (C/P)	Instrument Panel Wire and Floor No.1 Wire (Left Kick Panel)
	58 (*1)	
IF1	56 (C/P)	Instrument Panel Wire and Instrument Panel Wire (Instrument Panel Brace LH)
	58 (*1)	

: Ground Points

Code	See Page	Ground Points Location
IJ	56 (C/P)	Instrument Panel Brace LH
	58 (*1)	
IM	56 (C/P)	Instrument Panel Reinforcement RH
	58 (*1)	

* 1 : Convertible * 2 : C/P, Convertible w/ VSC * 3 : Convertible w/o VSC

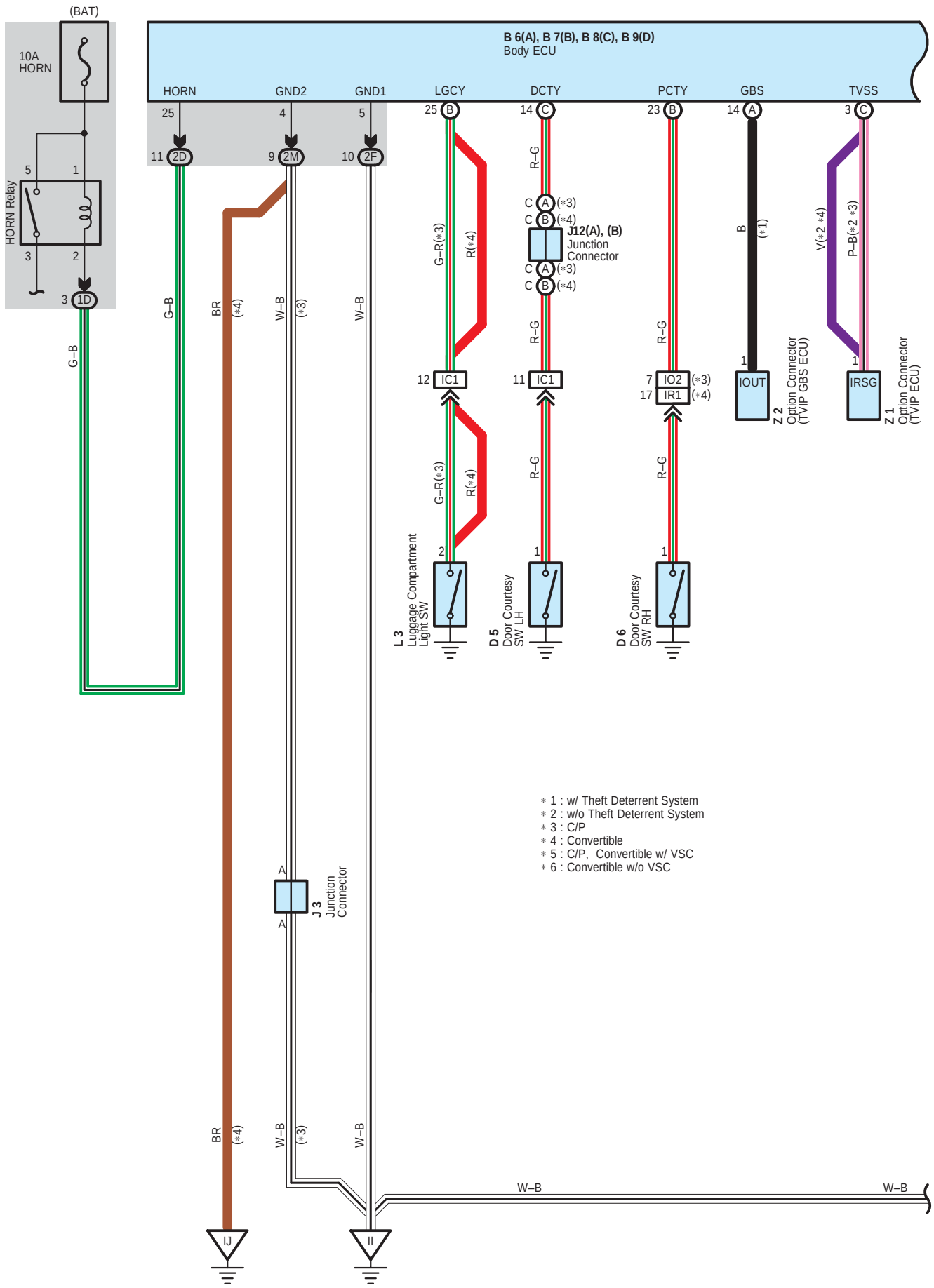
(BAT)
10A
HORN
HORN Relay
B 6(A), B 7(B), B 8(C), B 9(D)
Body ECU
HORN
GND2
GND1
LGCY
DCTY
PCTY
GBS
TVSS
J12(A), (B)
Junction
Connector
IC1
IO2
IR1
IOUT
IRSG
L 3
Luggage Compartment
Light SW
D 5
Door Courtesy
SW LH
D 6
Door Courtesy
SW RH
Z 2
Option Connector
(TVIP GBS ECU)
Z 1
Option Connector
(TVIP ECU)
J 3
Junction
Connector
∗ 1 : w/ Theft Deterrent System
∗ 2 : w/o Theft Deterrent System
∗ 3 : C/P
∗ 4 : Convertible
∗ 5 : C/P, Convertible w/ VSC
∗ 6 : Convertible w/o VSC

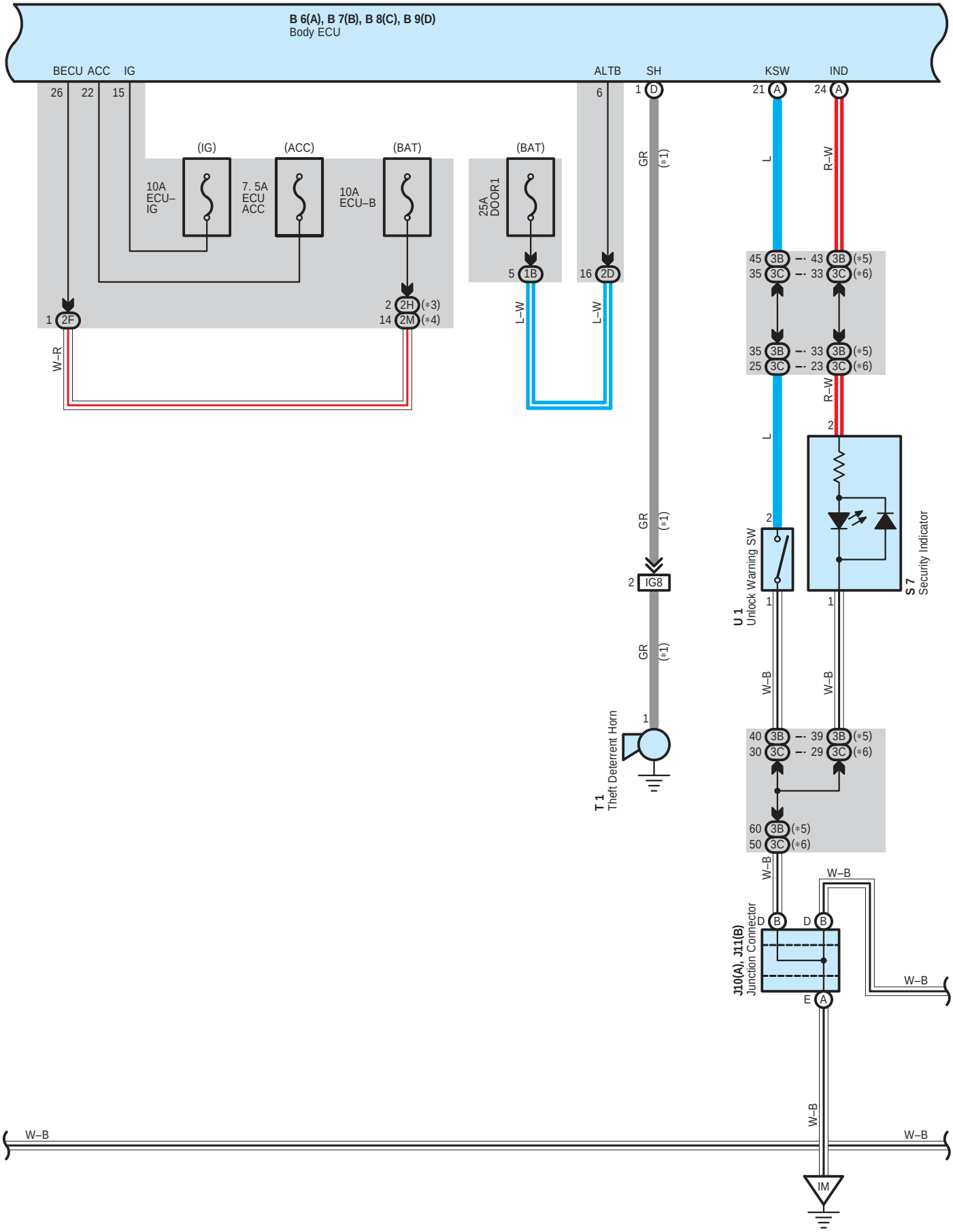
B 6(A), B 7(B), B 8(C), B 9(D)
Body ECU
BECU ACC IG
ALTB SH
KSW IND
26 22 15
6
1 D
21 A
24 A
(IG)
(ACC)
(BAT)
(BAT)
10A ECU–IG
7. 5A ECU ACC
10A ECU–B
25A DOOR1
5 1B
16 2D
1 2F
2 2H (*3)
14 2M (*4)
W–R
L–W
L–W
GR (*1)
L
R–W
45 3B 43 3B (*5)
35 3C 33 3C (*6)
35 3B 33 3B (*5)
25 3C 23 3C (*6)
R–W
L
2
2
IG8
GR (*1)
GR (*1)
1
U 1
Unlock Warning SW
S 7
Security Indicator
W–B
W–B
T 1
Theft Deterrent Horn
40 3B 39 3B (*5)
30 3C 29 3C (*6)
60 3B (*5)
50 3C (*6)
W–B
W–B
J10(A), J11(B)
Junction Connector
D B
D B
E A
W–B
W–B
W–B
W–B
IM

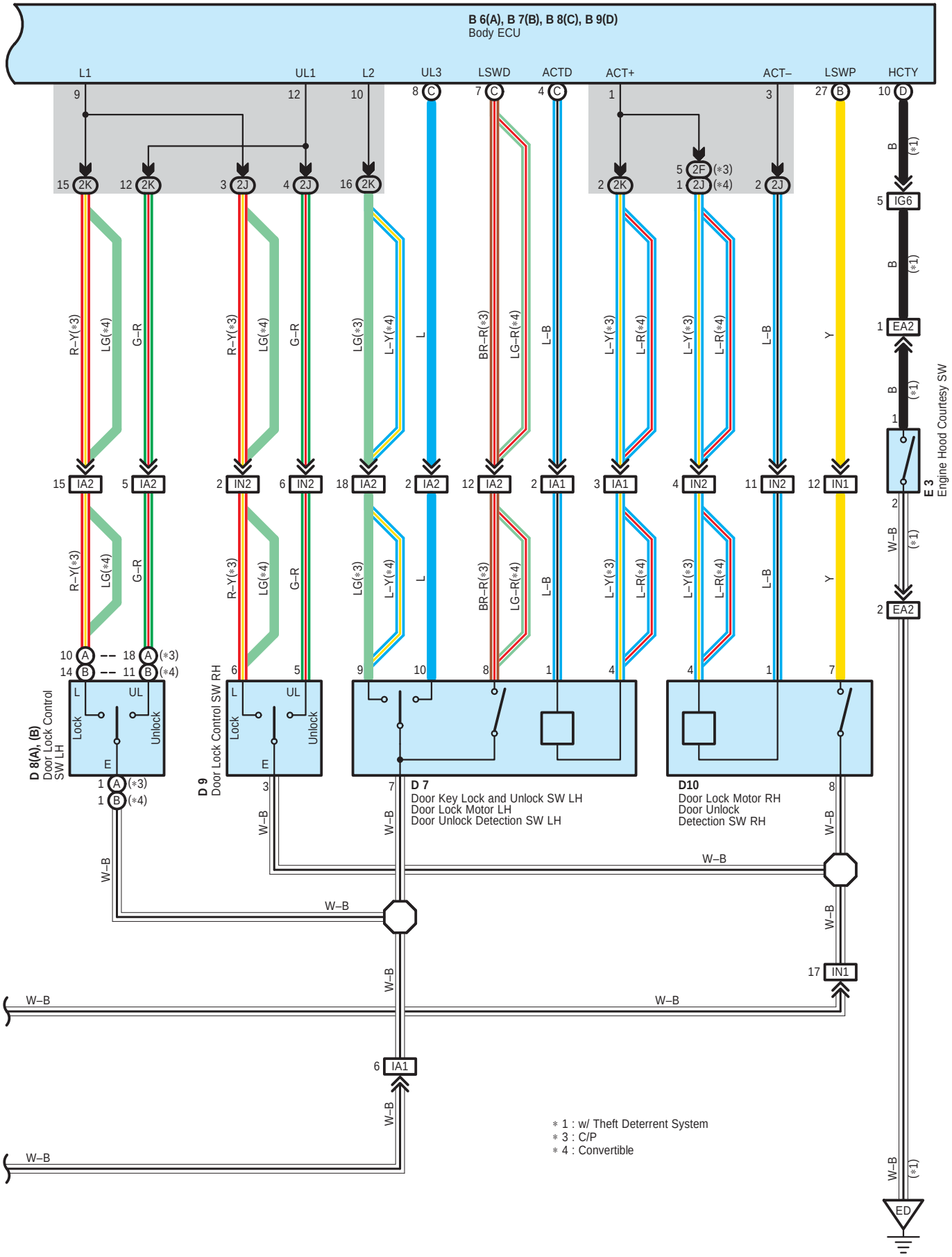
B 6(A), B 7(B), B 8(C), B 9(D)
Body ECU
L1
UL1
L2
UL3
LSWD
ACTD
ACT+
ACT–
LSWP
HCTY
D 8(A), (B)
Door Lock Control SW LH
D 9
Door Lock Control SW RH
D 7
Door Key Lock and Unlock SW LH
Door Lock Motor LH
Door Unlock Detection SW LH
D10
Door Lock Motor RH
Door Unlock Detection SW RH
E 3
Engine Hood Courtesy SW
Lock
Unlock
W–B
R–Y(*3)
LG(*4)
G–R
LG(*3)
L–Y(*4)
L
BR–R(*3)
LG–R(*4)
L–B
L–Y(*3)
L–R(*4)
Y
IA2
IN2
IA1
IN1
IG6
EA2
ED
* 1 : w/ Theft Deterrent System
* 3 : C/P
* 4 : Convertible

System Outline

1. Manual Unlock Operation

When the door lock control SW of the driver's or passenger's side door is pushed to UNLOCK, the door lock will unlock.

2. Manual Lock Operation

When the door lock control SW of the driver's or passenger's side door is pushed to LOCK, the door lock will lock.

3. Door Key Unlock Operation

∗ Unlock operation from driver's side door

When the driver's side door is unlocked once using the ignition key, only the driver's side door is unlocked. If this operation is repeated within 3 seconds, all the other doors are unlocked.

∗ Unlock operation from front passenger's side door

When the front passenger's side door is unlocked using the ignition key, all the other doors are unlocked, too.

: Parts Location

Code		See Page	Code		See Page	Code		See Page
B6	A	44 (C/P)	D8	A	48 (C/P)	J12	B	47 (*1)
		46 (*1)		B	50 (*1)	L3		48 (C/P)
B7	B	44 (C/P)	D9		48 (C/P)			50 (*1)
		46 (*1)			50 (*1)	S7		45 (C/P)
B8	C	44 (C/P)	D10		48 (C/P)			47 (*1)
		46 (*1)			50 (*1)	T1		41 (3MZ–FE)
B9	D	44 (C/P)	E3		40 (3MZ–FE)			43 (2AZ–FE)
		46 (*1)			42 (2AZ–FE)	U1		45 (C/P)
D5		48 (C/P)	J3		45 (C/P)			47 (*1)
		50 (*1)	J10	A	45 (C/P)	Z1		45 (C/P)
D6		48 (C/P)			47 (*1)			47 (*1)
		50 (*1)	J11	B	45 (C/P)	Z2		45 (C/P)
D7		48 (C/P)			47 (*1)			47 (*1)
		50 (*1)	J12	A	45 (C/P)			

: Junction Block and Wire Harness Connector

Code	See Page	Junction Block and Wire Harness (Connector Location)
1B	27	Engine Room Main Wire and Engine Room J/B (Engine Compartment Left)
1D		
2D	30	Engine Room Main Wire and Driver Side J/B (Lower Finish Panel)
2F	30	Instrument Panel Wire and Driver Side J/B (Lower Finish Panel)
2H	31	
2J	30	
2K		
2M		
3B	36 (*2)	Instrument Panel Wire and Passenger Side J/B (Instrument Panel Brace RH)
3C	37 (*3)	

* 1 : Convertible * 2 : C/P, Convertible w/ VSC * 3 : Convertible w/o VSC

: Connector Joining Wire Harness and Wire Harness

Code	See Page	Joining Wire Harness and Wire Harness (Connector Location)
EA2	54 (3MZ–FE)	Engine Room Main Wire and Engine Room No.2 Wire (Radiator Side Support LH)
	55 (2AZ–FE)	
IA1	56 (C/P)	Front Door LH Wire and Instrument Panel Wire (Left Kick Panel)
	58 (*1)	
IA2	56 (C/P)	
	58 (*1)	
IC1	56 (C/P)	Instrument Panel Wire and Floor No.1 Wire (Left Kick Panel)
	58 (*1)	
IG6	56 (C/P)	Engine Room Main Wire and Instrument Panel Wire (Behind the Radio and Player)
	58 (*1)	
IG8	56 (C/P)	
	58 (*1)	
IN1	57 (C/P)	Front Door RH Wire and Instrument Panel Wire (Right Kick Panel)
	59 (*1)	
IN2	57 (C/P)	
	59 (*1)	
IO2	57 (C/P)	Instrument Panel Wire and Floor No.2 Wire (Right Kick Panel)
IR1	59 (*1)	

: Ground Points

Code	See Page	Ground Points Location
ED	54 (3MZ–FE)	Left Fender
	55 (2AZ–FE)	
II	56 (C/P)	Cowl Side Panel LH
	58 (*1)	
IJ	58 (*1)	Instrument Panel Brace LH
IM	56 (C/P)	Instrument Panel Reinforcement RH
	58 (*1)	

* 1 : Convertible * 2 : C/P, Convertible w/ VSC * 3 : Convertible w/o VSC

Wireless Door Lock Control

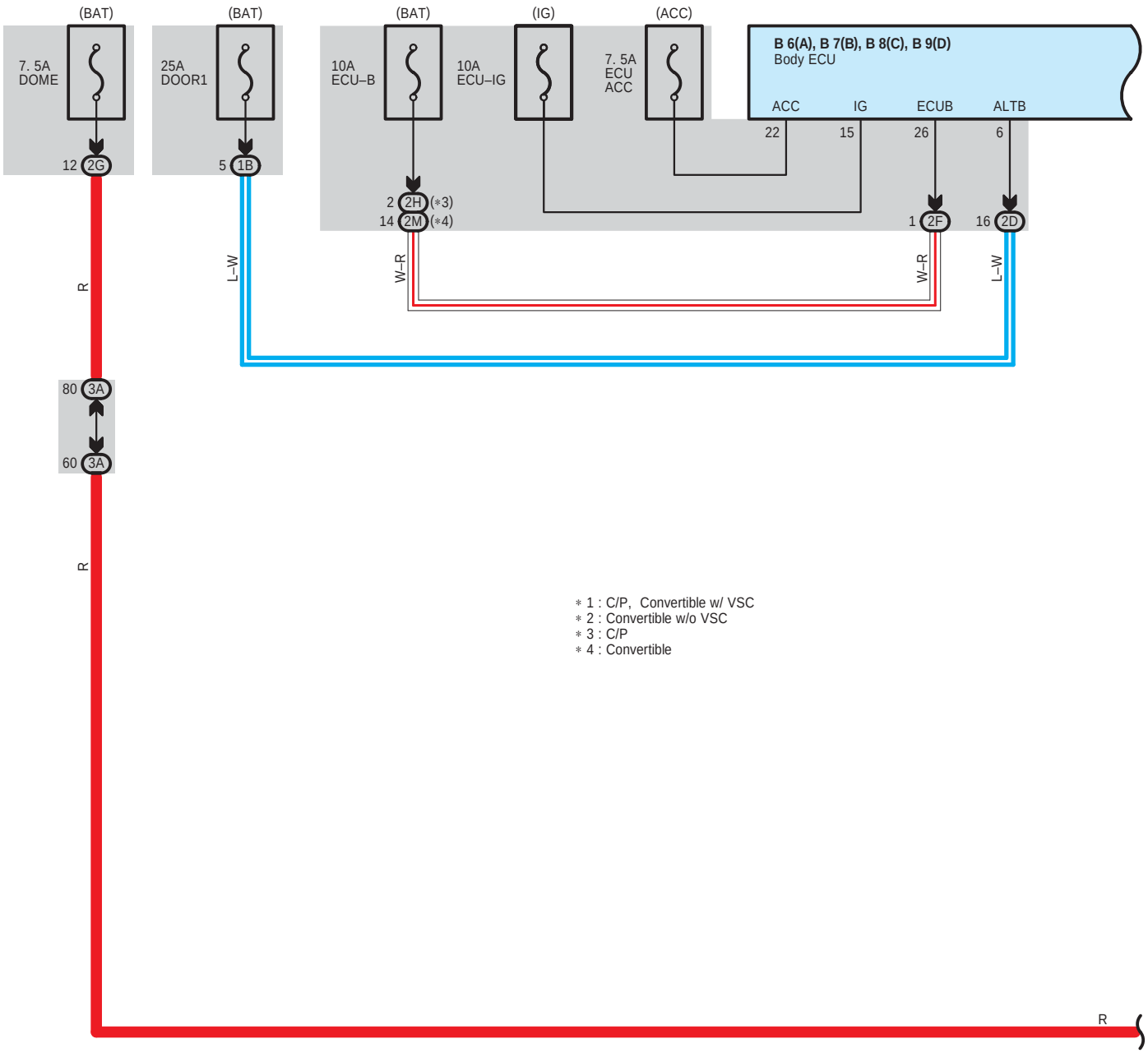

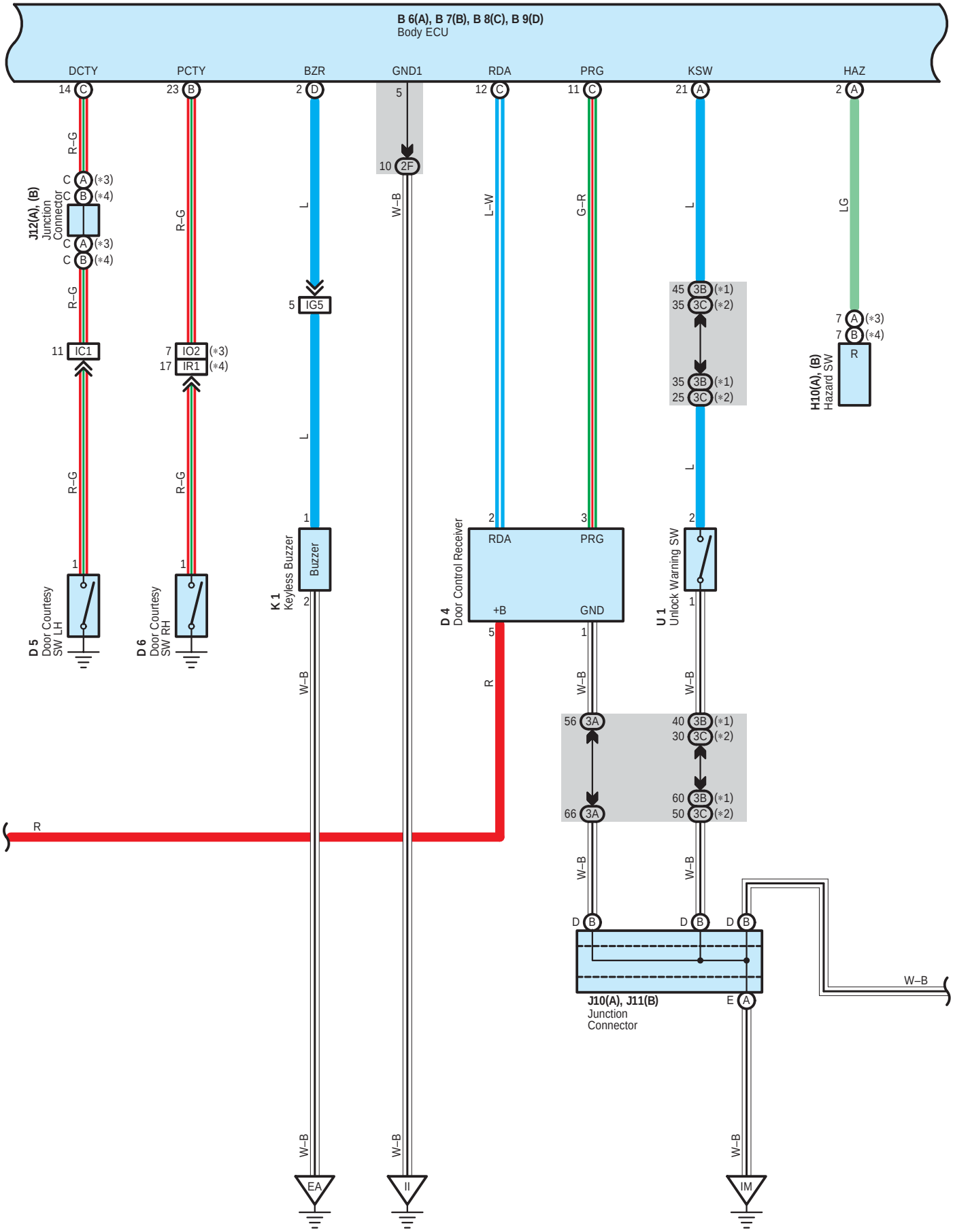
B 6(A), B 7(B), B 8(C), B 9(D)
Body ECU
DCTY
PCTY
BZR
GND1
RDA
PRG
KSW
HAZ
J12(A), (B)
Junction
Connector
IC1
IO2
IR1
IG5
2F
D 5
Door Courtesy
SW LH
D 6
Door Courtesy
SW RH
K 1
Keyless Buzzer
Buzzer
D 4
Door Control Receiver
+B
GND
U 1
Unlock Warning SW
H10(A), (B)
Hazard SW
J10(A), J11(B)
Junction
Connector
EA
II
IM
R–G
L
L–W
G–R
LG
W–B
R

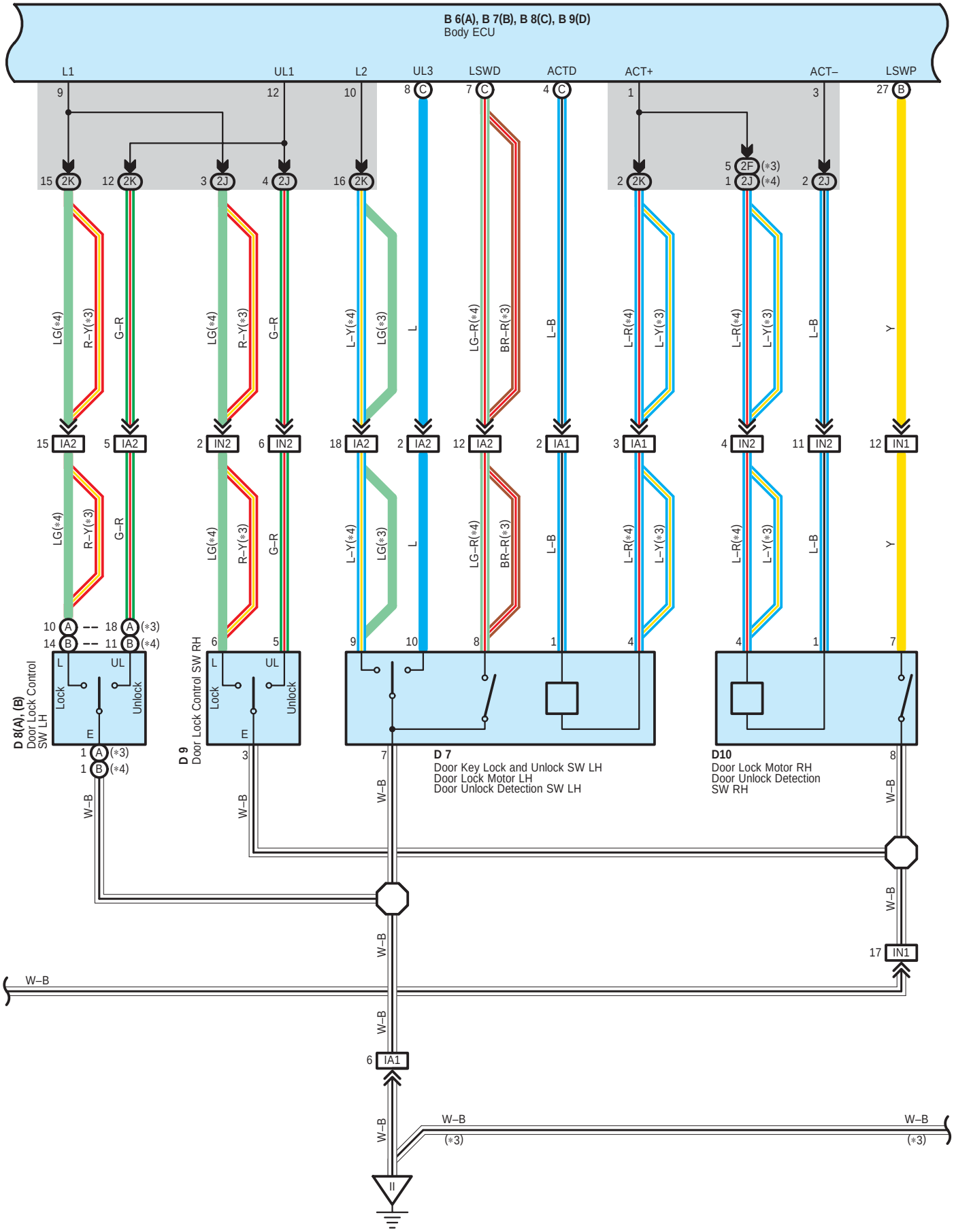
B 6(A), B 7(B), B 8(C), B 9(D)
Body ECU
L1
UL1
L2
UL3
LSWD
ACTD
ACT+
ACT–
LSWP
D 8(A), (B)
Door Lock Control SW LH
D 9
Door Lock Control SW RH
Lock
Unlock
D 7
Door Key Lock and Unlock SW LH
Door Lock Motor LH
Door Unlock Detection SW LH
D10
Door Lock Motor RH
Door Unlock Detection SW RH
W–B

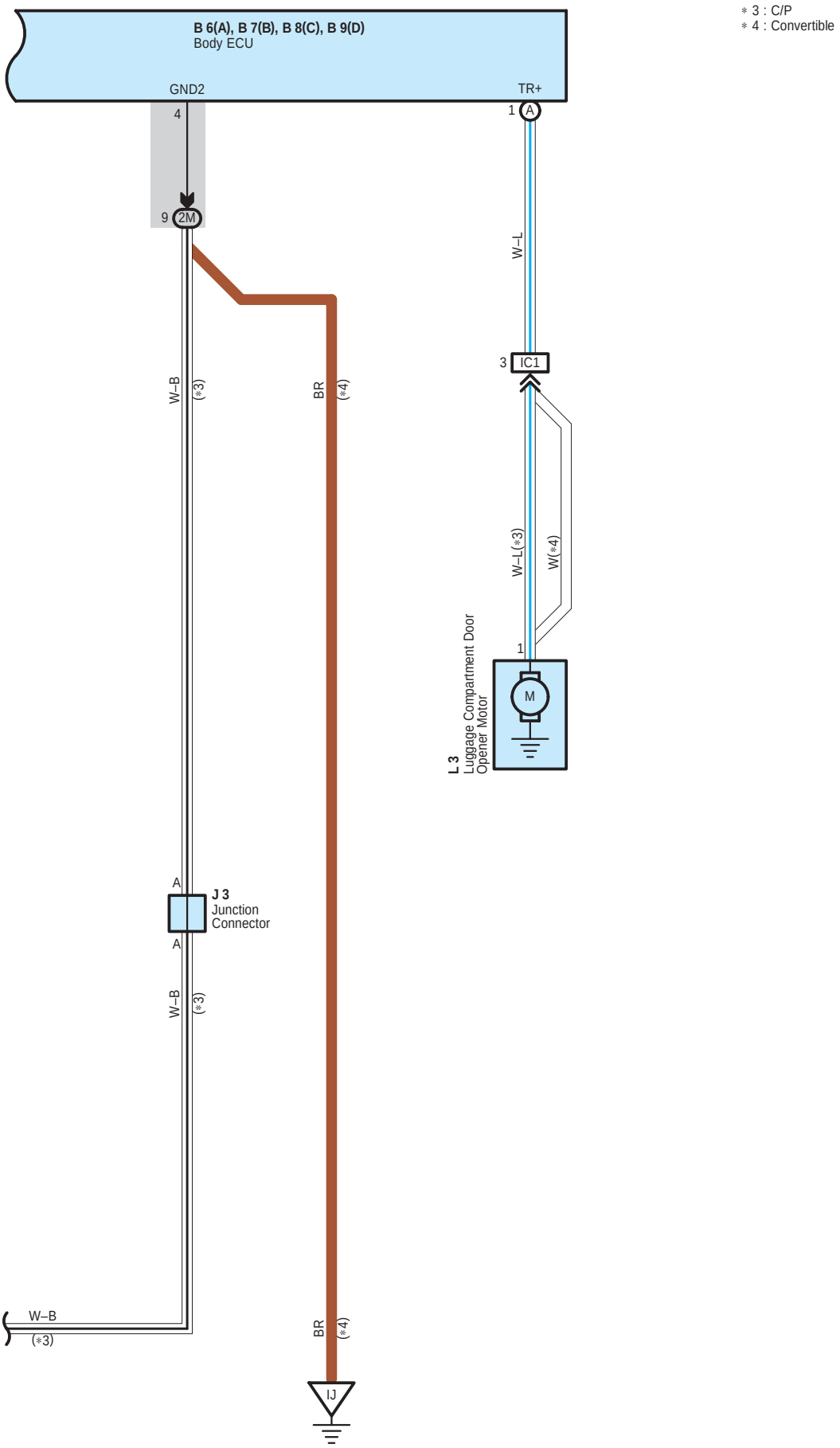

* 3 : C/P
* 4 : Convertible

Wireless Door Lock Control

System Outline

Door lock control (Lock and unlock) and panic control (Theft alarm and flash) is performed by remote control, without the ignition key inserted in the door key cylinder, using low–power electrical waves emitted by a transmitter.

1. Wireless Door Lock or Unlock Normal Operation

With the ignition key not inserted into the ignition key cylinder (Unlock warning SW off) and all the doors completely closed, when the lock or unlock button (Transmitter) is pushed, the door control receiver receives the electrical waves from the transmitter, and sends a signal to the body ECU, causing it to operate.
As a result, the body ECU judges whether the door is locked or unlocked based on the signal from the door lock motor and door unlock detection SW, and sends a signal to switch the condition from lock to unlock or vice versa, causing the door lock motor to operate.

2. Visual Confirmation of Lock or Unlock

If all doors indicate that they are locked after the lock command, turn signal light will flash once. If any door indicates that it is open after the unlock command, turn signal light will flash twice.

3. Buzzer Sound Function

If all doors indicate that they are locked after the lock command, the keyless buzzer goes on once. If any door indicates that it is open after the unlock command, the keyless buzzer goes on twice.

4. Illuminated Entry Function

When the body ECU detects the unlock state after the unlock operation has been made, it turns on the lights, such as the ignition key cylinder light and interior light for approx. 15 sec. If all the doors are locked during this operation, lighting is cancelled and the lights immediately fade out.

5. Wireless Door Unlock Operation

Pushing the unlock button (Transmitter) once, driver's door is unlocked. Furthermore, pushing the button again within 3 seconds, the other doors are unlocked.

6. Automatic Lock Operation

With the ignition key not inserted into the ignition key cylinder (Unlock warning SW off) and all the doors completely closed, after pushing the button (Transmitter) to unlock all the doors, if a door is not opened within 30 seconds, all the doors will be automatically relocked.

7. Wireless Control Stop Function

If a door is open (Door courtesy SW on), a signal is input from the door courtesy SW to the body ECU stopping wireless door lock or unlock.
If the ignition key is in the ignition key cylinder (Unlock warning SW on), the unlock warning SW inputs a signal to the body ECU stopping wireless door lock or unlock.

8. Repeat Function

If the door lock or unlock condition does not change after wireless door lock or unlock operation, 2 seconds later, the body ECU sends current again to the door lock motor.

9. Remote Panic Operation

Panic will function when doors are locked or unlocked, open or closed. When the panic button (Transmitter) is pushed once, theft alarm and horn sounds and turn signal light, headlights and taillight flash. Then, the panic or the unlock button (Transmitter) is pushed once more, sounding and flashing will stop. Panic will not function when ignition key is in ignition key cylinder.

○ : Parts Location

Code		See Page	Code		See Page	Code		See Page
B6	A	44 (C/P)	D6		50 (*1)	J10	A	47 (*1)
		46 (*1)	D7		48 (C/P)	J11	B	45 (C/P)
B7	B	44 (C/P)			50 (*1)			47 (*1)
		46 (*1)	D8	A	48 (C/P)	J12	A	45 (C/P)
B8	C	44 (C/P)		B	50 (*1)		B	47 (*1)
		46 (*1)	D9		48 (C/P)	K1		41 (3MZ–FE)
B9	D	44 (C/P)			50 (*1)			43 (2AZ–FE)
		46 (*1)	D10		48 (C/P)	L3		48 (C/P)
D4		44 (C/P)			50 (*1)			50 (*1)
		46 (*1)	H10	A	44 (C/P)	U1		45 (C/P)
D5		48 (C/P)		B	46 (*1)			47 (*1)
		50 (*1)	J3		45 (C/P)			
D6		48 (C/P)	J10	A	45 (C/P)			

: Junction Block and Wire Harness Connector

Code	See Page	Junction Block and Wire Harness (Connector Location)
1B	27	Engine Room Main Wire and Engine Room J/B (Engine Compartment Left)
2D	30	Engine Room Main Wire and Driver Side J/B (Lower Finish Panel)
2F	30	Instrument Panel Wire and Driver Side J/B (Lower Finish Panel)
2G	31	
2H		
2J	30	
2K		
2M		
3A	36 (*2)	Instrument Panel Wire and Passenger Side J/B (Instrument Panel Brace RH)
	37 (*3)	
3B	36 (*2)	
3C	37 (*3)	

: Connector Joining Wire Harness and Wire Harness

Code	See Page	Joining Wire Harness and Wire Harness (Connector Location)
IA1	56 (C/P)	Front Door LH Wire and Instrument Panel Wire (Left Kick Panel)
	58 (*1)	
IA2	56 (C/P)	
	58 (*1)	
IC1	56 (C/P)	Instrument Panel Wire and Floor No.1 Wire (Left Kick Panel)
	58 (*1)	
IG5	56 (C/P)	Engine Room Main Wire and Instrument Panel Wire (Behind the Radio and Player)
	58 (*1)	
IN1	57 (C/P)	Front Door RH Wire and Instrument Panel Wire (Right Kick Panel)
	59 (*1)	
IN2	57 (C/P)	
	59 (*1)	
IO2	57 (C/P)	Instrument Panel Wire and Floor No.2 Wire (Right Kick Panel)
IR1	59 (*1)	

* 1 : Convertible * 2 : C/P, Convertible w/ VSC * 3 : Convertible w/o VSC

▽ : **Ground Points**

Code	See Page	Ground Points Location
EA	54 (3MZ–FE)	Right Fender
	55 (2AZ–FE)	
II	56 (C/P)	Cowl Side Panel LH
	58 (*1)	
IJ	56 (C/P)	Instrument Panel Brace LH
	58 (*1)	
IM	56 (C/P)	Instrument Panel Reinforcement RH
	58 (*1)	

* 1 : Convertible * 2 : C/P, Convertible w/ VSC * 3 : Convertible w/o VSC

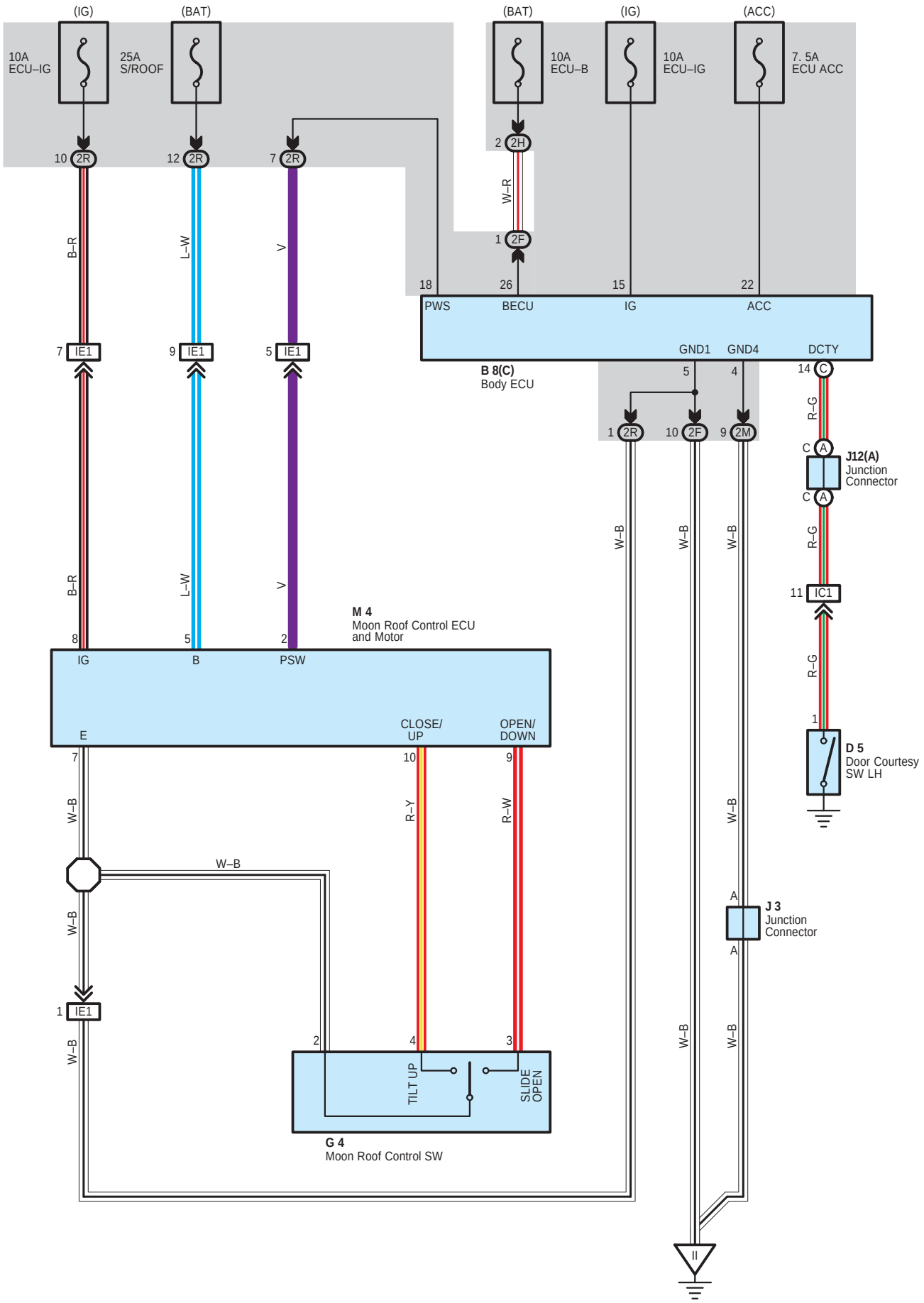
(IG)
(BAT)
(BAT)
(IG)
(ACC)
10A ECU–IG
25A S/ROOF
10A ECU–B
10A ECU–IG
7. 5A ECU ACC
10 2R
12 2R
7 2R
2 2H
W–R
1 2F
B–R
L–W
V
18
26
15
22
PWS
BECU
IG
ACC
7 IE1
9 IE1
5 IE1
GND1
GND4
DCTY
B 8(C)
Body ECU
5
4
14 C
R–G
1 2R
10 2F
9 2M
C A
J12(A)
Junction Connector
C A
R–G
W–B
W–B
W–B
11 IC1
R–G
M 4
Moon Roof Control ECU and Motor
8
5
2
IG
B
PSW
1
D 5
Door Courtesy SW LH
CLOSE/ UP
OPEN/ DOWN
E
7
10
9
W–B
R–Y
R–W
W–B
W–B
W–B
A
J 3
Junction Connector
A
1 IE1
W–B
W–B
W–B
2
4
3
TILT UP
SLIDE OPEN
G 4
Moon Roof Control SW

: Parts Location

Code		See Page	Code	See Page	Code		See Page
B8	C	44 (C/P)	G4	48 (C/P)	J12	A	45 (C/P)
D5		48 (C/P)	J3	45 (C/P)	M4		48 (C/P)

: Junction Block and Wire Harness Connector

Code	See Page	Junction Block and Wire Harness (Connector Location)
2F	30	Instrument Panel Wire and Driver Side J/B (Lower Finish Panel)
2H	31	
2M	30	
2R		

: Connector Joining Wire Harness and Wire Harness

Code	See Page	Joining Wire Harness and Wire Harness (Connector Location)
IC1	56 (C/P)	Instrument Panel Wire and Floor No.1 Wire (Left Kick Panel)
IE1	56 (C/P)	Instrument Panel Wire and Roof Wire (Inside of Front Left Pillar)

: Ground Points

Code	See Page	Ground Points Location
II	56 (C/P)	Cowl Side Panel LH

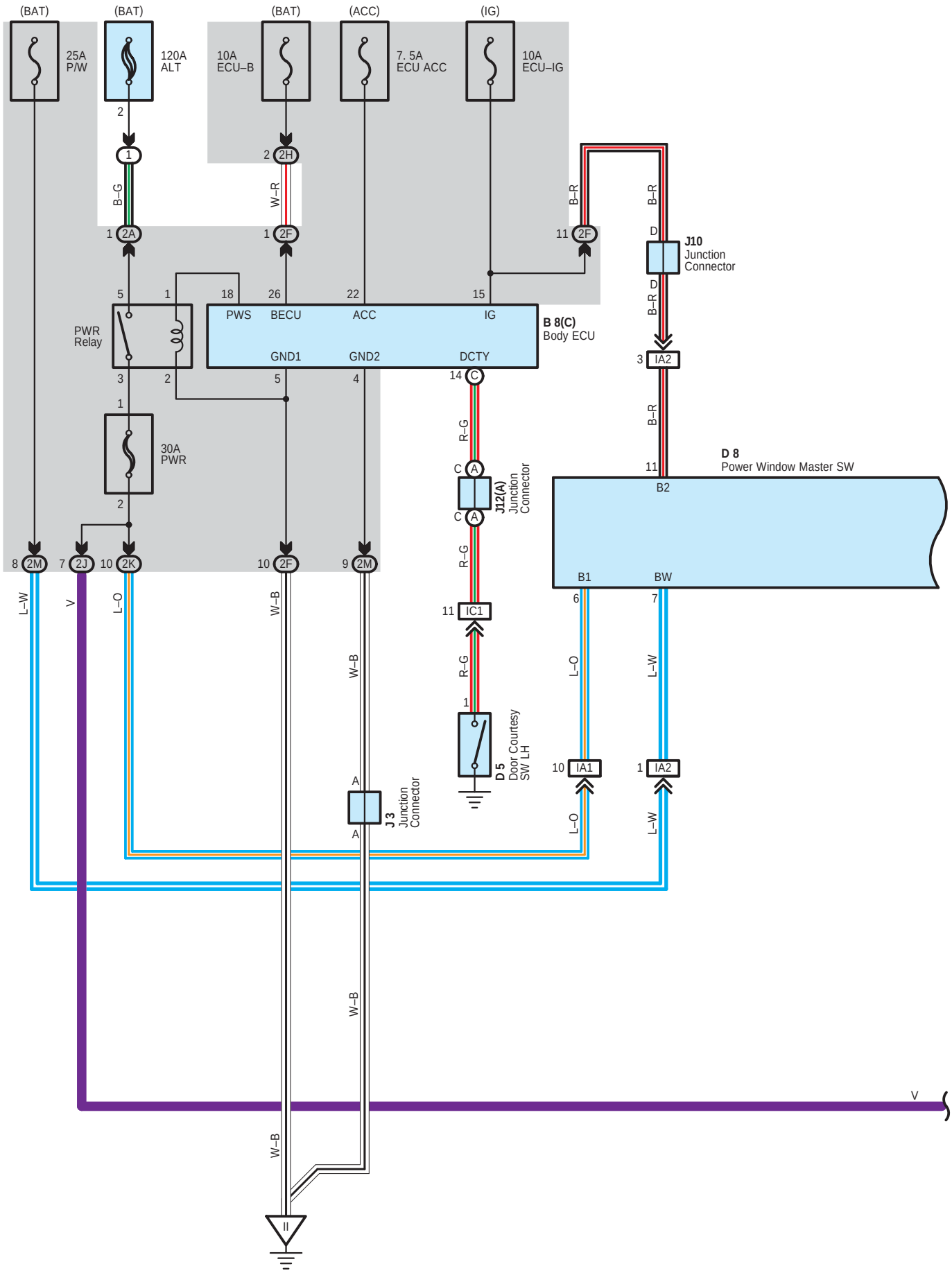
(BAT)
(BAT)
(BAT)
(ACC)
(IG)
25A
P/W
120A
ALT
10A
ECU–B
7. 5A
ECU ACC
10A
ECU–IG
B–G
W–R
B–R
B–R
J10
Junction
Connector
PWR
Relay
PWS
BECU
ACC
IG
B 8(C)
Body ECU
GND1
GND2
DCTY
IA2
30A
PWR
R–G
J12(A)
Junction
Connector
D 8
Power Window Master SW
B2
B1
BW
IC1
L–W
V
L–O
W–B
D 5
Door Courtesy
SW LH
IA1
J 3
Junction
Connector

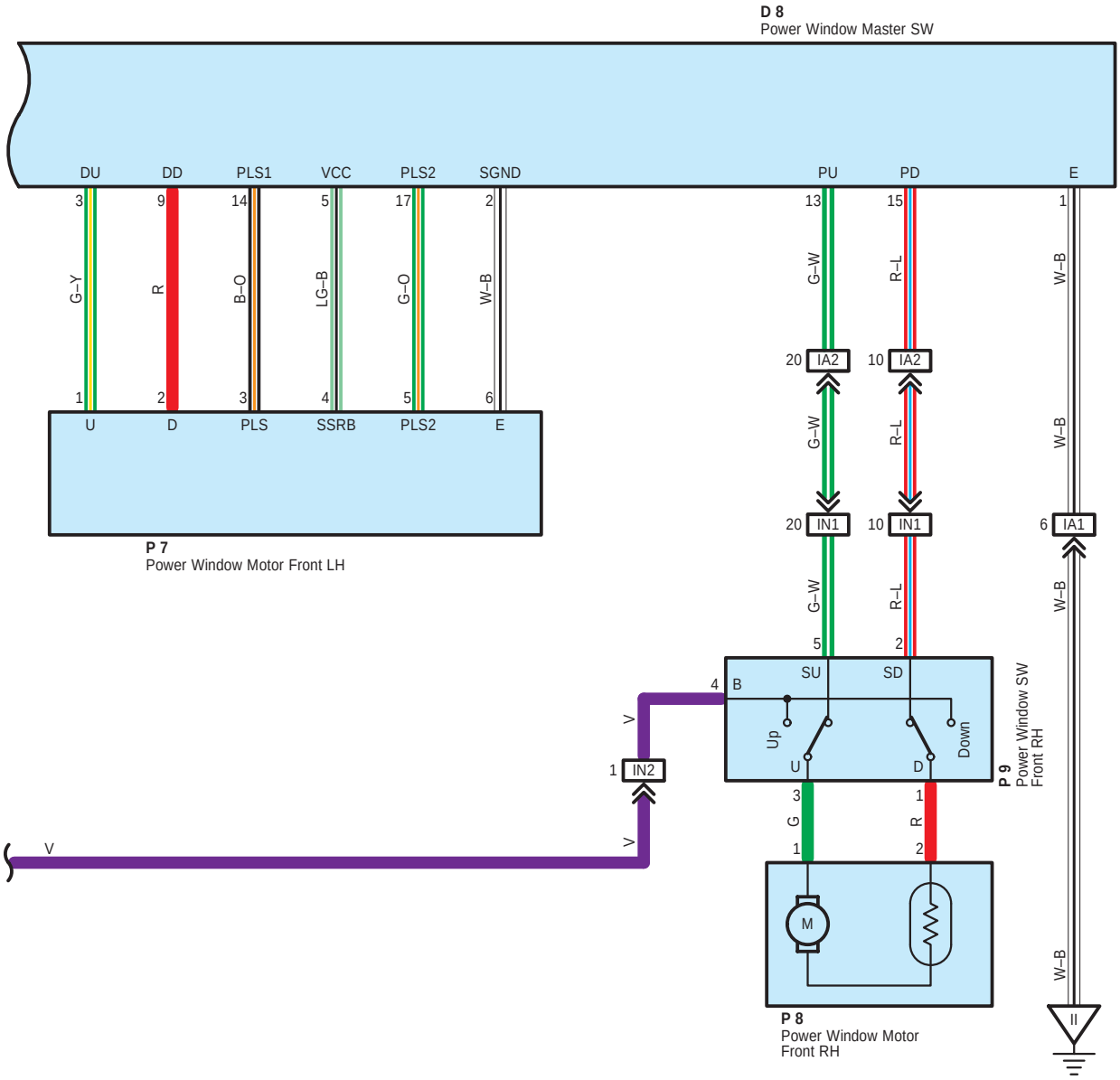
D 8
Power Window Master SW
DU
DD
PLS1
VCC
PLS2
SGND
PU
PD
E
3
9
14
5
17
2
13
15
1
G–Y
R
B–O
LG–B
G–O
W–B
G–W
R–L
W–B
20
IA2
10
IA2
1
2
3
4
5
6
U
D
PLS
SSRB
PLS2
E
G–W
R–L
W–B
20
IN1
10
IN1
6
IA1
P 7
Power Window Motor Front LH
G–W
R–L
W–B
5
2
4
B
SU
SD
V
Up
Down
1
IN2
U
D
P 9
Power Window SW
Front RH
3
1
G
R
V
V
1
2
M
P 8
Power Window Motor
Front RH
W–B

System Outline

1. Manual Operation (Driver's Window)

With the ignition SW turned on and with the power window master SW in UP position, the current flowing from TERMINAL B1 or BW of the power window master SW flows to TERMINAL DU of the master SW to TERMINAL 1 of the power window motor to TERMINAL 2 to TERMINAL DD of the master SW to TERMINAL E to GROUND and causes the power window motor to rotate in the up direction. The window ascends only while the SW is being pushed.

In down operation, the flow of current from TERMINAL B1 or BW of the power window master SW to TERMINAL DD of the master SW causes the flow of current from TERMINAL 2 of the power window motor to TERMINAL 1 to TERMINAL DU of the master SW to TERMINAL E to GROUND, flowing in the opposite detection to manual up operation and causing the motor to rotate in reverse, lowering the window.

2. Auto Down Operation (Driver's Window)

When the driver's window SW is pushed strongly to the down side, the current flowing to TERMINAL B1 or BW of the power window master SW flows to the down contact point and auto down contact point of the driver's SW.

This activates the relay (Down side) inside the power window master SW and the hold circuit also turns on at the same time, so the relay (Down side) remains activated even when the SW is released.

Current flows at this time from TERMINAL B1 or BW of the power window master SW to TERMINAL DD to TERMINAL 2 of the power window motor to TERMINAL 1 to TERMINAL DU of the power window master SW to TERMINAL E to GROUND, so the motor continues to operate until the driver's window is fully down.

When the driver's window finishes down operation and the hold circuit goes off, so the relay (Down side) also turns off. This stops the current flowing from TERMINAL B1 or BW of the power window master SW to TERMINAL DD is cut off, so the power window motor stops and auto down operation stops.

When the driver's SW is pulled to the up side during auto down operation, the hold circuit is turned off so the current flowing from TERMINAL B1 or BW of the power window master SW to TERMINAL DD is cut off and the power window motor stops. If the SW remains pulled up the relay (Up side) is activated, so current flows from TERMINAL B1 or BW of the power window master SW to TERMINAL DU to TERMINAL 1 of the power window motor to TERMINAL 2 to TERMINAL DD to TERMINAL E to GROUND, the power window motor rotates in the up direction and manual up operation occurs while the SW is pulled up.

3. Manual Operation (Front RH Window)

With the power window control SW front RH pulled to the up side, the current flowing from TERMINAL 4 of the power window control SW flows to TERMINAL 3 of the power window control SW to TERMINAL 1 of the power window motor to TERMINAL 2 to TERMINAL 1 of the power window control SW to TERMINAL 2 to TERMINAL PD of the master SW to TERMINAL E to GROUND and causes the power window motor front RH to rotate in the up direction. The up operation continues only while the power window control SW is pulled to the up side. When the window descends, the current flowing to the motor flows in the opposite direction, from TERMINAL 2 to TERMINAL 1, and the motor rotates in reverse. When the window lock SW is pushed to the lock side, the ground circuit to the front RH window becomes open.

As a result, even if Open/Close operation of the front RH window is tried, the current from TERMINAL E of the power window master SW is not grounded and the motor does not rotate, so the front RH window can not be operated and window lock occurs.

4. Key Off Power Window Operation

With the ignition SW turned from on to off, the body ECU operates and current flows from the ECU–B fuse to TERMINAL 26 of the body ECU to TERMINAL 10 to TERMINAL 1 of the power relay to TERMINAL 2 to GROUND for about 43 seconds. The same as normal operation, the current flows from TERMINAL 5 of the PWR relay to TERMINAL 3 to the PWR fuse to TERMINAL B1 of the power window master SW and TERMINAL 4 of the power window control SW front RH. As a result, for about 43 seconds after the ignition SW is turned off, the functioning of this ECU makes it possible to raise and lower the power window. Also, by opening the front doors (Door courtesy SW on) within about 43 seconds after turning the ignition SW to off, a signal is input to TERMINAL (C) 14 of the body ECU. As a result, the PWR relay turned off, and up and down movement of the power window stops.

: Parts Location

Code		See Page	Code		See Page	Code	See Page
B8	C	44 (C/P)	J3		45 (C/P)	P7	49 (C/P)
D5		48 (C/P)	J10		45 (C/P)	P8	49 (C/P)
D8		48 (C/P)	J12	A	45 (C/P)	P9	49 (C/P)

: Relay Blocks

Code	See Page	Relay Blocks (Relay Block Location)
1	24	Engine Room R/B (Engine Compartment Left)

: **Junction Block and Wire Harness Connector**

Code	See Page	Junction Block and Wire Harness (Connector Location)
2A	30	Engine Room Main Wire and Driver Side J/B (Lower Finish Panel)
2F	30	Instrument Panel Wire and Driver Side J/B (Lower Finish Panel)
2H	31	
2J	30	
2K		
2M		

: **Connector Joining Wire Harness and Wire Harness**

Code	See Page	Joining Wire Harness and Wire Harness (Connector Location)
IA1	56 (C/P)	Front Door LH Wire and Instrument Panel Wire (Left Kick Panel)
IA2		
IC1	56 (C/P)	Instrument Panel Wire and Floor No.1 Wire (Left Kick Panel)
IN1	57 (C/P)	Front Door RH Wire and Instrument Panel Wire (Right Kick Panel)
IN2		

: **Ground Points**

Code	See Page	Ground Points Location
II	56 (C/P)	Cowl Side Panel LH

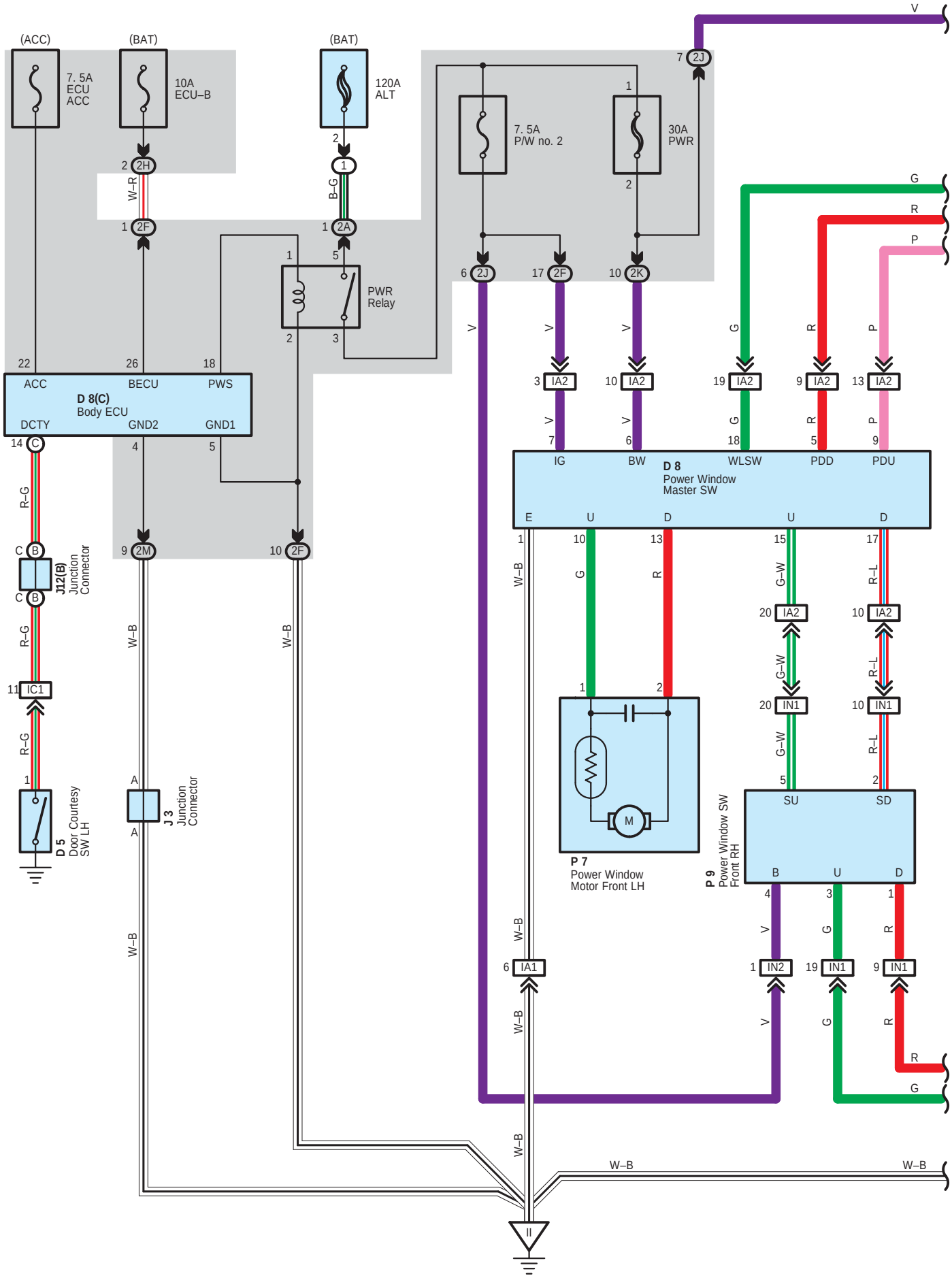
(ACC)
(BAT)
(BAT)
7. 5A
ECU
ACC
10A
ECU–B
120A
ALT
7. 5A
P/W no. 2
30A
PWR
PWR
Relay
D 8(C)
Body ECU
ACC
BECU
PWS
DCTY
GND2
GND1
D 8
Power Window
Master SW
IG
BW
WLSW
PDD
PDU
E
U
D
U
D
J12(B)
Junction
Connector
D 5
Door Courtesy
SW LH
J 3
Junction
Connector
P 7
Power Window
Motor Front LH
P 9
Power Window SW
Front RH
SU
SD
B
U
D
W–B
W–R
B–G
R–G
G–W
R–L
V
G
R
P

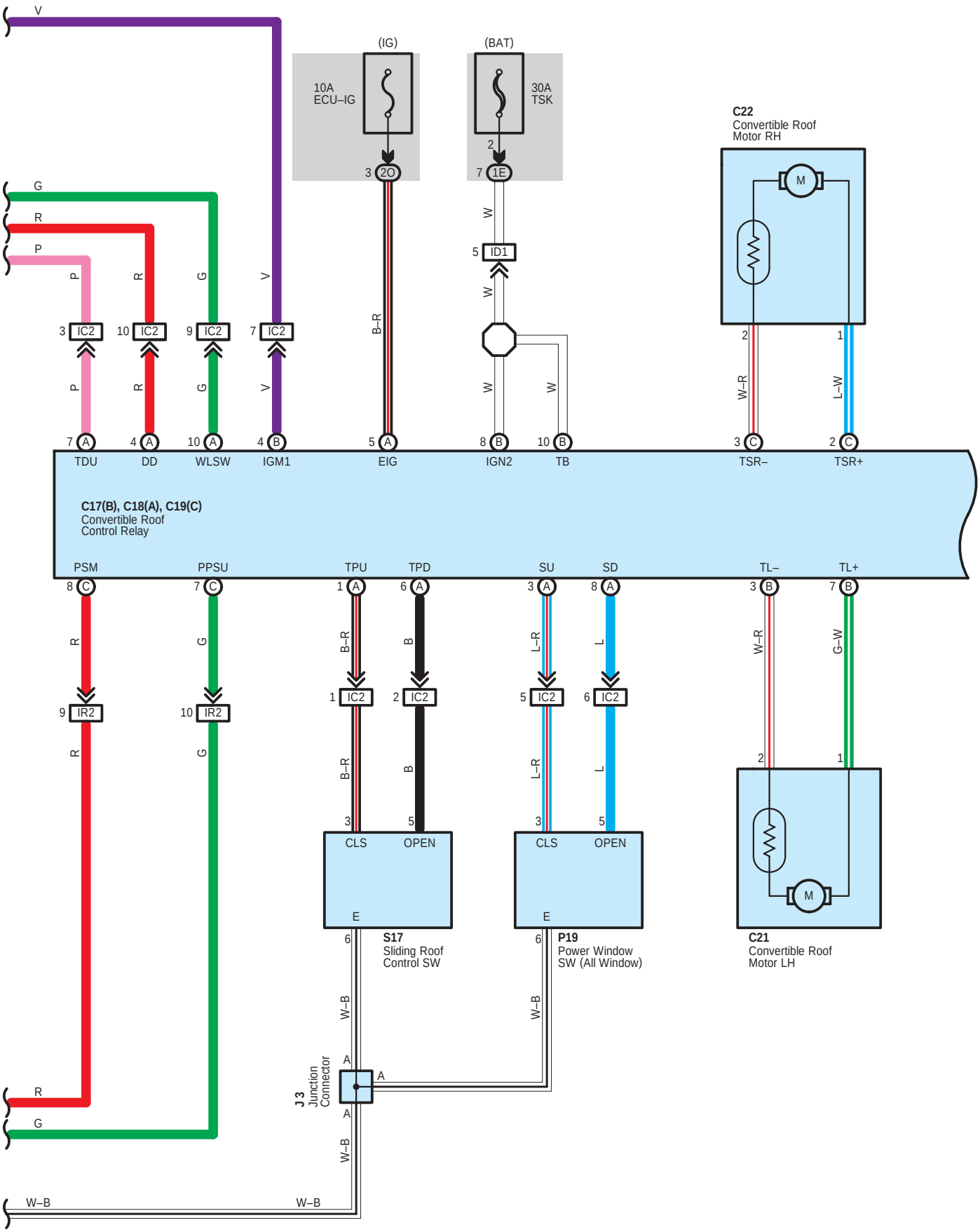
V
G
R
P
(IG)
10A
ECU–IG
3 2O
(BAT)
30A
TSK
2
7 1E
W
5 ID1
W
W
W
B–R
C22
Convertible Roof
Motor RH
M
2
1
W–R
L–W
3 C
2 C
3 IC2
10 IC2
9 IC2
7 IC2
7 A
4 A
10 A
4 B
5 A
8 B
10 B
TDU
DD
WLSW
IGM1
EIG
IGN2
TB
TSR–
TSR+
C17(B), C18(A), C19(C)
Convertible Roof
Control Relay
PSM
PPSU
TPU
TPD
SU
SD
TL–
TL+
8 C
7 C
1 A
6 A
3 A
8 A
3 B
7 B
B–R
B
L–R
L
W–R
G–W
9 IR2
10 IR2
1 IC2
2 IC2
5 IC2
6 IC2
3
5
CLS
OPEN
E
S17
Sliding Roof
Control SW
P19
Power Window
SW (All Window)
C21
Convertible Roof
Motor LH
6
W–B
A
J3
Junction
Connector
W–B

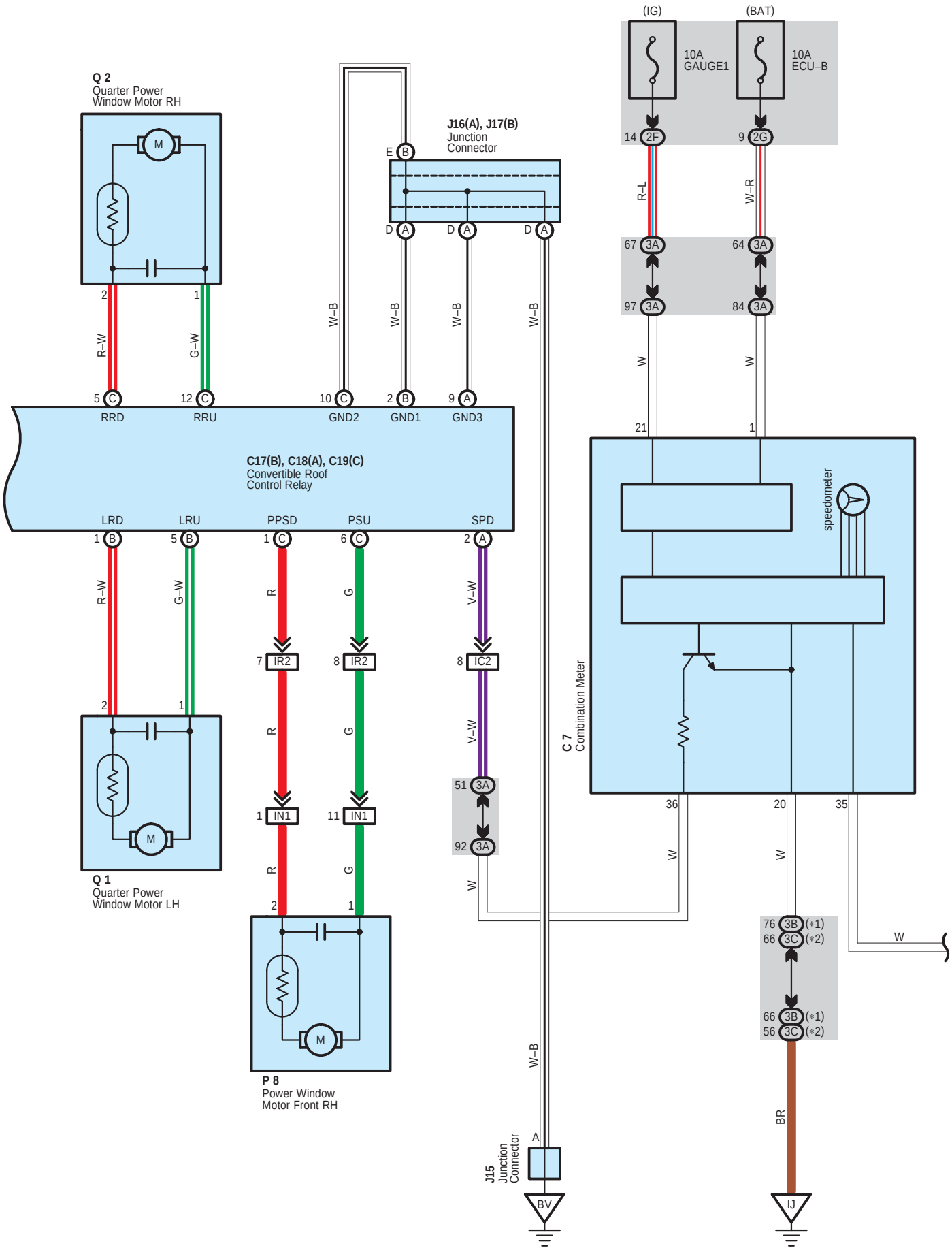
Q 2
Quarter Power
Window Motor RH
J16(A), J17(B)
Junction
Connector
(IG)
(BAT)
10A
GAUGE1
10A
ECU–B
14 2F
9 2G
R–L
W–R
67 3A
64 3A
97 3A
84 3A
W
W
21
1
R–W
G–W
W–B
W–B
W–B
W–B
5 C
12 C
10 C
2 B
9 A
RRD
RRU
GND2
GND1
GND3
C17(B), C18(A), C19(C)
Convertible Roof
Control Relay
LRD
LRU
PPSD
PSU
SPD
1 B
5 B
1 C
6 C
2 A
R
G
V–W
7 IR2
8 IR2
8 IC2
51 3A
92 3A
1 IN1
11 IN1
C 7
Combination Meter
speedometer
36
20
35
76 3B (*1)
66 3C (*2)
66 3B (*1)
56 3C (*2)
BR
Q 1
Quarter Power
Window Motor LH
P 8
Power Window
Motor Front RH
J15
Junction
Connector
BV
IJ

∗ 1 : w/ VSC
∗ 2 : w/o VSC

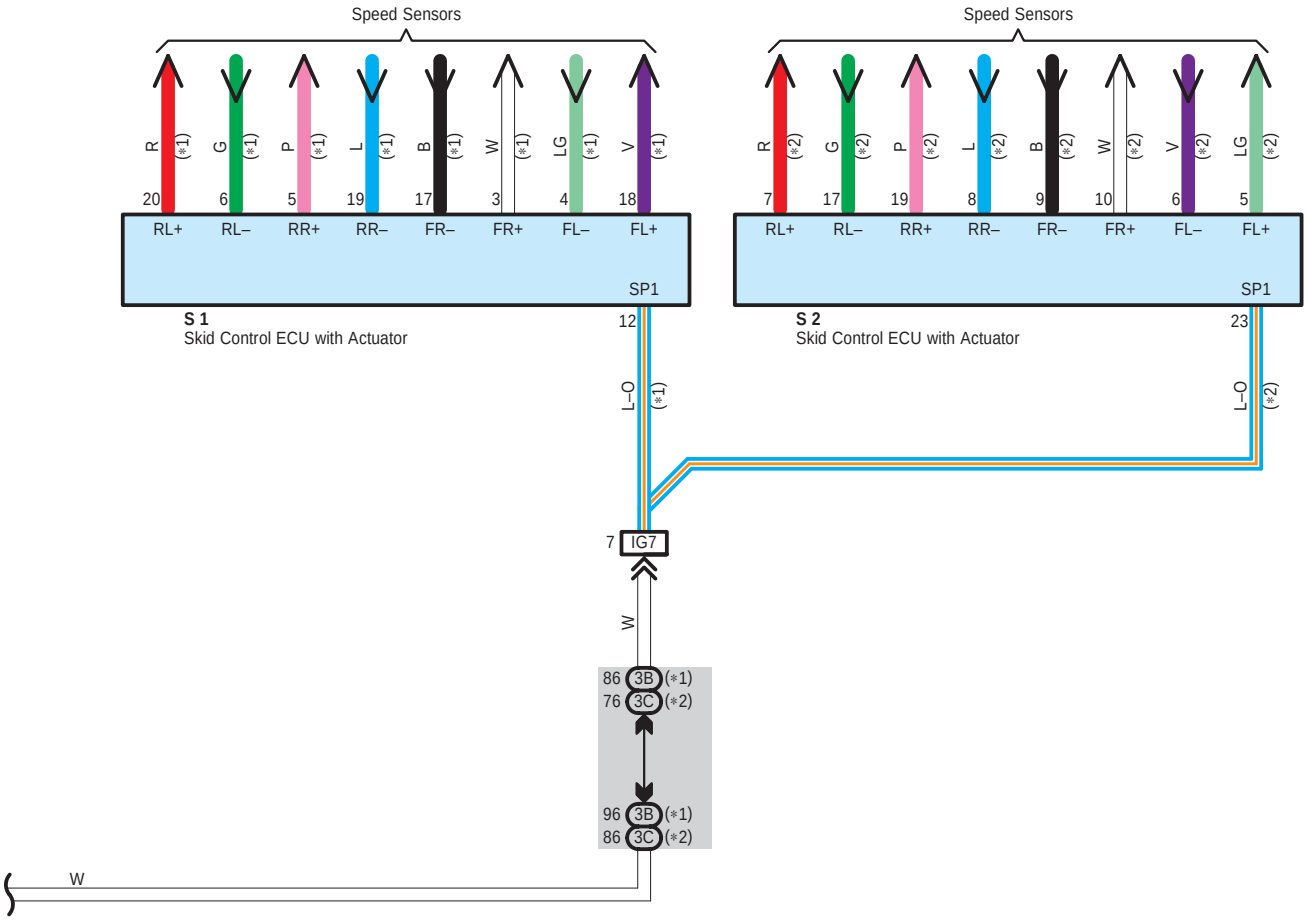

Convertible Roof and Power Window

System Outline

1. Power Window Manual Down or Up Operation

When the power window control SW (Driver side) is pushed one step, the motor rotates and the driver's side window is opened while the switch is being pushed.
When the power window control SW (Driver side) is pulled up one step, the motor rotates and the driver's side window is closed while the switch is being pulled up.
The passenger side window can be opened/closed similarly, by operating the respective power window control SW.
The right and left quarter windows can be opened/closed by operating the power window SW (All window) at the same time.

2. Power Window Auto Down Operation

When the power window control SW (Driver side) is pushed down two steps, the motor rotates and the driver side window is opened fully.

3. Key Off Power Window Operation

The power window can be operated for a few seconds even after the ignition switch has been turned off. However, if any door is opened, the power window operation will be canceled.

4. Convertible Roof Open or Close Operation

When the sliding roof control SW is pushed to the OPEN side, the motor rotates and the convertible roof and all the windows are opened.
When the sliding roof control SW is pushed to the CLOSE side, the motor rotates in the opposite direction from open, and the convertible roof is closed and side windows go partially down and quarter windows go completely down.

: Parts Location

Code		See Page	Code		See Page	Code	See Page
B8	C	46 (*1)	D8		50 (*1)	P9	51 (*1)
C7		46 (*1)	J3		47 (*1)	P19	47 (*1)
C17	B	50 (*1)	J12	B	47 (*1)	Q1	51 (*1)
C18	A	50 (*1)	J15		50 (*1)	Q2	51 (*1)
C19	C	50 (*1)	J16	A	50 (*1)	S1	41 (3MZ–FE)
C21		50 (*1)	J17	B	50 (*1)	S2	41 (3MZ–FE)
C22		50 (*1)	P7		51 (*1)	S17	47 (*1)
D5		50 (*1)	P8		51 (*1)		

: Relay Blocks

Code	See Page	Relay Blocks (Relay Block Location)
1	24	Engine Room R/B (Engine Compartment Left)

: Junction Block and Wire Harness Connector

Code	See Page	Junction Block and Wire Harness (Connector Location)
1E	27	Engine Room Main Wire and Engine Room J/B (Engine Compartment Left)
2A	30	Engine Room Main Wire and Driver Side J/B (Lower Finish Panel)
2F	30	Instrument Panel Wire and Driver Side J/B (Lower Finish Panel)
2G	31	
2H		
2J	30	
2K		
2M		
2O	30	Floor Wire and Driver Side J/B (Lower Finish Panel)
3A	36 (*2)	Instrument Panel Wire and Passenger Side J/B (Instrument Panel Brace RH)
	37 (*3)	
3B	36 (*2)	
3C	37 (*3)	

* 1 : Convertible * 2 : C/P, Convertible w/ VSC * 3 : Convertible w/o VSC

: Connector Joining Wire Harness and Wire Harness

Code	See Page	Joining Wire Harness and Wire Harness (Connector Location)
IA1	58 (*1)	Front Door LH Wire and Instrument Panel Wire (Left Kick Panel)
IA2		
IC1	58 (*1)	Instrument Panel Wire and Floor No.1 Wire (Left Kick Panel)
IC2		
ID1	58 (*1)	Engine Room Main Wire and Floor No.1 Wire (Left Side of Driver Side J/B)
IG7	58 (*1)	Engine Room Main Wire and Instrument Panel Wire (Behind the Radio and Player)
IN1	59 (*1)	Front Door RH Wire and Instrument Panel Wire (Right Kick Panel)
IN2		
IR2	59 (*1)	Instrument Panel Wire and Floor No.2 Wire (Right Kick Panel)

: Ground Points

Code	See Page	Ground Points Location
II	58 (*1)	Cowl Side Panel LH
IJ	58 (*1)	Instrument Panel Brace LH
BV	61 (*1)	Front Side of Rear Quarter Panel LH

* 1 : Convertible * 2 : C/P, Convertible w/ VSC * 3 : Convertible w/o VSC

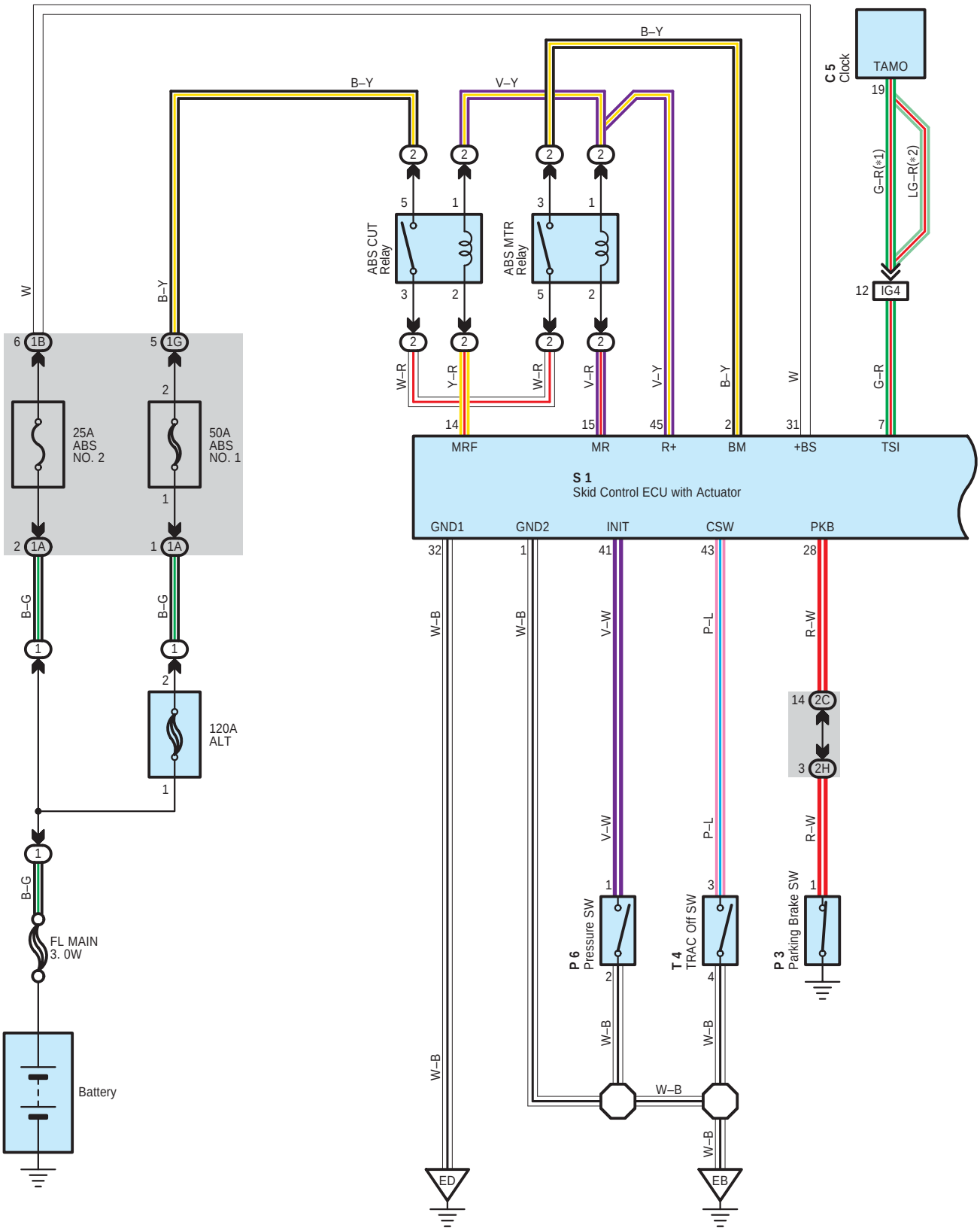
B–Y
V–Y
B–Y
C 5
Clock
TAMO
19
G–R(*1)
LG–R(*2)
12
IG4
G–R
7
TSI
ABS CUT
Relay
ABS MTR
Relay
W–R
Y–R
W–R
V–R
V–Y
B–Y
W
14
MRF
15
MR
45
R+
2
BM
31
+BS
S 1
Skid Control ECU with Actuator
GND1
GND2
INIT
CSW
PKB
32
1
41
43
28
W–B
W–B
V–W
P–L
R–W
14
2C
3
2H
W
B–Y
6
1B
5
1G
25A
ABS
NO. 2
50A
ABS
NO. 1
2
1A
1
1A
B–G
B–G
120A
ALT
B–G
FL MAIN
3. 0W
Battery
P 6
Pressure SW
T 4
TRAC Off SW
P 3
Parking Brake SW
W–B
W–B
W–B
W–B
W–B
ED
EB

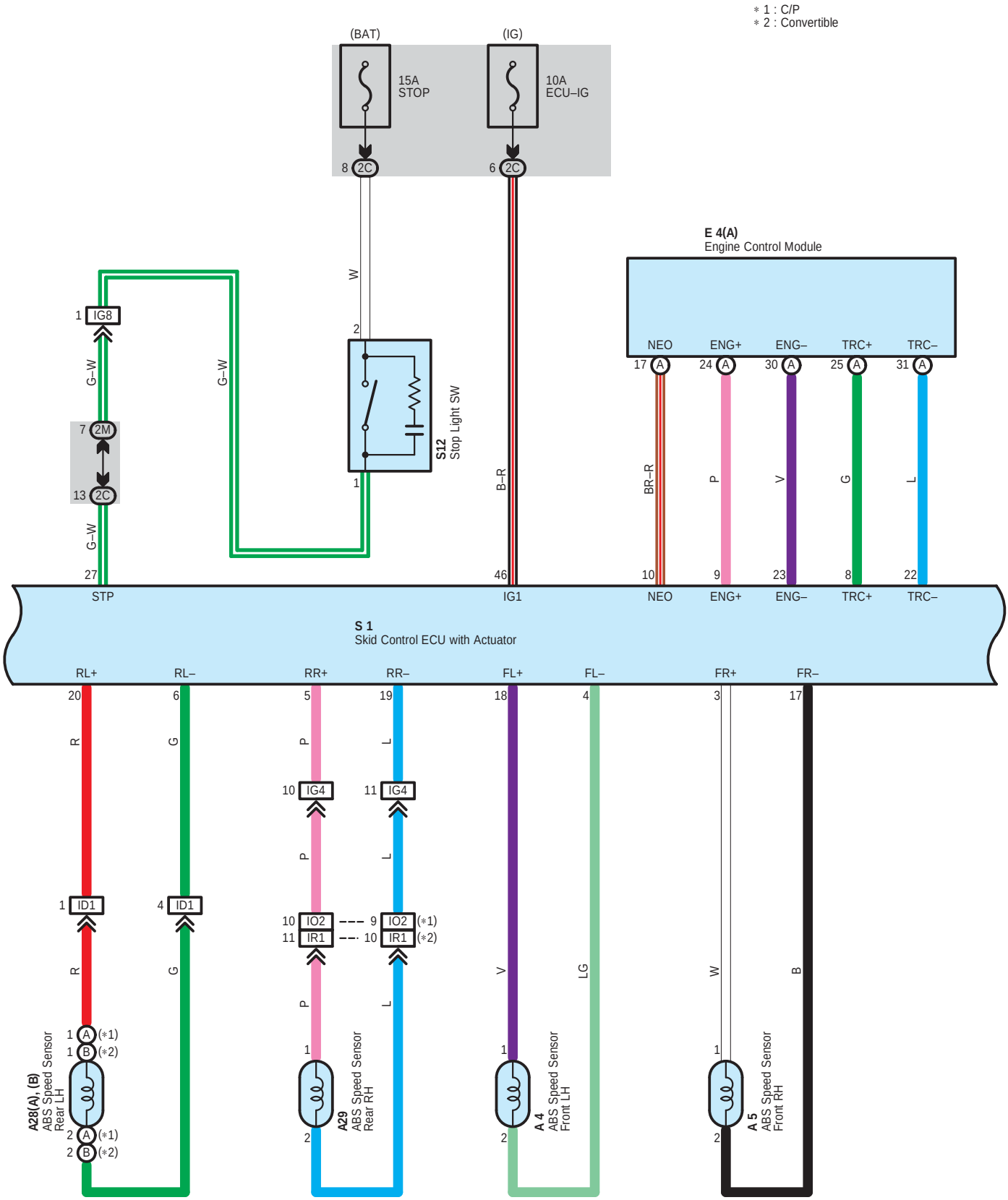
* 1 : C/P
* 2 : Convertible
(BAT)
(IG)
15A
STOP
10A
ECU–IG
8 2C
6 2C
E 4(A)
Engine Control Module
NEO
ENG+
ENG–
TRC+
TRC–
17 A
24 A
30 A
25 A
31 A
1 IG8
7 2M
13 2C
27
W
G–W
G–W
G–W
2
1
S12
Stop Light SW
B–R
46
BR–R
P
V
G
L
10
9
23
8
22
STP
IG1
NEO
ENG+
ENG–
TRC+
TRC–
S 1
Skid Control ECU with Actuator
RL+
RL–
RR+
RR–
FL+
FL–
FR+
FR–
20
6
5
19
18
4
3
17
R
G
P
L
10 IG4
11 IG4
1 ID1
4 ID1
10 IO2
11 IR1
9 IO2 (*1)
10 IR1 (*2)
V
LG
W
B
1 A (*1)
1 B (*2)
2 A (*1)
2 B (*2)
A28(A), (B)
ABS Speed Sensor
Rear LH
A29
ABS Speed Sensor
Rear RH
A 4
ABS Speed Sensor
Front LH
A 5
ABS Speed Sensor
Front RH

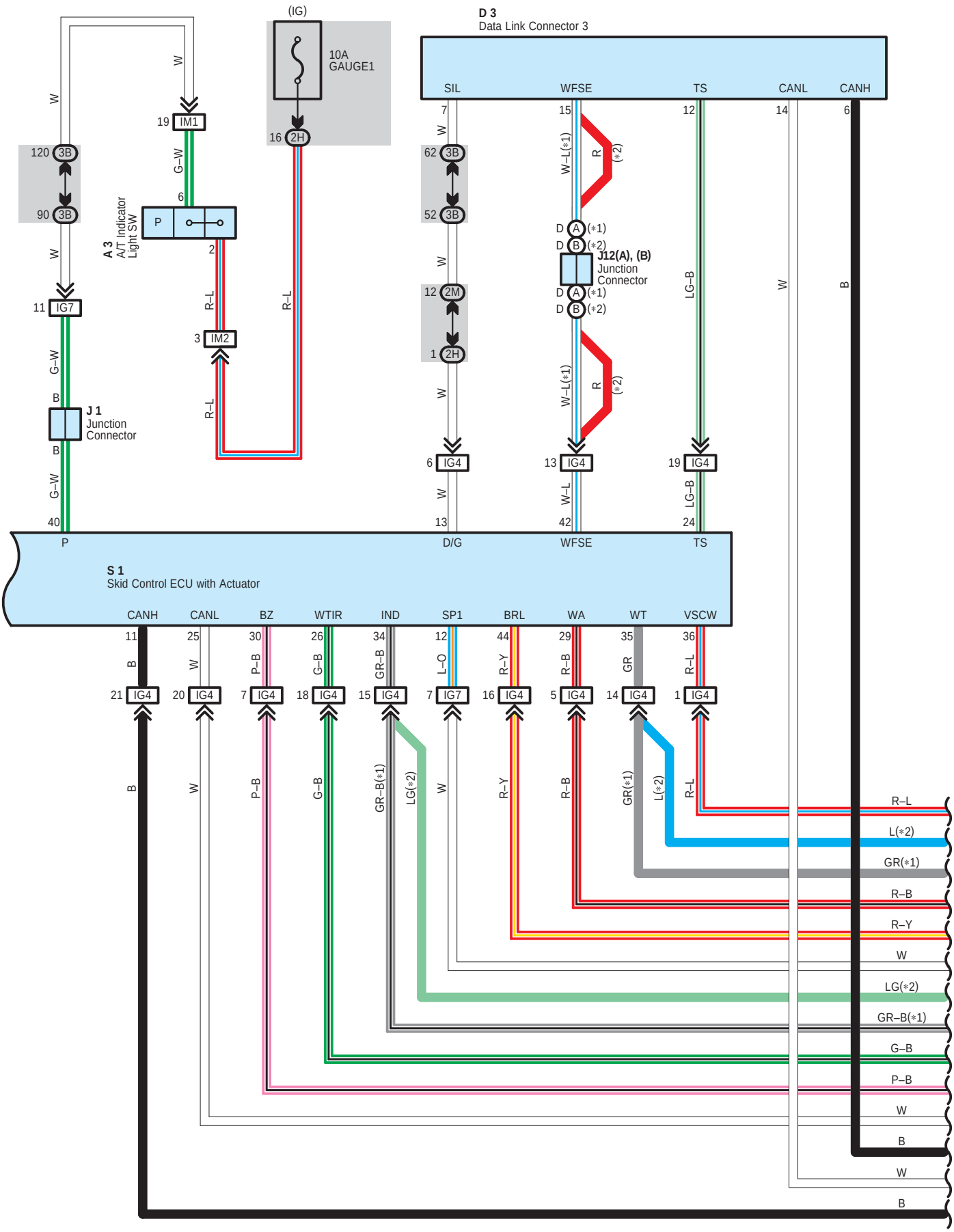
(IG)
10A
GAUGE1
D 3
Data Link Connector 3
SIL
WFSE
TS
CANL
CANH
A 3
A/T Indicator
Light SW
J 1
Junction
Connector
J12(A), (B)
Junction
Connector
S 1
Skid Control ECU with Actuator
CANH
CANL
BZ
WTIR
IND
SP1
BRL
WA
WT
VSCW
D/G
WFSE
TS
R–L
L(*2)
GR(*1)
R–B
R–Y
W
LG(*2)
GR–B(*1)
G–B
P–B
W
B
W
B

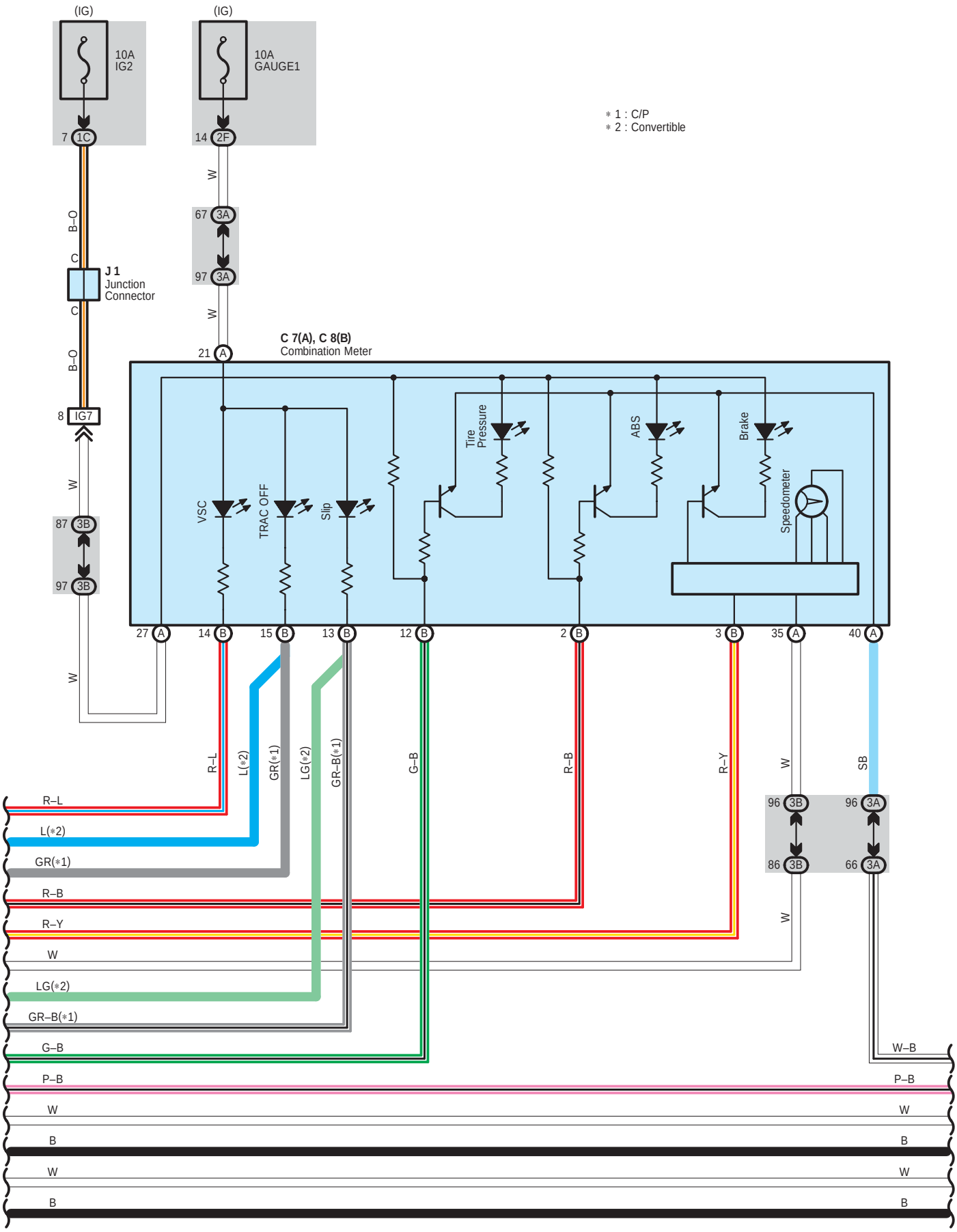
(IG)
10A
IG2
(IG)
10A
GAUGE1
∗1 : C/P
∗2 : Convertible
7 1C
14 2F
W
67 3A
97 3A
B–O
C
J 1
Junction
Connector
C
W
B–O
21 A
C 7(A), C 8(B)
Combination Meter
8 IG7
W
87 3B
97 3B
W
VSC
TRAC OFF
Slip
Tire
Pressure
ABS
Brake
Speedometer
27 A
14 B
15 B
13 B
12 B
2 B
3 B
35 A
40 A
R–L
L(∗2)
GR(∗1)
LG(∗2)
GR–B(∗1)
G–B
R–B
R–Y
W
SB
96 3B
86 3B
96 3A
66 3A
W
R–L
L(∗2)
GR(∗1)
R–B
R–Y
W
LG(∗2)
GR–B(∗1)
G–B
W–B
P–B
P–B
W
W
B
B
W
W
B
B

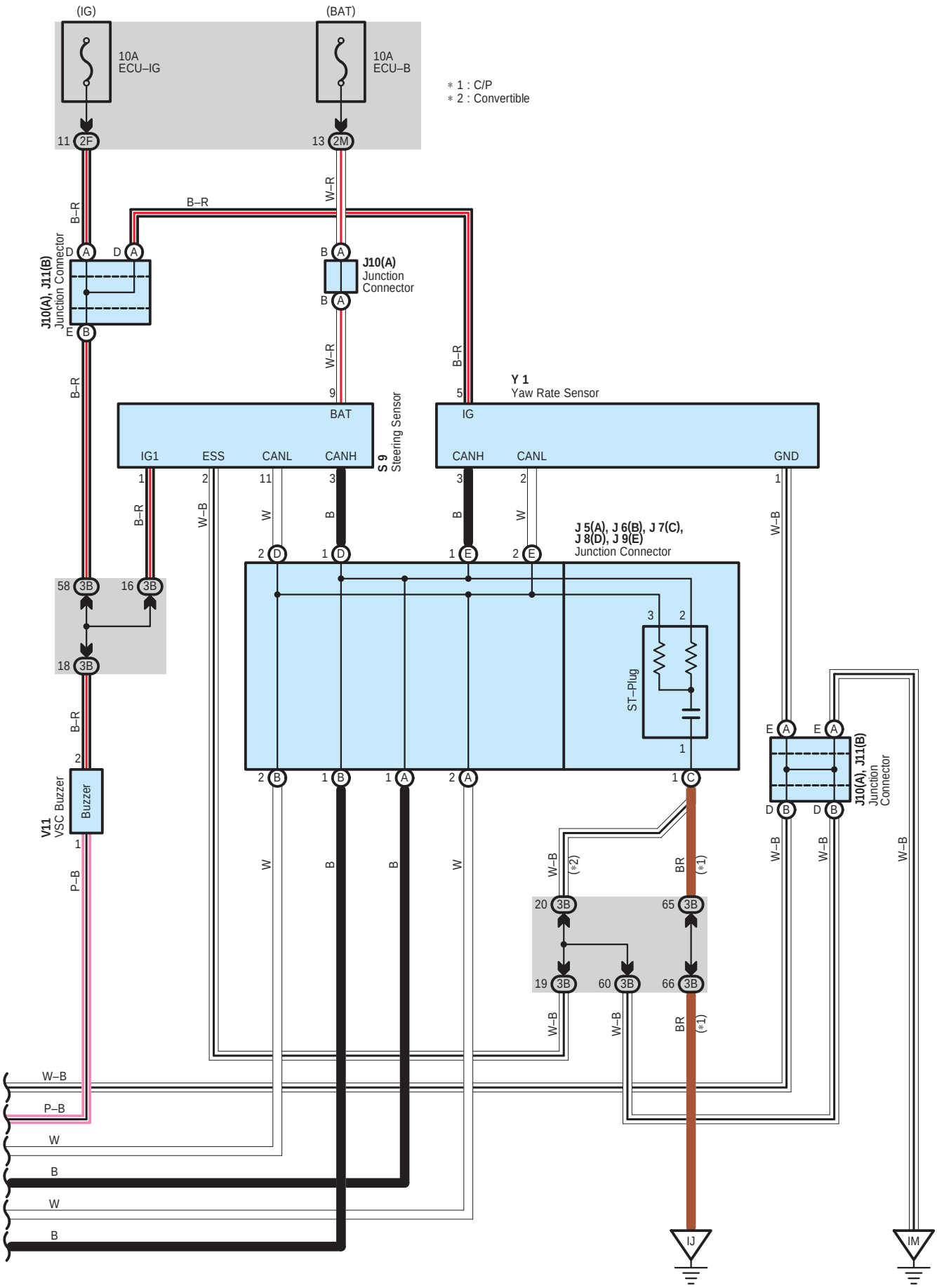
(IG)
(BAT)
10A
ECU–IG
10A
ECU–B
* 1 : C/P
* 2 : Convertible
11 2F
13 2M
B–R
W–R
J10(A), J11(B)
Junction Connector
J10(A)
Junction
Connector
Y 1
Yaw Rate Sensor
S 9
Steering Sensor
BAT
IG
IG1
ESS
CANL
CANH
GND
J 5(A), J 6(B), J 7(C),
J 8(D), J 9(E)
Junction Connector
ST–Plug
58 3B
16 3B
18 3B
V11
VSC Buzzer
Buzzer
P–B
W–B
W
B
BR
(*1)
(*2)
20 3B
65 3B
19 3B
60 3B
66 3B
IJ
IM

System Outline

The vehicle could be in an extreme over steering or under steering tendency due to unexpected accidents, road conditions, vehicle speed, or by other external factors. In such a case, this system automatically controls the engine output and the braking to each wheel, to decrease the extreme over steering and under steering.

∗ To decrease extreme over steering tendency

When the system determines that the over steering tendency is large, the system applies brakes to the outer wheels according to the degree of over steering, and creates a moment towards the outer side of the vehicle, to decrease the tendency of over steering. Also, when the brakes are applied, the vehicle speed decreases while the stability increases.

∗ To decrease extreme under steering tendency

When the system determines that the under steering tendency is large, the system applies brakes to the front or rear wheels according to the degree of under steering, to decrease the tendency of under steering.

∗ TRAC off SW

TRAC off SW is only for two–wheel drive models. Four–wheel drive models is needless this SW.

The SW to send the traction control system into OFF mode. When the SW is pushed after starting the engine, the system will be in OFF mode, and the TRAC OFF indicator light will turn on. When the SW is pushed again, the system will be in standby mode. When the engine is stopped and re–started, regardless of the TRAC off SW, the system will be in standby mode.

Information to the driver

The VSC system informs the driver when the tire grip is about to exceed its grip capacity, by blinking the slip indicator light and emiting an intermittent sound of the buzzer. Accordingly, the driver is informed to drive more gently.

: Parts Location

Code		See Page	Code		See Page	Code		See Page
A3		40 (3MZ–FE)	J1		47 (*1)	J12	B	47 (*1)
A4		40 (3MZ–FE)	J5	A	38, 47 (*1)	P3		45 (C/P)
A5		40 (3MZ–FE)			38, 45 (C/P)			47 (*1)
A28	A	48 (C/P)	J6	B	38, 47 (*1)	P6		45 (C/P)
	B	50 (*1)			38, 45 (C/P)			47 (*1)
A29		48 (C/P)	J7	C	38, 47 (*1)	S1		41 (3MZ–FE)
		50 (*1)			38, 45 (C/P)	S9		45 (C/P)
C5		44 (C/P)	J8	D	38, 47 (*1)			47 (*1)
		46 (*1)			38, 45 (C/P)	S12		45 (C/P)
C7	A	44 (C/P)	J9	E	38, 47 (*1)			47 (*1)
		46 (*1)			38, 45 (C/P)	T4		45 (C/P)
C8	B	44 (C/P)	J10	A	45 (C/P)			47 (*1)
		46 (*1)			47 (*1)	V11		45 (C/P)
D3		44 (C/P)	J11	B	45 (C/P)			47 (*1)
		46 (*1)			47 (*1)	Y1		45 (C/P)
E4		44 (C/P)	J12	A	45 (C/P)			47 (*1)
		46 (*1)			47 (*1)			
J1		45 (C/P)		B	45 (C/P)			

: Relay Blocks

Code	See Page	Relay Blocks (Relay Block Location)
1	24	Engine Room R/B (Engine Compartment Left)
2	25	VSC R/B (Engine Compartment Left)

* 1 : Convertible * 2 : C/P, Convertible w/ VSC * 3 : Convertible w/o VSC

: Junction Block and Wire Harness Connector

Code	See Page	Junction Block and Wire Harness (Connector Location)
1A	27	Engine Room Main Wire and Engine Room J/B (Engine Compartment Left)
1B		
1C		
1G		
2C	30	Engine Room Main Wire and Driver Side J/B (Lower Finish Panel)
2F	30	Instrument Panel Wire and Driver Side J/B (Lower Finish Panel)
2H	31	
2M	30	
3A	36 (*2)	Instrument Panel Wire and Passenger Side J/B (Instrument Panel Brace RH)
3B		

: Connector Joining Wire Harness and Wire Harness

Code	See Page	Joining Wire Harness and Wire Harness (Connector Location)
ID1	56 (C/P)	Engine Room Main Wire and Floor No.1 Wire (Left Side of Driver Side J/B)
	58 (*1)	
IG4	56 (C/P)	Engine Room Main Wire and Instrument Panel Wire (Behind the Radio and Player)
	58 (*1)	
IG7	56 (C/P)	
	58 (*1)	
IG8	56 (C/P)	
	58 (*1)	
IM1	57 (C/P)	Engine Wire and Instrument Panel Wire (Behind the Glove Box)
	59 (*1)	
IM2	57 (C/P)	
	59 (*1)	
IO2	57 (C/P)	Instrument Panel Wire and Floor No.2 Wire (Right Kick Panel)
IR1	59 (*1)	

: Ground Points

Code	See Page	Ground Points Location
EB	54 (3MZ–FE)	Right Fender
ED	54 (3MZ–FE)	Left Fender
IJ	56 (C/P)	Instrument Panel Brace LH
	58 (*1)	
IM	56 (C/P)	Instrument Panel Reinforcement RH
	58 (*1)	

* 1 : Convertible * 2 : C/P, Convertible w/ VSC * 3 : Convertible w/o VSC

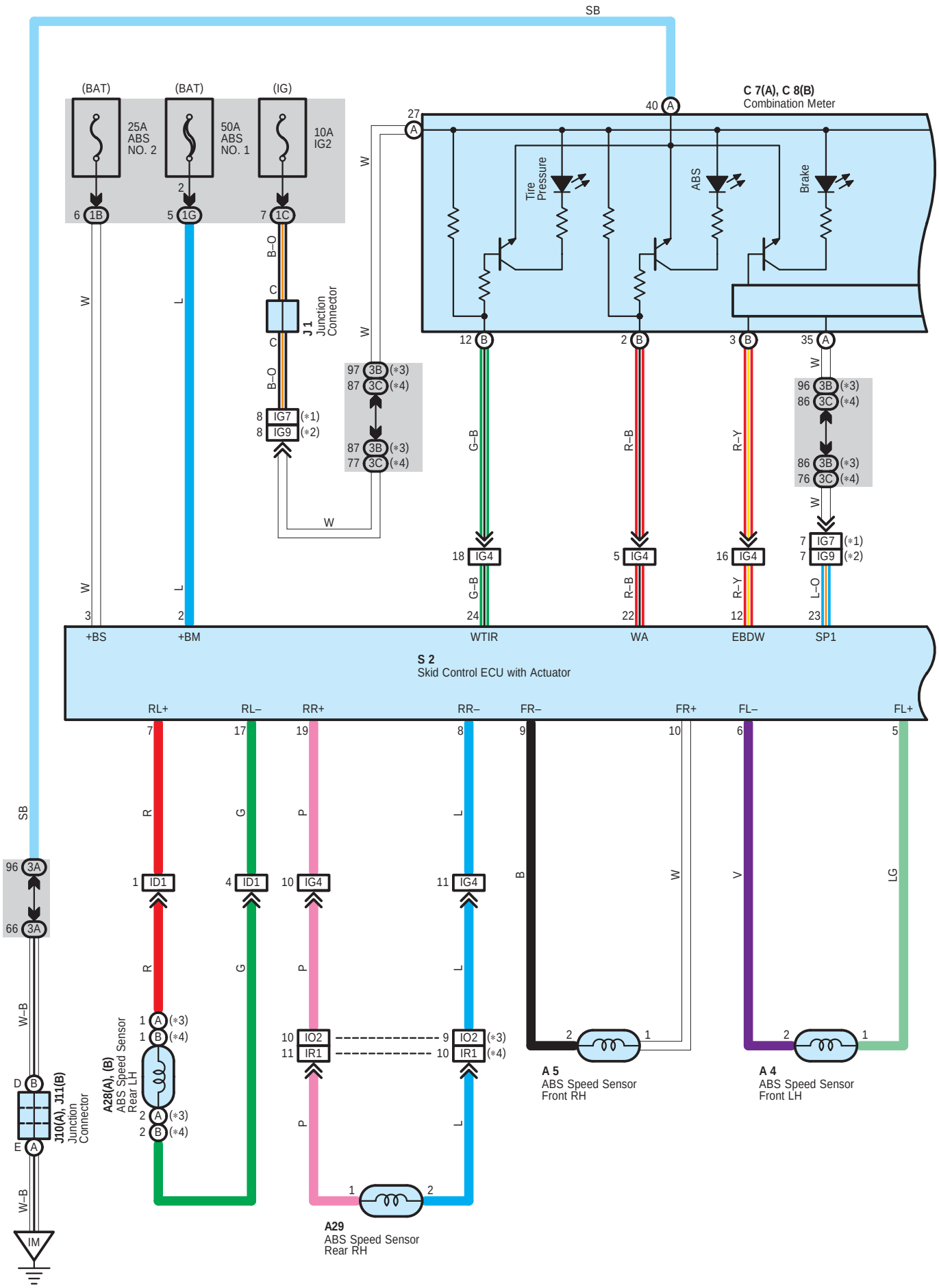
SB
(BAT)
(BAT)
(IG)
25A ABS NO. 2
50A ABS NO. 1
10A IG2
6 1B
5 1G
7 1C
C 7(A), C 8(B)
Combination Meter
40 A
27 A
Tire Pressure
ABS
Brake
J1 Junction Connector
8 IG7 (*1)
8 IG9 (*2)
97 3B (*3)
87 3C (*4)
87 3B (*3)
77 3C (*4)
12 B
2 B
3 B
35 A
96 3B (*3)
86 3C (*4)
86 3B (*3)
76 3C (*4)
18 IG4
5 IG4
16 IG4
7 IG7 (*1)
7 IG9 (*2)
3
2
24
22
12
23
+BS
+BM
WTIR
WA
EBDW
SP1
S 2
Skid Control ECU with Actuator
RL+
RL–
RR+
RR–
FR–
FR+
FL–
FL+
7
17
19
8
9
10
6
5
96 3A
66 3A
1 ID1
4 ID1
10 IG4
11 IG4
1 A (*3)
1 B (*4)
2 A (*3)
2 B (*4)
A28(A), (B) ABS Speed Sensor Rear LH
10 IO2
11 IR1
9 IO2 (*3)
10 IR1 (*4)
A 5
ABS Speed Sensor Front RH
A 4
ABS Speed Sensor Front LH
A29
ABS Speed Sensor Rear RH
D B
E A
J10(A), J11(B) Junction Connector
IM

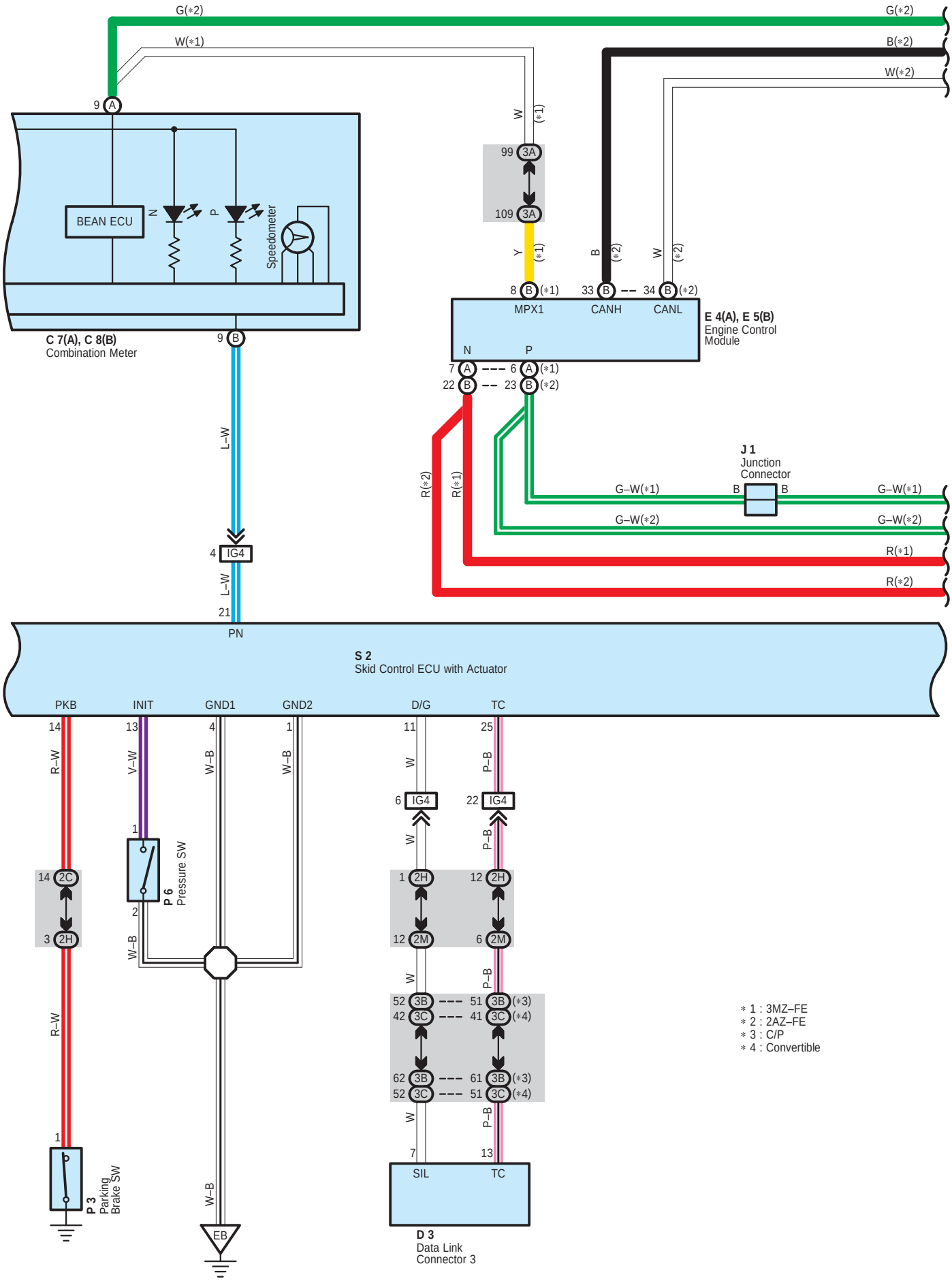
G(*2)
W(*1)
G(*2)
B(*2)
W(*2)
9 A
BEAN ECU
N
P
Speedometer
C 7(A), C 8(B)
Combination Meter
9 B
W
(*1)
99 3A
109 3A
Y
(*1)
B
(*2)
W
(*2)
8 B (*1)
33 B
34 B (*2)
MPX1
CANH
CANL
E 4(A), E 5(B)
Engine Control
Module
N
P
7 A
6 A (*1)
22 B
23 B (*2)
L–W
R(*2)
R(*1)
J 1
Junction
Connector
G–W(*1)
B
B
G–W(*1)
G–W(*2)
G–W(*2)
R(*1)
R(*2)
4 IG4
L–W
21
PN
S 2
Skid Control ECU with Actuator
PKB
INIT
GND1
GND2
D/G
TC
14
13
4
1
11
25
R–W
V–W
W–B
W–B
W
P–B
6 IG4
22 IG4
1
P 6
Pressure SW
2
W–B
W
P–B
14 2C
3 2H
1 2H
12 2H
12 2M
6 2M
W
P–B
52 3B
42 3C
51 3B (*3)
41 3C (*4)
62 3B
52 3C
61 3B (*3)
51 3C (*4)
R–W
W
P–B
1
7
13
SIL
TC
P 3
Parking
Brake SW
W–B
EB
D 3
Data Link
Connector 3
* 1 : 3MZ–FE
* 2 : 2AZ–FE
* 3 : C/P
* 4 : Convertible

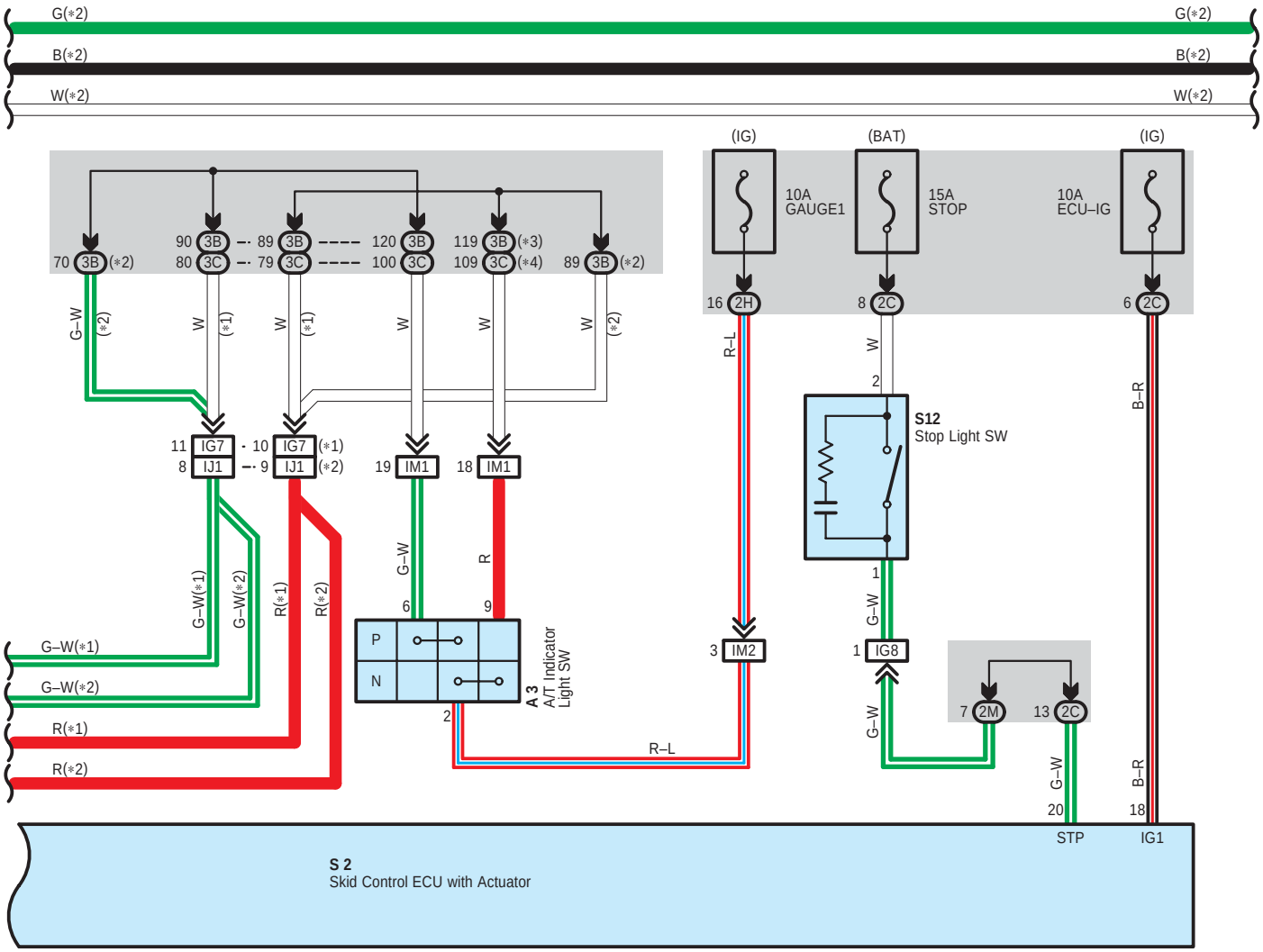
G(*2)
B(*2)
W(*2)
(IG)
(BAT)
(IG)
10A
GAUGE1
15A
STOP
10A
ECU–IG
70 3B (*2)
90 3B
80 3C
89 3B
79 3C
120 3B
100 3C
119 3B (*3)
109 3C (*4)
89 3B (*2)
16 2H
8 2C
6 2C
G–W
W
R–L
B–R
11 IG7
8 IJ1
10 IG7 (*1)
9 IJ1 (*2)
19 IM1
18 IM1
S12
Stop Light SW
G–W(*1)
G–W(*2)
R(*1)
R(*2)
R
6
9
P
N
2
A 3
A/T Indicator
Light SW
3 IM2
1 IG8
7 2M
13 2C
20
18
STP
IG1
S 2
Skid Control ECU with Actuator

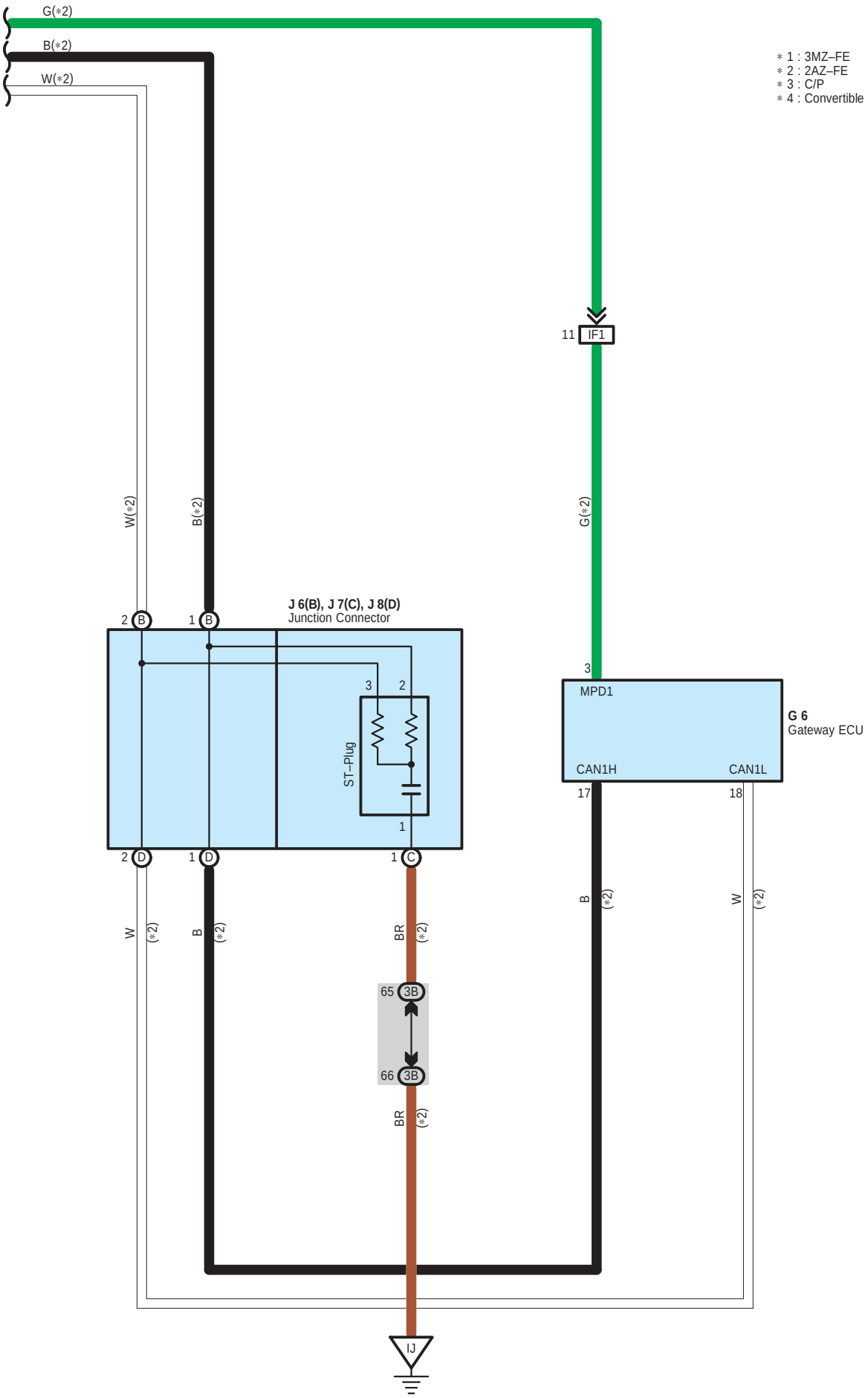
G(*2)
B(*2)
W(*2)
* 1 : 3MZ–FE
* 2 : 2AZ–FE
* 3 : C/P
* 4 : Convertible
11 IF1
W(*2)
B(*2)
G(*2)
J 6(B), J 7(C), J 8(D)
Junction Connector
2 B
1 B
3
2
ST–Plug
1
2 D
1 D
1 C
3
MPD1
G 6
Gateway ECU
CAN1H
CAN1L
17
18
W
(*2)
B
(*2)
BR
(*2)
B
(*2)
W
(*2)
65 3B
66 3B
BR
(*2)
IJ

System Outline

This system controls the respective brake fluid pressures acting on the disc brake cylinders of the right front wheel, left front wheel and rear wheels when the brakes are applied in a panic stop so that the wheels do not lock. This results in improved directional stability and steerability during panic braking.

1. Input Signals

(1) Speed sensor signal

The speed of the wheels is detected and input to TERMINALS 5, 7, 10 and 19 of the skid control ECU with actuator.

(2) Stop light SW signal

A signal is input to TERMINAL 20 of the skid control ECU with actuator when the brake pedal is depressed.

2. System Operation

During sudden braking the skid control ECU with actuator has signals input from each sensor, which controls the current to the solenoid inside the actuator and lets the hydraulic pressure acting on each wheel cylinder escape to the reservoir. The pump inside the actuator is also operating at this time and it returns the brake fluid from the reservoir to the master cylinder, thus preventing locking of the vehicle wheels.

If the skid control ECU with actuator judges that the hydraulic pressure acting on the wheel cylinder is insufficient, the current on the solenoid is controlled and the hydraulic pressure is increased. Holding of the hydraulic pressure is also controlled by the skid control ECU with actuator, by the same method as above. Pressure reduction, holding and increase are repeated to maintain vehicle stability and to improve steerability during sudden braking.

: Parts Location

Code		See Page	Code		See Page	Code		See Page
A3		40 (3MZ–FE)	C8	B	46 (*1)	J10	A	45 (C/P)
		42 (2AZ–FE)	D3		44 (C/P)			47 (*1)
A4		40 (3MZ–FE)			46 (*1)	J11	B	45 (C/P)
		42 (2AZ–FE)	E4	A	44 (C/P)			47 (*1)
A5		40 (3MZ–FE)			46 (*1)	P3		45 (C/P)
		42 (2AZ–FE)	E5	B	44 (C/P)			47 (*1)
A28	A	48 (C/P)			46 (*1)	P6		45 (C/P)
	B	50 (*1)	G6		44 (C/P)			47 (*1)
A29		48 (C/P)	J1		45 (C/P)	S2		41 (3MZ–FE)
		50 (*1)			47 (*1)			43 (2AZ–FE)
C7	A	44 (C/P)	J6	B	38, 45 (C/P)	S12		45 (C/P)
		46 (*1)	J7	C	38, 45 (C/P)			47 (*1)
C8	B	44 (C/P)	J8	D	38, 45 (C/P)			

: Junction Block and Wire Harness Connector

Code	See Page	Junction Block and Wire Harness (Connector Location)
1B	27	Engine Room Main Wire and Engine Room J/B (Engine Compartment Left)
1C		
1G		
2C	30	Engine Room Main Wire and Driver Side J/B (Lower Finish Panel)
2H	31	Instrument Panel Wire and Driver Side J/B (Lower Finish Panel)
2M	30	
3A	36 (*2)	Instrument Panel Wire and Passenger Side J/B (Instrument Panel Brace RH)
	37 (*3)	
3B	36 (*2)	
3C	37 (*3)	

* 1 : Convertible * 2 : C/P, Convertible w/ VSC * 3 : Convertible w/o VSC

: Connector Joining Wire Harness and Wire Harness

Code	See Page	Joining Wire Harness and Wire Harness (Connector Location)
ID1	56 (C/P)	Engine Room Main Wire and Floor No.1 Wire (Left Side of Driver Side J/B)
	58 (*1)	
IF1	56 (C/P)	Instrument Panel Wire and Instrument Panel Wire (Instrument Panel Brace LH)
	58 (*1)	
IG4	56 (C/P)	Engine Room Main Wire and Instrument Panel Wire (Behind the Radio and Player)
	58 (*1)	
IG7	56 (C/P)	
	58 (*1)	
IG8	56 (C/P)	
	58 (*1)	
IG9	56 (C/P)	
IJ1	57 (C/P)	Instrument Panel Wire and Instrument Panel Wire (Instrument Panel Reinforcement RH)
	59 (*1)	
IM1	57 (C/P)	Engine Wire and Instrument Panel Wire (Behind the Glove Box)
	59 (*1)	
IM2	57 (C/P)	
	59 (*1)	
IO2	57 (C/P)	Instrument Panel Wire and Floor No.2 Wire (Right Kick Panel)
IR1	59 (*1)	

: Ground Points

Code	See Page	Ground Points Location
EB	54 (3MZ–FE)	Right Fender
	55 (2AZ–FE)	
IJ	56 (C/P)	Instrument Panel Brace LH
IM	56 (C/P)	Instrument Panel Reinforcement RH
	58 (*1)	

* 1 : Convertible * 2 : C/P, Convertible w/ VSC * 3 : Convertible w/o VSC

NOTICE: When inspecting or repairing the SRS, perform service in accordance with the following precautionary instructions and the procedure, and precautions in the Repair Manual applicable for the model year.

- Malfunction symptoms of the SRS are difficult to confirm, so the DTCs become the most important source of information when troubleshooting. When troubleshooting the SRS, always inspect the DTCs before disconnecting the battery.
- **Work must be started more than 90 seconds after the ignition SW is turned to the ”LOCK” position and the negative (–) terminal cable is disconnected from the battery.**
  (The SRS is equipped with a back–up power source so that if work is started within 90 seconds from disconnecting the negative (–) terminal cable of the battery, the SRS may deploy.)
- When the negative (–) terminal cable is disconnected from the battery, the memory of the clock and audio system will be cleared. So before starting work, make a record of the contents in the audio memory system. When work is finished, reset the audio systems as they were before and adjust the clock. Some vehicles have power tilt steering, power telescopic steering, power seat and power outside rear view mirror which are all equipped with memory function. However, it is not possible to make a record of these memory contents. So when the work is finished, it will be necessary to explain it to your customer, and ask the customer to adjust the features and reset the memory. To avoid erasing the memory in each system, never use a back–up power supply from outside the vehicle.
- Before repair, remove the airbag sensor if shocks are likely to be applied to the sensor during repair.
- Do not expose the following parts directly to hot air or flame;
- Even in cases of a minor collision where the SRS does not deploy, the following parts should be inspected;
- Never use SRS parts from another vehicle. When replacing parts, replace with new parts.
- For the purpose of reuse, never disassemble and repair the following parts.
- If the following parts have been dropped, or have cracks, dents and other defects in their case, bracket, and connector, replace with new one.
- Use a volt/ohmmeter with high impedance (10 kΩ/V minimum) for troubleshooting electrical circuits of the system.
- Information labels are attached to the periphery of the SRS components. Follow the instructions of the notice.
- After work on the SRS is completed, check the SRS warning light.
- If the vehicle is equipped with a mobile communication system, refer to the precaution in the IN section of the Repair Manual.

* Steering wheel pad
* Front passenger airbag assembly
* Side airbag assembly
* Curtain shield airbag assembly
* Seat belt pretensioner
* Center airbag sensor assembly
* Front airbag sensor assembly
* Door side airbag sensor assembly
* Side airbag sensor assembly

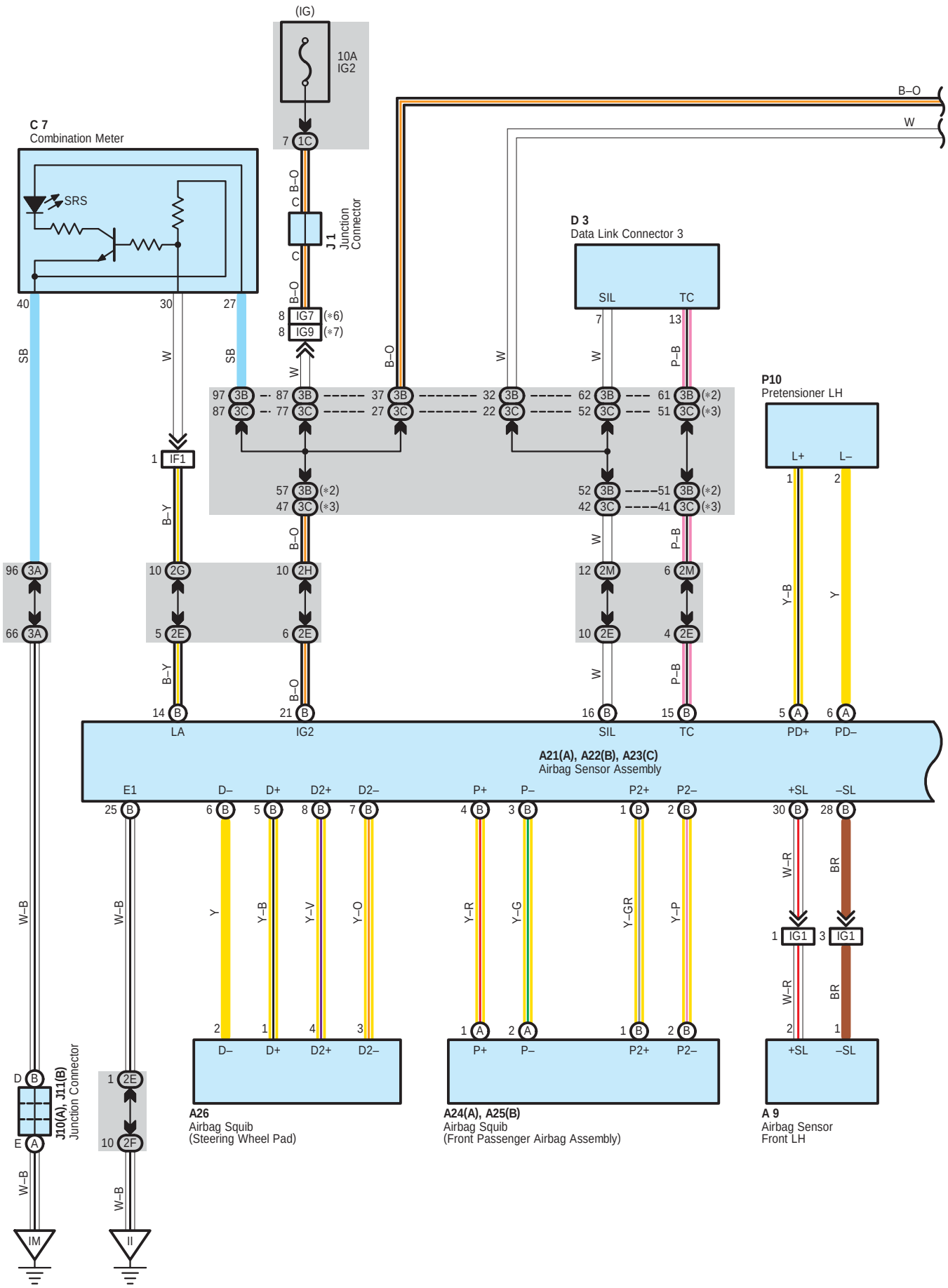
(IG)
10A
IG2
7 1C
B–O
C
J 1
Junction
Connector
C
B–O
8 IG7 (*6)
8 IG9 (*7)
C 7
Combination Meter
SRS
40
30
27
SB
W
SB
W
B–O
W
B–O
W
D 3
Data Link Connector 3
SIL
TC
7
13
W
P–B
P10
Pretensioner LH
L+
L–
1
2
97 3B
87 3C
87 3B
77 3C
37 3B
27 3C
32 3B
22 3C
62 3B
52 3C
61 3B (*2)
51 3C (*3)
1 IF1
57 3B (*2)
47 3C (*3)
52 3B
42 3C
51 3B (*2)
41 3C (*3)
B–Y
B–O
W
P–B
96 3A
66 3A
10 2G
5 2E
10 2H
6 2E
12 2M
10 2E
6 2M
4 2E
Y–B
Y
B–Y
B–O
W
P–B
14 B
LA
21 B
IG2
16 B
SIL
15 B
TC
5 A
PD+
6 A
PD–
A21(A), A22(B), A23(C)
Airbag Sensor Assembly
E1
D–
D+
D2+
D2–
P+
P–
P2+
P2–
+SL
–SL
25 B
6 B
5 B
8 B
7 B
4 B
3 B
1 B
2 B
30 B
28 B
W–B
W–B
Y
Y–B
Y–V
Y–O
Y–R
Y–G
Y–GR
Y–P
W–R
BR
1 IG1
3 IG1
W–R
BR
2
1
4
3
1 A
2 A
1 B
2 B
2
1
D–
D+
D2+
D2–
P+
P–
P2+
P2–
+SL
–SL
D B
E A
J10(A), J11(B)
Junction Connector
1 2E
10 2F
W–B
W–B
IM
A26
Airbag Squib
(Steering Wheel Pad)
A24(A), A25(B)
Airbag Squib
(Front Passenger Airbag Assembly)
A 9
Airbag Sensor
Front LH

∗ 1 : w/ Curtain Shielded Airbag
∗ 2 : C/P, Convertible w/o VSC
∗ 3 : Convertible w/o VSC
∗ 4 : C/P
∗ 5 : Convertible
∗ 6 : 3MZ–FE
∗ 7 : 2AZ–FE

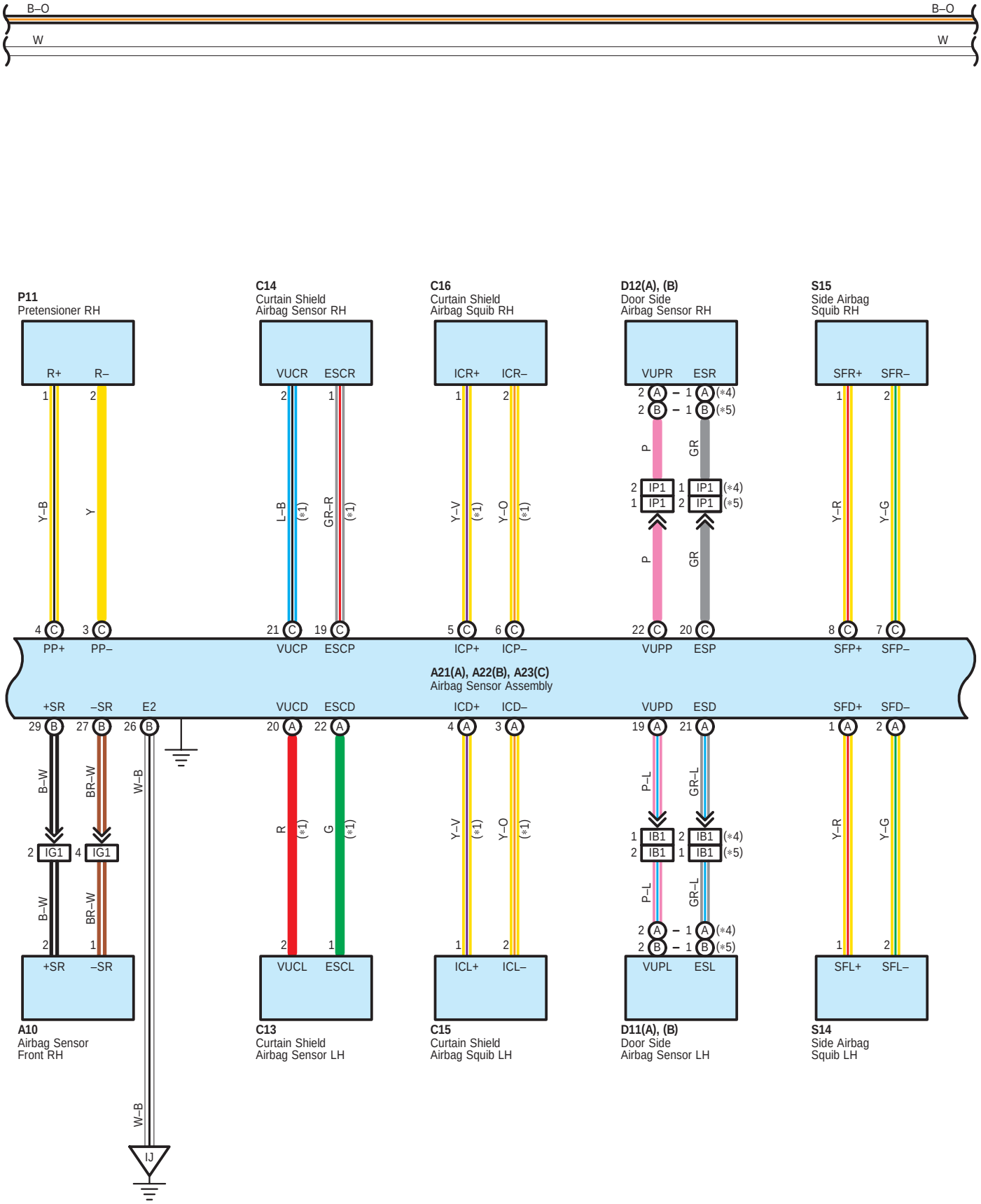

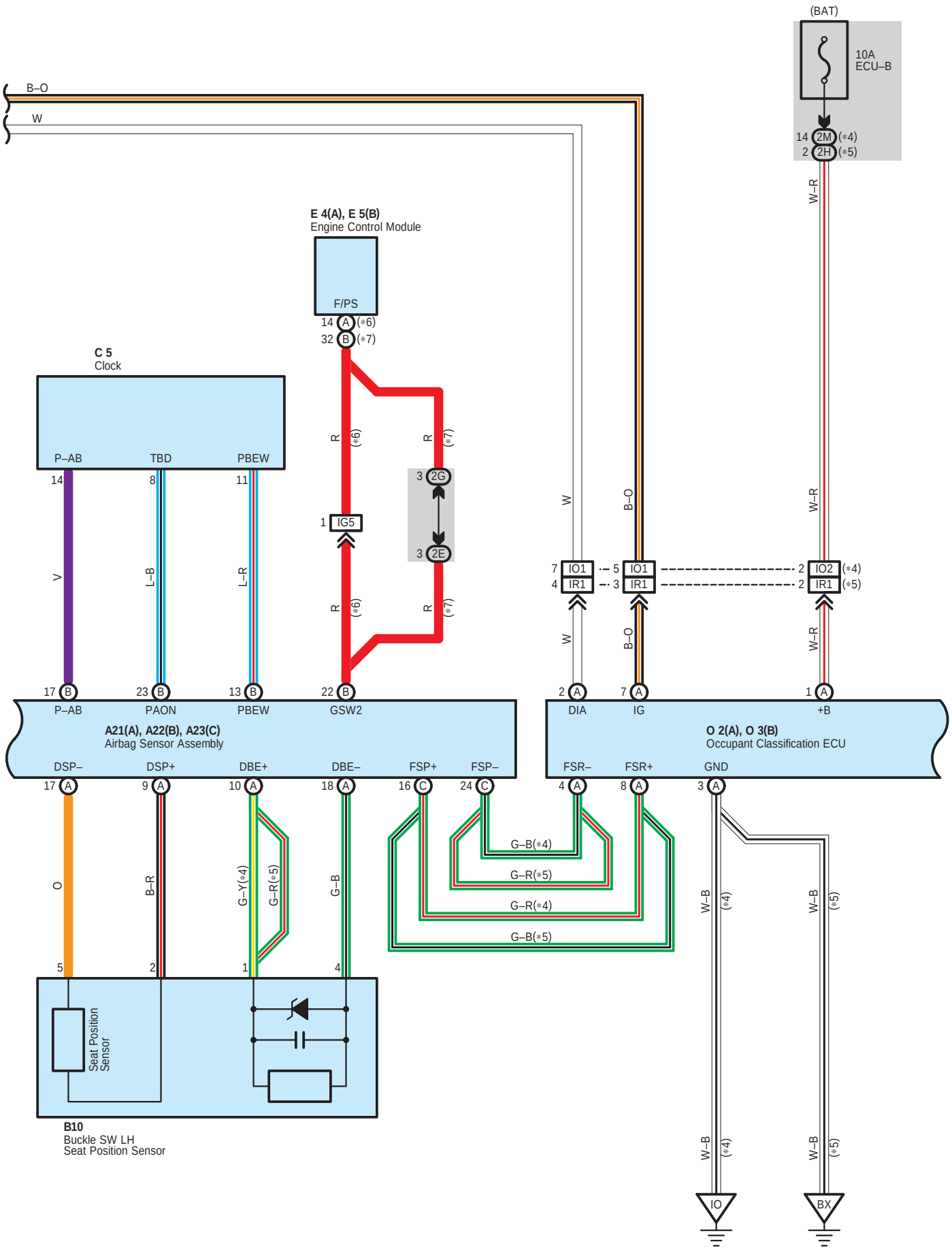
(BAT)
10A
ECU–B
14 2M (*4)
2 2H (*5)
W–R
B–O
W
E 4(A), E 5(B)
Engine Control Module
F/PS
14 A (*6)
32 B (*7)
C 5
Clock
P–AB
TBD
PBEW
14
8
11
V
L–B
L–R
R (*6)
R (*7)
3 2G
3 2E
1 IG5
7 IO1
4 IR1
5 IO1
3 IR1
2 IO2 (*4)
2 IR1 (*5)
17 B
23 B
13 B
22 B
P–AB
PAON
PBEW
GSW2
2 A
7 A
1 A
DIA
IG
+B
A21(A), A22(B), A23(C)
Airbag Sensor Assembly
O 2(A), O 3(B)
Occupant Classification ECU
DSP–
DSP+
DBE+
DBE–
FSP+
FSP–
FSR–
FSR+
GND
17 A
9 A
10 A
18 A
16 C
24 C
4 A
8 A
3 A
G–B(*4)
G–R(*5)
G–R(*4)
G–B(*5)
O
B–R
G–Y(*4)
G–R(*5)
G–B
W–B (*4)
W–B (*5)
5
2
1
4
Seat Position Sensor
B10
Buckle SW LH
Seat Position Sensor
IO
BX

＊4 : C/P
＊5 : Convertible
＊6 : 3MZ–FE
＊7 : 2AZ–FE

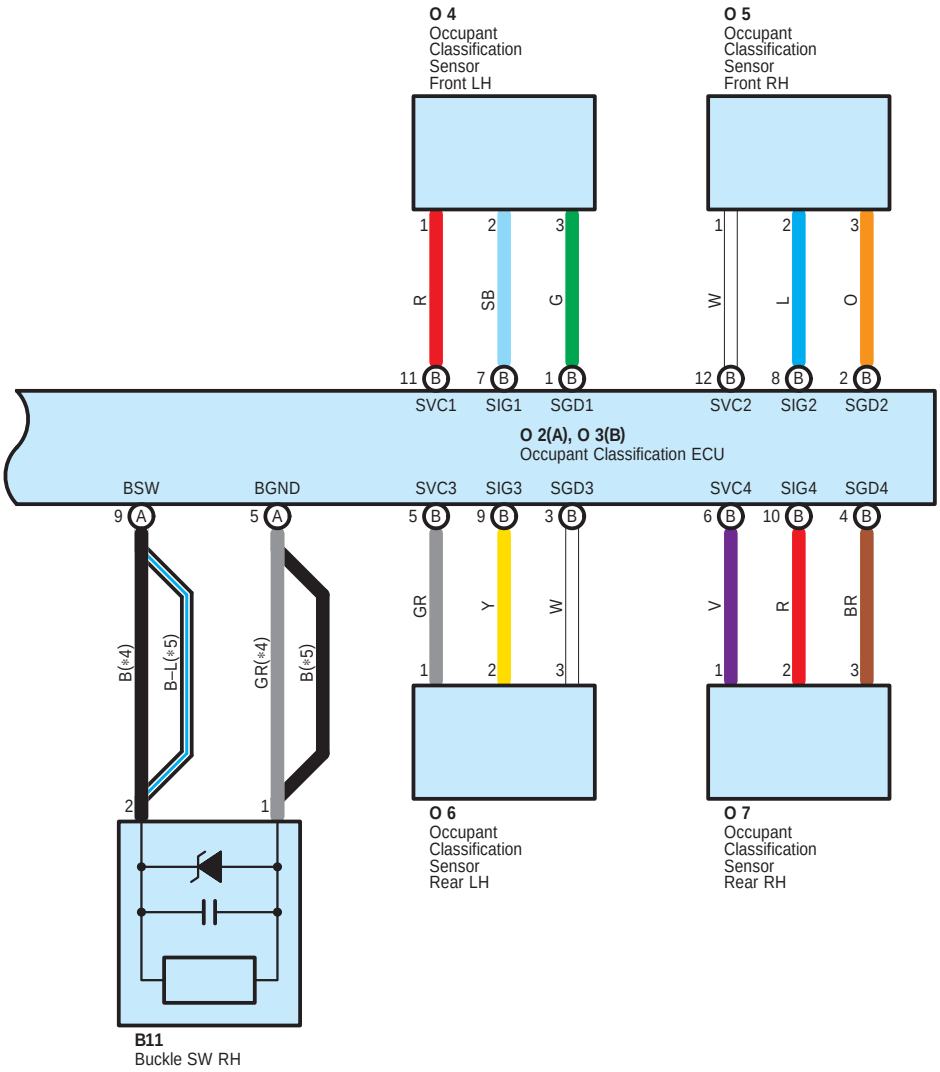

System Outline

The SRS is a driver and front passenger protection device which has a supplemental role to the seat belts.
When the ignition SW is turned to ON, the current from the IG2 fuse flows to TERMINAL (B) 21 of the airbag sensor assembly.
If an accident occurs while driving, when the frontal impact exceeds a set level, the current from the IG2 fuse flows to TERMINALS (B) 5, (B) 8, (B) 4, (B) 1, (A) 5 and (C) 4 of the airbag sensor assembly to the airbag squibs and the pretensioners to TERMINALS (B) 6, (B) 7, (B) 3, (B) 2, (A) 6 and (C) 3 of the airbag sensor assembly to TERMINAL (B) 25, (B) 26 or BODY GROUND to GROUND, so that current flows to the airbag squibs and the pretensioners and causes them to operate.
When the side impact also exceeds a set level, the current from the IG2 fuse flows to TERMINALS (A) 1, (C) 8, (A) 4 and (C) 5 of the airbag sensor assembly to the side airbag squibs and the curtain shield airbag squibs TERMINALS (A) 2, (C) 7, (A) 3 and (C) 6 of the airbag sensor assembly to TERMINAL (B) 25, (B) 26 or BODY GROUND to GROUND, causing side airbag squibs and curtain shield airbag squibs to operate.
The airbag stored inside the steering wheel pad is instantaneously expanded to soften the shock to the driver.
The airbag stored inside the passenger's instrument panel is instantaneously expanded to soften the shock to the front passenger.
Side airbags are instantaneously expanded to soften the shock of side to the driver and front passenger.
The curtain shield airbag can ease an impact on the head of the front and rear passengers and reduce risks of injury.
The pretensioners make sure of the seat belt restrainability.

: Parts Location

Code		See Page	Code		See Page	Code		See Page
A9		40 (3MZ–FE)	C5		44 (C/P)	J10	A	45 (C/P)
		42 (2AZ–FE)			46 (*1)			47 (*1)
A10		40 (3MZ–FE)	C7		44 (C/P)	J11	B	45 (C/P)
		42 (2AZ–FE)			46 (*1)			47 (*1)
A21	A	44 (C/P)	C13		48 (C/P)	O2	A	52
		46 (*1)	C14		48 (C/P)	O3	B	52
A22	B	44 (C/P)	C15		48 (C/P)	O4		52
		46 (*1)	C16		48 (C/P)	O5		52
A23	C	44 (C/P)	D3		44 (C/P)	O6		52
		46 (*1)			46 (*1)	O7		52
A24	A	44 (C/P)	D11	A	48 (C/P)	P10		49 (C/P)
		46 (*1)		B	50 (*1)			51 (*1)
A25	B	44 (C/P)	D12	A	48 (C/P)	P11		49 (C/P)
		46 (*1)		B	50 (*1)			51 (*1)
A26		44 (C/P)	E4	A	44 (C/P)	S14		49 (C/P)
		46 (*1)			46 (*1)			51 (*1)
B10		48 (C/P)	E5	B	44 (C/P)	S15		49 (C/P)
		50 (*1)			46 (*1)			51 (*1)
B11		48 (C/P)	J1		45 (C/P)			
		50 (*1)			47 (*1)			

: Junction Block and Wire Harness Connector

Code	See Page	Junction Block and Wire Harness (Connector Location)
1C	27	Engine Room Main Wire and Engine Room J/B (Engine Compartment Left)
2E	30	Instrument Panel Wire and Driver Side J/B (Lower Finish Panel)
2F		
2G	31	
2H		
2M	30	
3A	36 (*2)	Instrument Panel Wire and Passenger Side J/B (Instrument Panel Brace RH)
	37 (*3)	
3B	36 (*2)	
3C	37 (*3)	

* 1 : Convertible * 2 : C/P, Convertible w/ VSC * 3 : Convertible w/o VSC

: Connector Joining Wire Harness and Wire Harness

Code	See Page	Joining Wire Harness and Wire Harness (Connector Location)
IB1	56 (C/P)	Front Door LH Wire and Floor No.1 Wire (Left Kick Panel)
	58 (*1)	
IF1	56 (C/P)	Instrument Panel Wire and Instrument Panel Wire (Instrument Panel Brace LH)
	58 (*1)	
IG1	56 (C/P)	Engine Room Main Wire and Instrument Panel Wire (Behind the Radio and Player)
	58 (*1)	
IG5	56 (C/P)	
	58 (*1)	
IG7	56 (C/P)	
	58 (*1)	
IG9	56 (C/P)	
IO1	57 (C/P)	Instrument Panel Wire and Floor No.2 Wire (Right Kick Panel)
IO2		
IP1	57 (C/P)	Front Door RH Wire and Floor No.2 Wire (Right Kick Panel)
	59 (*1)	
IR1	59 (*1)	Instrument Panel Wire and Floor No.2 Wire (Right Kick Panel)

: Ground Points

Code	See Page	Ground Points Location
II	56 (C/P)	Cowl Side Panel LH
	58 (*1)	
IJ	56 (C/P)	Instrument Panel Brace LH
	58 (*1)	
IM	56 (C/P)	Instrument Panel Reinforcement RH
	58 (*1)	
IO	56 (C/P)	Right Kick Panel
BX	61 (*1)	Under the Right Center Piller

* 1 : Convertible * 2 : C/P, Convertible w/ VSC * 3 : Convertible w/o VSC

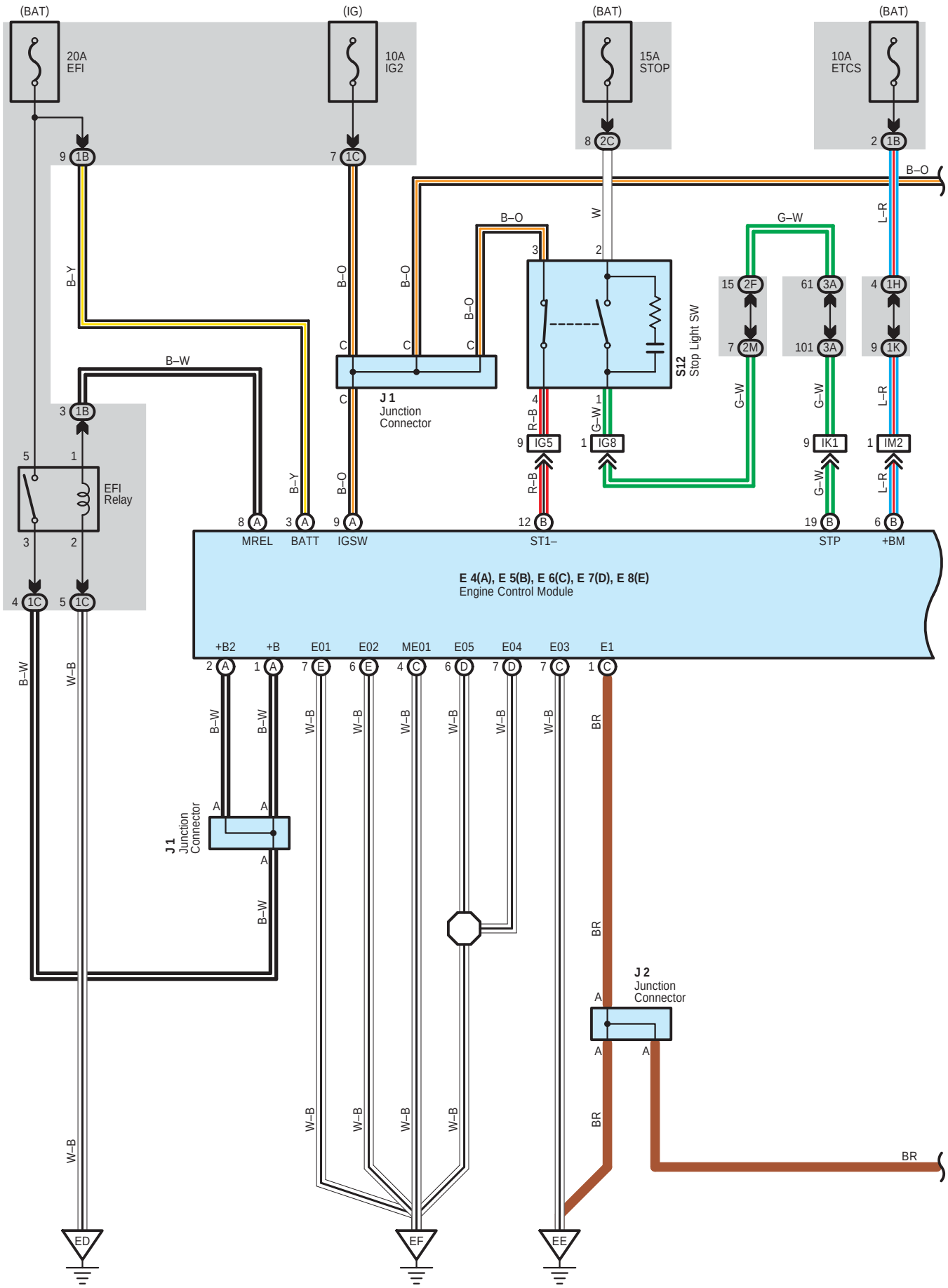
(BAT)
20A
EFI
(IG)
10A
IG2
(BAT)
15A
STOP
(BAT)
10A
ETCS
9 1B
7 1C
8 2C
2 1B
B–O
B–Y
B–O
B–O
B–O
W
G–W
L–R
B–O
3
2
15 2F
61 3A
4 1H
7 2M
101 3A
9 1K
S12
Stop Light SW
B–W
C
C
C
C
J 1
Junction
Connector
G–W
G–W
L–R
3 1B
4
1
R–B
G–W
9 IG5
1 IG8
9 IK1
1 IM2
5
1
EFI
Relay
B–Y
B–O
R–B
G–W
L–R
8 A
3 A
9 A
12 B
19 B
6 B
MREL
BATT
IGSW
ST1–
STP
+BM
3
2
E 4(A), E 5(B), E 6(C), E 7(D), E 8(E)
Engine Control Module
4 1C
5 1C
+B2
+B
E01
E02
ME01
E05
E04
E03
E1
2 A
1 A
7 E
6 E
4 C
6 D
7 D
7 C
1 C
B–W
W–B
B–W
B–W
W–B
W–B
W–B
W–B
W–B
W–B
BR
A
A
J 1
Junction
Connector
A
B–W
BR
J 2
Junction
Connector
A
A
A
W–B
W–B
W–B
W–B
BR
BR
W–B
BR
ED
EF
EE

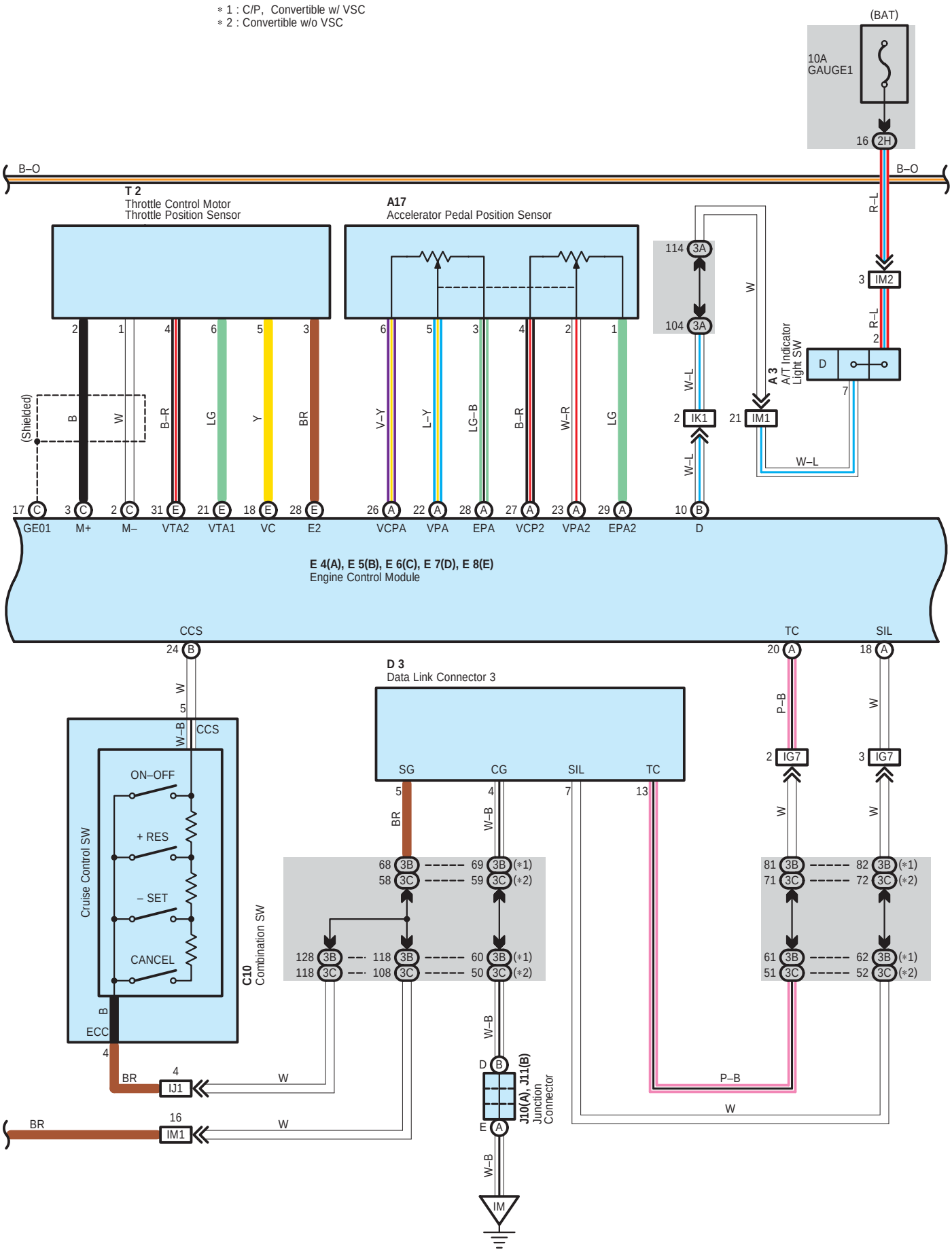
* 1 : C/P, Convertible w/ VSC
* 2 : Convertible w/o VSC
(BAT)
10A
GAUGE1
16 2H
B–O
B–O
T 2
Throttle Control Motor
Throttle Position Sensor
A17
Accelerator Pedal Position Sensor
R–L
3 IM2
R–L
2
A 3
A/T Indicator
Light SW
D
7
114 3A
104 3A
W
W–L
2 IK1
21 IM1
W–L
W–L
(Shielded)
B
W
B–R
LG
Y
BR
V–Y
L–Y
LG–B
B–R
W–R
LG
17 C GE01
3 C M+
2 C M–
31 E VTA2
21 E VTA1
18 E VC
28 E E2
26 A VCPA
22 A VPA
28 A EPA
27 A VCP2
23 A VPA2
29 A EPA2
10 B D
E 4(A), E 5(B), E 6(C), E 7(D), E 8(E)
Engine Control Module
CCS
24 B
W
5
W–B
CCS
ON–OFF
+ RES
– SET
CANCEL
Cruise Control SW
C10
Combination SW
B
ECC
4
BR
4
IJ1
W
BR
16
IM1
W
D 3
Data Link Connector 3
SG
CG
SIL
TC
5
BR
4
W–B
7
13
68 3B
58 3C
69 3B (*1)
59 3C (*2)
128 3B
118 3C
118 3B
108 3C
60 3B (*1)
50 3C (*2)
W–B
D B
J10(A), J11(B)
Junction
Connector
E A
W–B
IM
TC
SIL
20 A
18 A
P–B
W
2 IG7
3 IG7
W
W
81 3B
71 3C
82 3B (*1)
72 3C (*2)
61 3B
51 3C
62 3B (*1)
52 3C (*2)
P–B
W

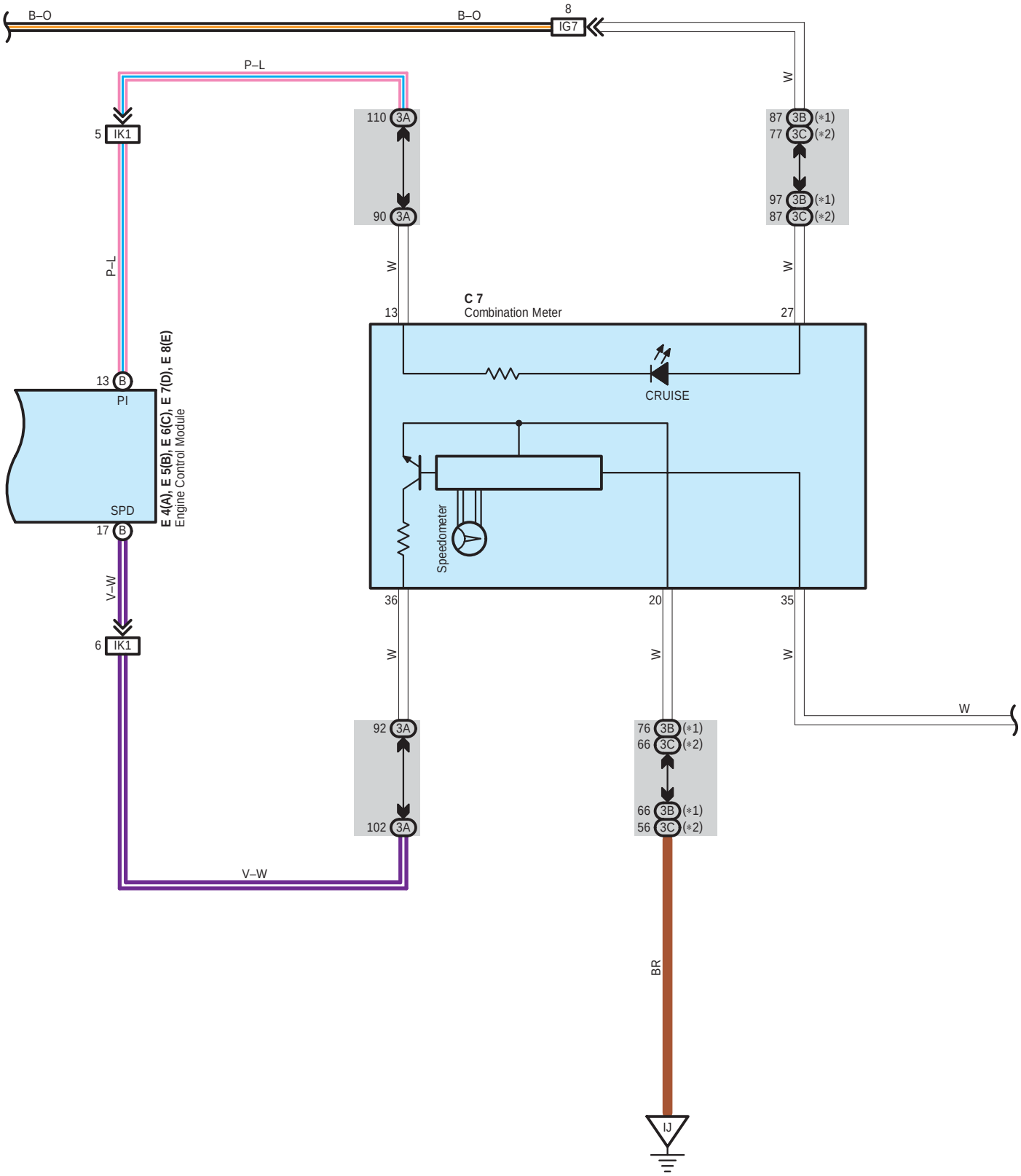
B–O
B–O
8
IG7
P–L
W
5
IK1
110
3A
90
3A
87
3B
(*1)
77
3C
(*2)
97
3B
(*1)
87
3C
(*2)
P–L
W
W
C 7
Combination Meter
13
27
13
B
PI
E 4(A), E 5(B), E 6(C), E 7(D), E 8(E)
Engine Control Module
CRUISE
SPD
17
B
Speedometer
V–W
36
20
35
6
IK1
W
W
W
W
92
3A
102
3A
76
3B
(*1)
66
3C
(*2)
66
3B
(*1)
56
3C
(*2)
V–W
BR
IJ

∗ 1 : C/P, Convertible w/ VSC
∗ 2 : Convertible w/o VSC
∗ 3 : w/ VSC
∗ 4 : w/o VSC

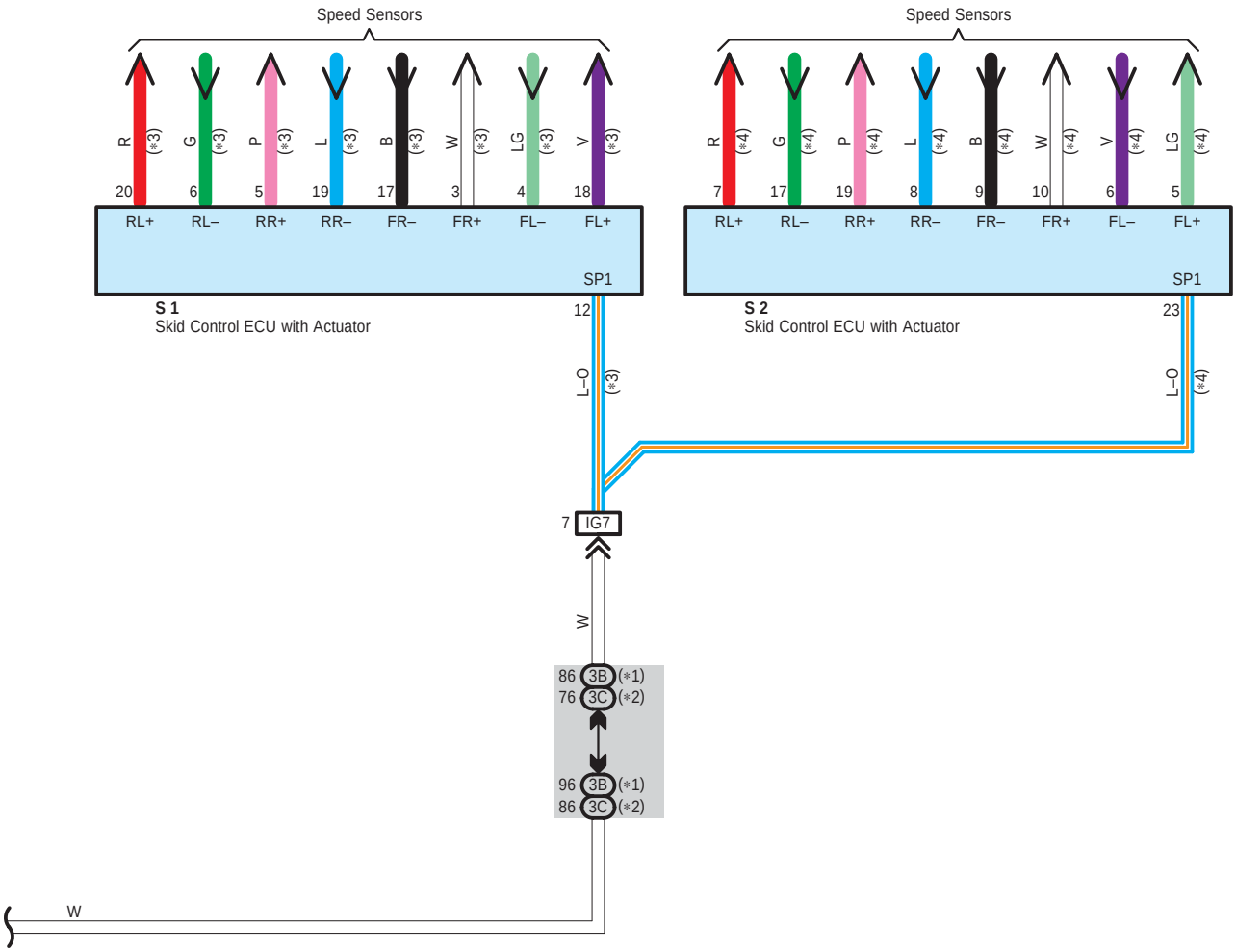

Cruise Control for 3MZ–FE

System Outline

The cruise control system is a constant vehicle speed controller in which control of the switch on the instrument panel makes it possible to automatically adjust the opening of the engine throttle valve without depressing of the accel. pedal.

1. Set Operation

When the ON–OFF SW is turned on, the system starts preparations necessary for the cruise control and turns on the indicator light in the combination meter.

2. Set Speed Control

When the – SET SW is operated with the cruise control SW turned on during travelling, the constant vehicle speed is controlled.

3. Coast Control

When the – SET SW is kept turned on during cruise control travelling, the engine control module controls the throttle valve to decelerate the vehicle. Every time the – SET SW is turned on instantaneously, the vehicle speed is decelerated approximately 1.6 km/h.

4. Accel Control

When the + RES SW is kept turned on during cruise control travelling, the engine control module controls the throttle valve to accelerate the vehicle. Every time the + RES SW is turned on instantaneously, the vehicle speed is accelerated approximately 1.6 km/h.

5. Resume Control

When the vehicle speed is within the low speed limit (Approximately 40 km/h, 25 mph) if the cruise control is cancelled, use of the + RES SW accelerates the vehicle to the speed level used before canceling the cruise control.

6. Manual Cancel Mechanism

If any of the following signals is input during cruise control travelling, the cruise control is cancelled.

* The stop light SW is turned on.
* The CANCEL SW is turned on.
* The ON–OFF SW is turned off.
* Gear is shifted from D position to N position.
* Gear is shifted from 4 to 3 in S mode.

7. Auto Cancel Function

If any of the following conditions is encountered, the cruise control is automatically cancelled.

* The stop light SW wiring is faulty or short–circuited.
* The vehicle speed signal is faulty.
* The electronically controlled throttle malfunctions.

○ : Parts Location

Code	See Page	Code	See Page	Code	See Page
A3	40 (3MZ–FE)	E5 B	44 (C/P)	J2	47 (*1)
A17	44 (C/P)		46 (*1)	J10 A	45 (C/P)
	46 (*1)	E6 C	44 (C/P)		47 (*1)
C7	44 (C/P)		46 (*1)	J11 B	45 (C/P)
	46 (*1)	E7 D	44 (C/P)		47 (*1)
C10	44 (C/P)		46 (*1)	S1	41 (3MZ–FE)
	46 (*1)	E8 E	44 (C/P)	S2	41 (3MZ–FE)
D3	44 (C/P)		46 (*1)	S12	45 (C/P)
	46 (*1)	J1	45 (C/P)		47 (*1)
E4 A	44 (C/P)		47 (*1)	T2	41 (3MZ–FE)
	46 (*1)	J2	45 (C/P)		

* 1 : Convertible * 2 : C/P, Convertible w/ VSC * 3 : Convertible w/o VSC

: **Junction Block and Wire Harness Connector**

Code	See Page	Junction Block and Wire Harness (Connector Location)
1B	27	Engine Room Main Wire and Engine Room J/B (Engine Compartment Left)
1C		
1H		
1K	27	Engine Wire and Engine Room J/B (Engine Compartment Left)
2C	30	Engine Room Main Wire and Driver Side J/B (Lower Finish Panel)
2F	30	Instrument Panel Wire and Driver Side J/B (Lower Finish Panel)
2H	31	
2M	30	
3A	36 (*2)	Instrument Panel Wire and Passenger Side J/B (Instrument Panel Brace RH)
	37 (*3)	
3B	36 (*2)	
3C	37 (*3)	

: **Connector Joining Wire Harness and Wire Harness**

Code	See Page	Joining Wire Harness and Wire Harness (Connector Location)
IG5	56 (C/P)	Engine Room Main Wire and Instrument Panel Wire (Behind the Radio and Player)
	58 (*1)	
IG7	56 (C/P)	
	58 (*1)	
IG8	56 (C/P)	
	58 (*1)	
IJ1	57 (C/P)	Instrument Panel Wire and Instrument Panel Wire (Instrument Panel Reinforcement RH)
	59 (*1)	
IK1	57 (C/P)	
	59 (*1)	
IM1	57 (C/P)	Engine Wire and Instrument Panel Wire (Behind the Glove Box)
	59 (*1)	
IM2	57 (C/P)	
	59 (*1)	

: **Ground Points**

Code	See Page	Ground Points Location
ED	54 (3MZ–FE)	Left Fender
EE	54 (3MZ–FE)	Right Side of Cylinder Head
EF	54 (3MZ–FE)	Left Side of Cylinder Head
IJ	56 (C/P)	Instrument Panel Brace LH
	58 (*1)	
IM	56 (C/P)	Instrument Panel Reinforcement RH
	58 (*1)	

* 1 : Convertible * 2 : C/P, Convertible w/ VSC * 3 : Convertible w/o VSC

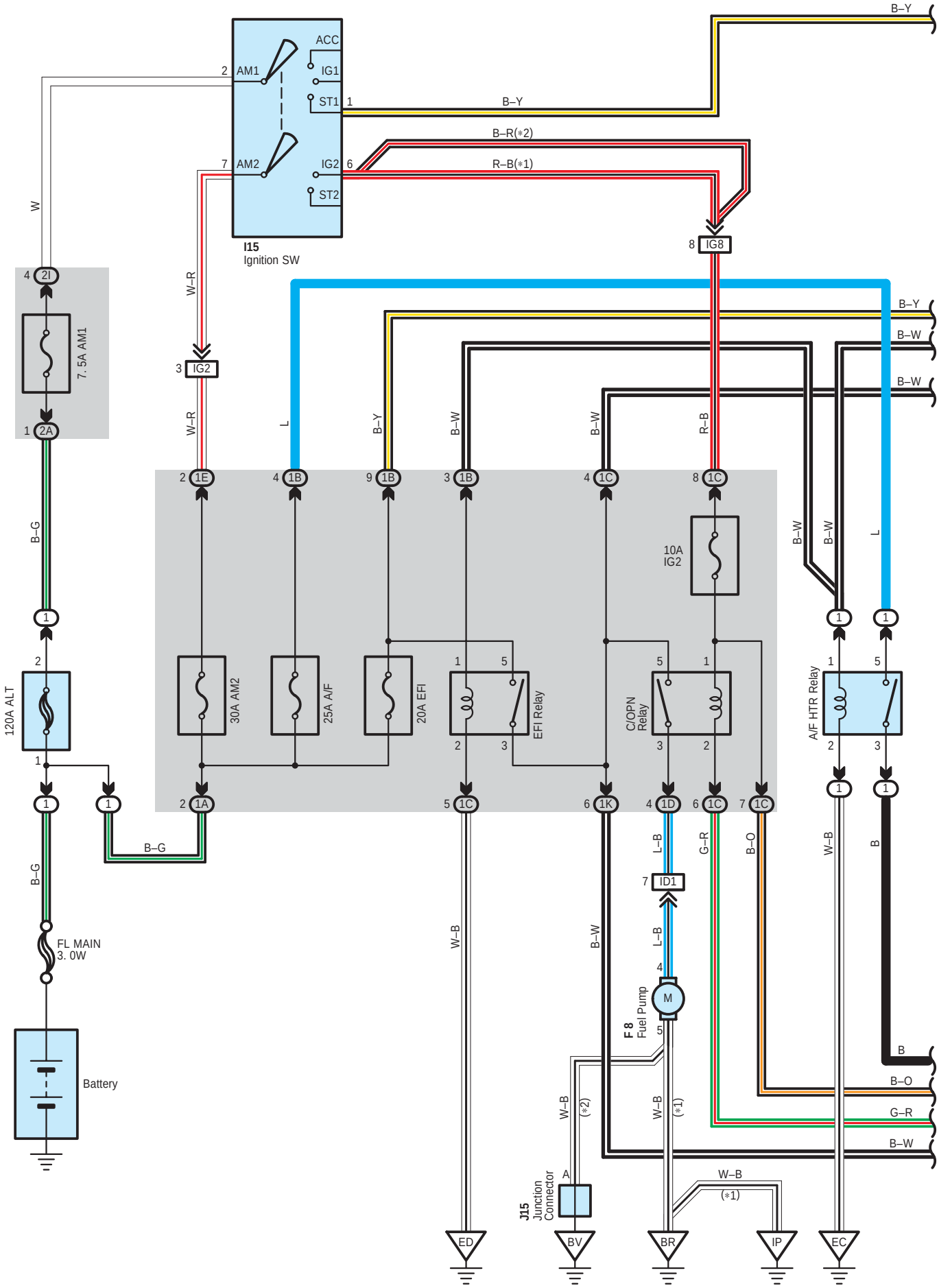
I15
Ignition SW
ACC
IG1
ST1
AM1
AM2
IG2
ST2
B–Y
B–R(*2)
R–B(*1)
IG8
IG2
7. 5A AM1
2I
2A
W
W–R
B–G
120A ALT
FL MAIN
3. 0W
Battery
1E
1B
1C
1K
1D
1A
30A AM2
25A A/F
20A EFI
EFI Relay
C/OPN
Relay
10A
IG2
A/F HTR Relay
B–W
L
R–B
B–O
G–R
B
L–B
ID1
F 8
Fuel Pump
M
J15
Junction
Connector
A
(*2)
(*1)
ED
BV
BR
IP
EC

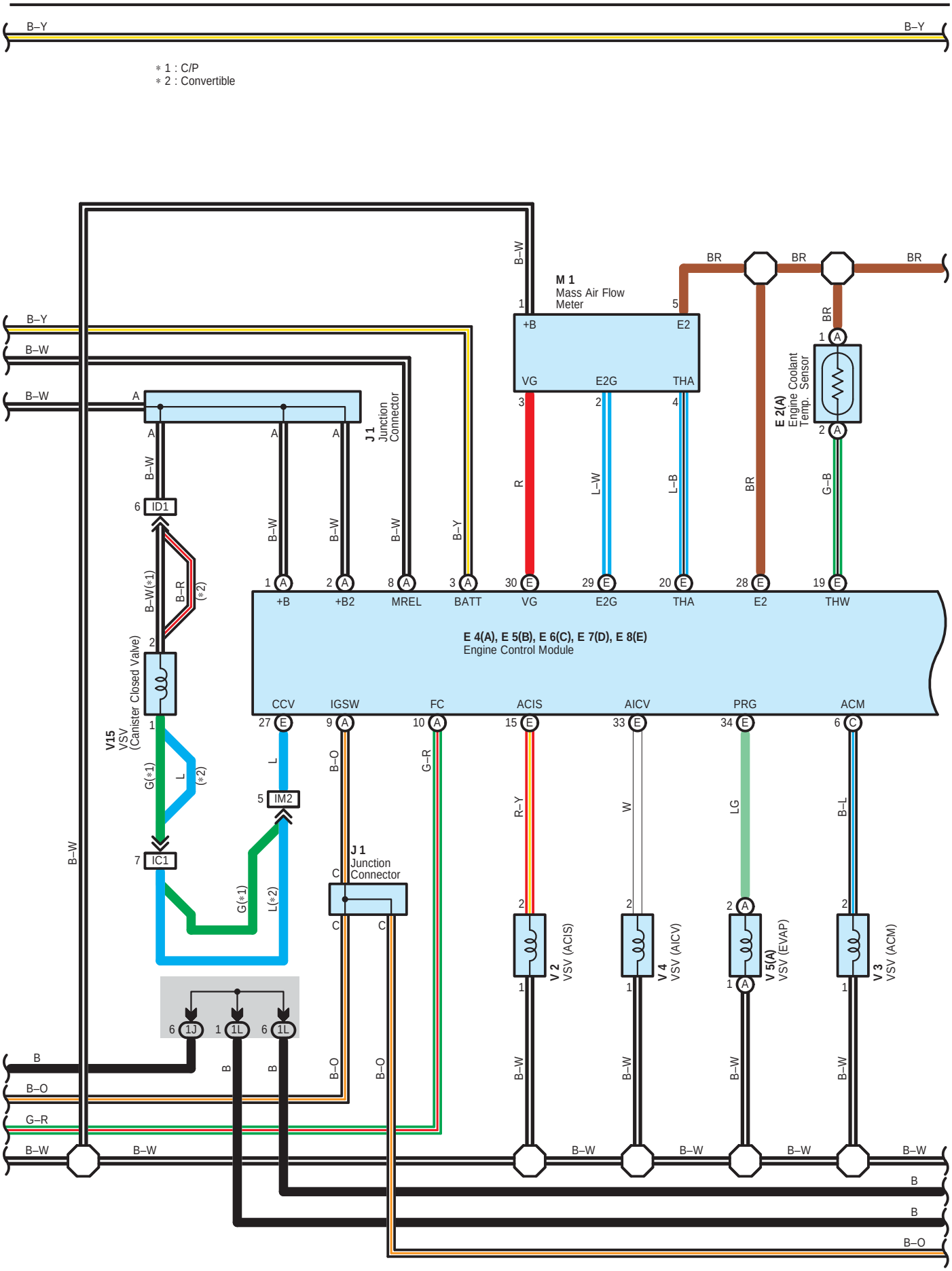
B–Y
B–Y
* 1 : C/P
* 2 : Convertible
M 1
Mass Air Flow
Meter
+B
E2
VG
E2G
THA
BR
BR
BR
E 2(A)
Engine Coolant
Temp. Sensor
J 1
Junction
Connector
B–W
B–W
B–W
B–Y
R
L–W
L–B
BR
G–B
ID1
B–W(*1)
B–R
(*2)
V15
VSV
(Canister Closed Valve)
G(*1)
L
(*2)
IC1
IM2
G(*1)
L(*2)
+B
+B2
MREL
BATT
VG
E2G
THA
E2
THW
E 4(A), E 5(B), E 6(C), E 7(D), E 8(E)
Engine Control Module
CCV
IGSW
FC
ACIS
AICV
PRG
ACM
B–O
G–R
R–Y
W
LG
B–L
J 1
Junction
Connector
V 2
VSV (ACIS)
V 4
VSV (AICV)
V 5(A)
VSV (EVAP)
V 3
VSV (ACM)
1J
1L
1L
B
B–O
G–R
B–W
B–W
B–W
B–W
B–W
B–W
B–W
B
B
B–O

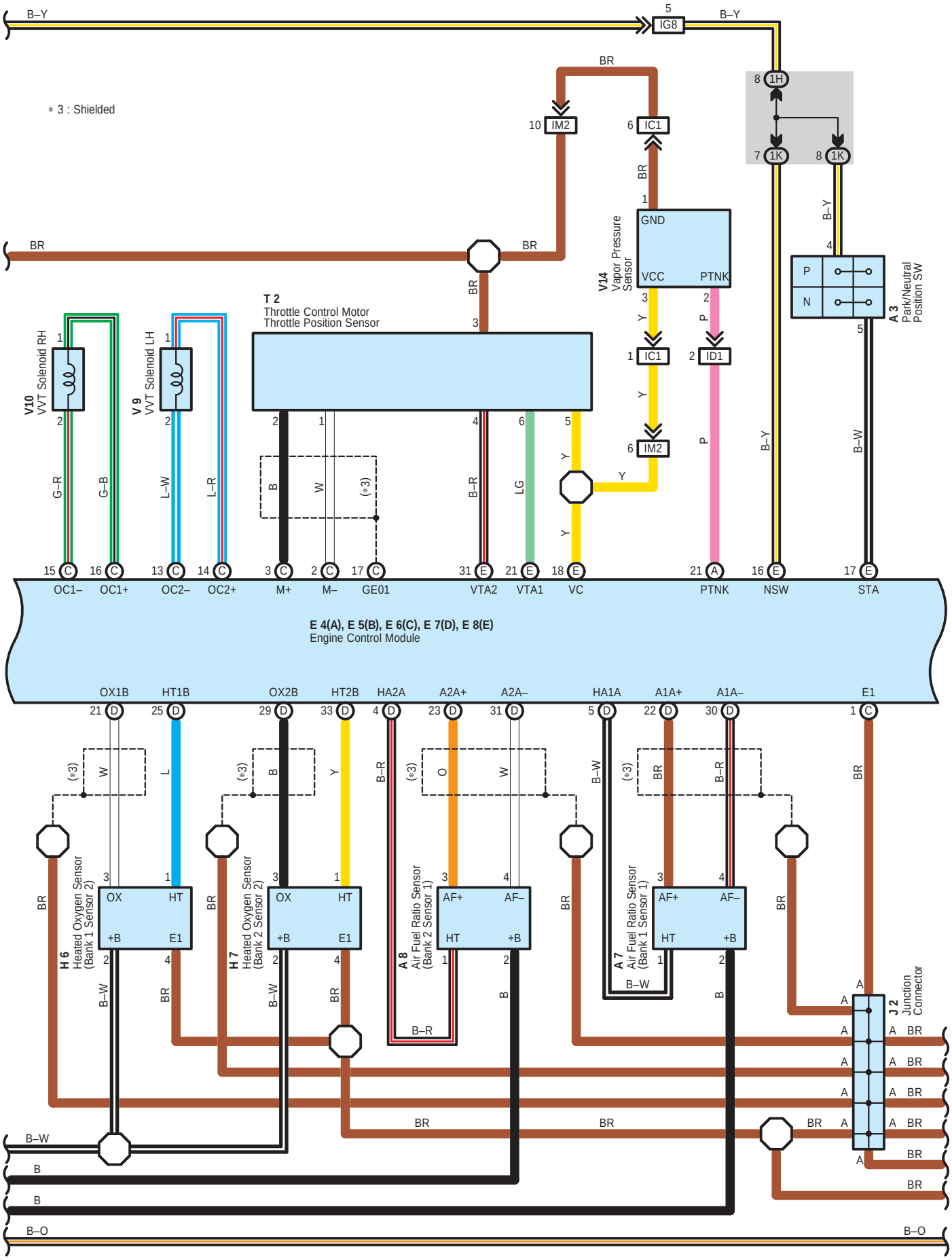
B–Y
5
IG8
B–Y
BR
8 1H
∗ 3 : Shielded
10 IM2
6 IC1
7 1K
8 1K
BR
1
GND
V14
Vapor Pressure
Sensor
VCC
PTNK
B–Y
4
P
N
A 3
Park/Neutral
Position SW
BR
BR
BR
3
T 2
Throttle Control Motor
Throttle Position Sensor
V10
VVT Solenoid RH
V 9
VVT Solenoid LH
3
Y
2
P
1 IC1
2 ID1
Y
6 IM2
P
B–Y
B–W
G–R
G–B
L–W
L–R
B
W
(∗3)
B–R
LG
Y
Y
Y
15 C
16 C
13 C
14 C
3 C
2 C
17 C
31 E
21 E
18 E
21 A
16 E
17 E
OC1–
OC1+
OC2–
OC2+
M+
M–
GE01
VTA2
VTA1
VC
PTNK
NSW
STA
E 4(A), E 5(B), E 6(C), E 7(D), E 8(E)
Engine Control Module
OX1B
HT1B
OX2B
HT2B
HA2A
A2A+
A2A–
HA1A
A1A+
A1A–
E1
21 D
25 D
29 D
33 D
4 D
23 D
31 D
5 D
22 D
30 D
1 C
(∗3)
W
L
(∗3)
B
Y
B–R
(∗3)
O
W
B–W
(∗3)
BR
B–R
BR
BR
H 6
Heated Oxygen Sensor
(Bank 1 Sensor 2)
OX
HT
+B
E1
H 7
Heated Oxygen Sensor
(Bank 2 Sensor 2)
OX
HT
+B
E1
A 8
Air Fuel Ratio Sensor
(Bank 2 Sensor 1)
AF+
AF–
HT
+B
A 7
Air Fuel Ratio Sensor
(Bank 1 Sensor 1)
AF+
AF–
HT
+B
B–W
B–R
B–W
BR
B–W
BR
B
B
J 2
Junction
Connector
A
A BR
BR
BR
BR
BR
BR
BR
BR
BR
B–W
B
B
B–O
B–O

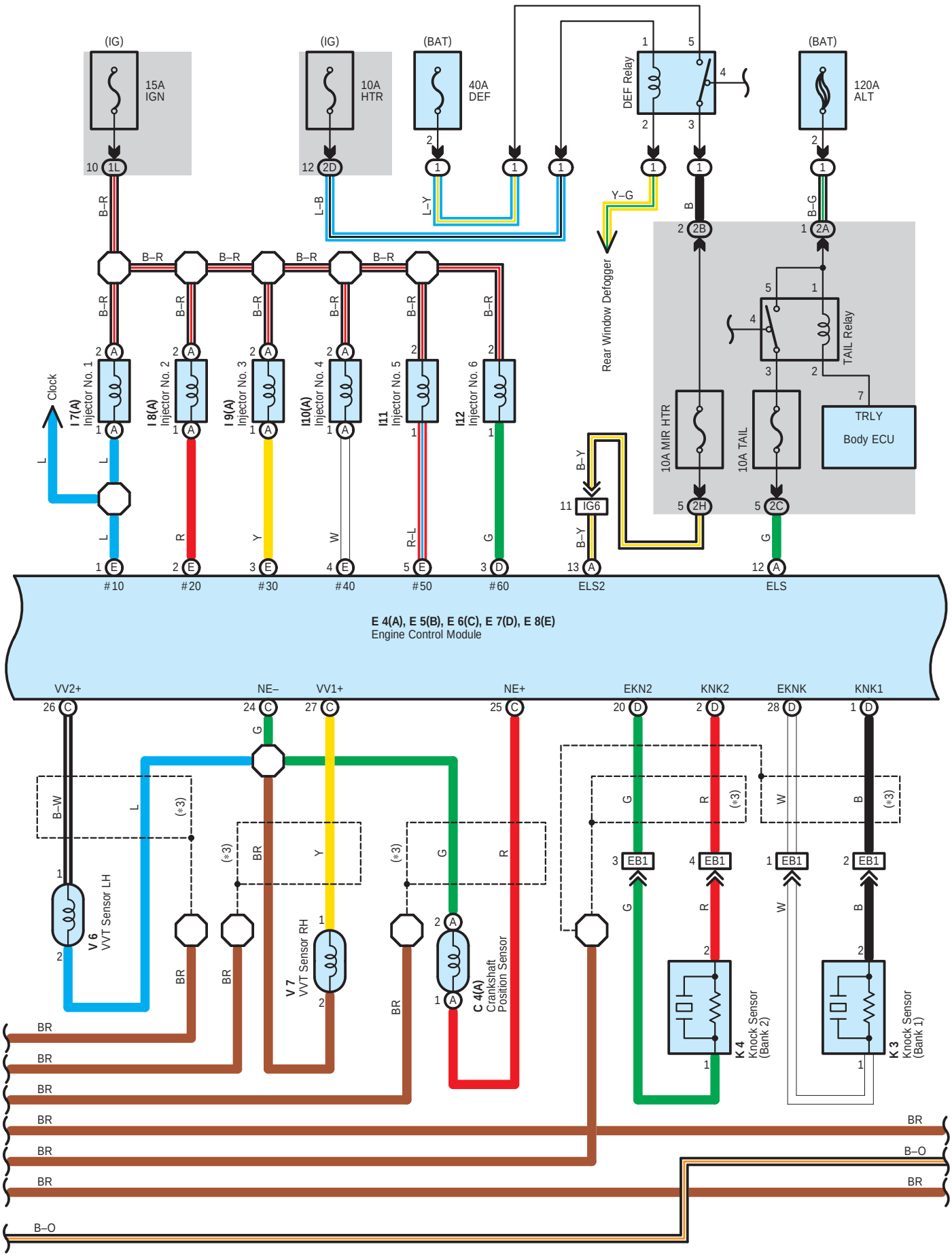
(IG)
15A
IGN
(IG)
10A
HTR
(BAT)
40A
DEF
DEF Relay
(BAT)
120A
ALT
Rear Window Defogger
TAIL Relay
10A MIR HTR
10A TAIL
TRLY
Body ECU
Clock
I 7(A)
Injector No. 1
I 8(A)
Injector No. 2
I 9(A)
Injector No. 3
I10(A)
Injector No. 4
I11
Injector No. 5
I12
Injector No. 6
IG6
#10
#20
#30
#40
#50
#60
ELS2
ELS
E 4(A), E 5(B), E 6(C), E 7(D), E 8(E)
Engine Control Module
VV2+
NE–
VV1+
NE+
EKN2
KNK2
EKNK
KNK1
V 6
VVT Sensor LH
V 7
VVT Sensor RH
C 4(A)
Crankshaft
Position Sensor
EB1
K 4
Knock Sensor
(Bank 2)
K 3
Knock Sensor
(Bank 1)

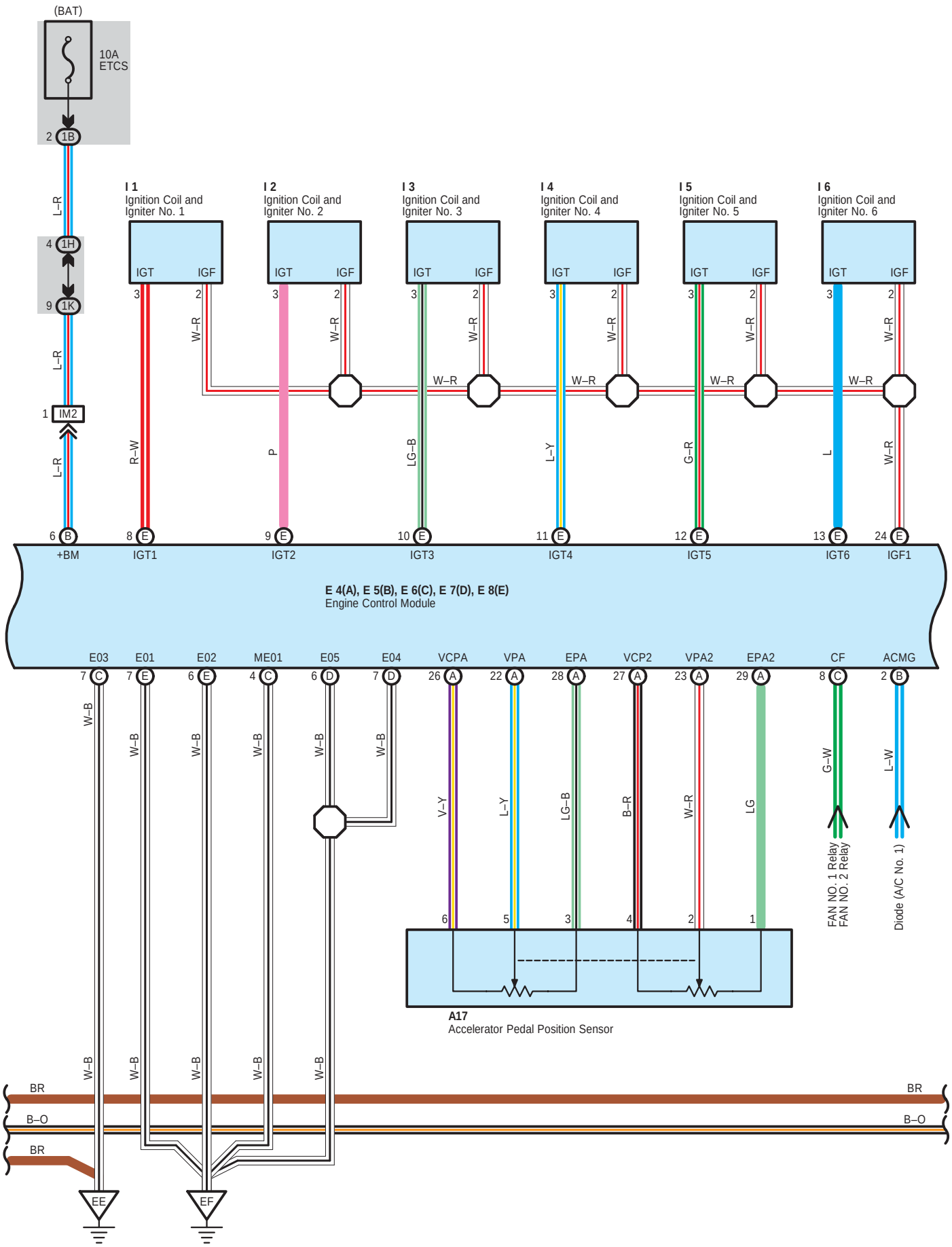
(BAT)
10A
ETCS
2 1B
4 1H
9 1K
1 IM2
L–R
I 1
Ignition Coil and
Igniter No. 1
I 2
Ignition Coil and
Igniter No. 2
I 3
Ignition Coil and
Igniter No. 3
I 4
Ignition Coil and
Igniter No. 4
I 5
Ignition Coil and
Igniter No. 5
I 6
Ignition Coil and
Igniter No. 6
IGT
IGF
W–R
R–W
P
LG–B
L–Y
G–R
L
6 B
+BM
8 E
IGT1
9 E
IGT2
10 E
IGT3
11 E
IGT4
12 E
IGT5
13 E
IGT6
24 E
IGF1
E 4(A), E 5(B), E 6(C), E 7(D), E 8(E)
Engine Control Module
E03
E01
E02
ME01
E05
E04
VCPA
VPA
EPA
VCP2
VPA2
EPA2
CF
ACMG
7 C
7 E
6 E
4 C
6 D
7 D
26 A
22 A
28 A
27 A
23 A
29 A
8 C
2 B
W–B
V–Y
B–R
LG
G–W
L–W
FAN NO. 1 Relay
FAN NO. 2 Relay
Diode (A/C No. 1)
A17
Accelerator Pedal Position Sensor
BR
B–O
EE
EF

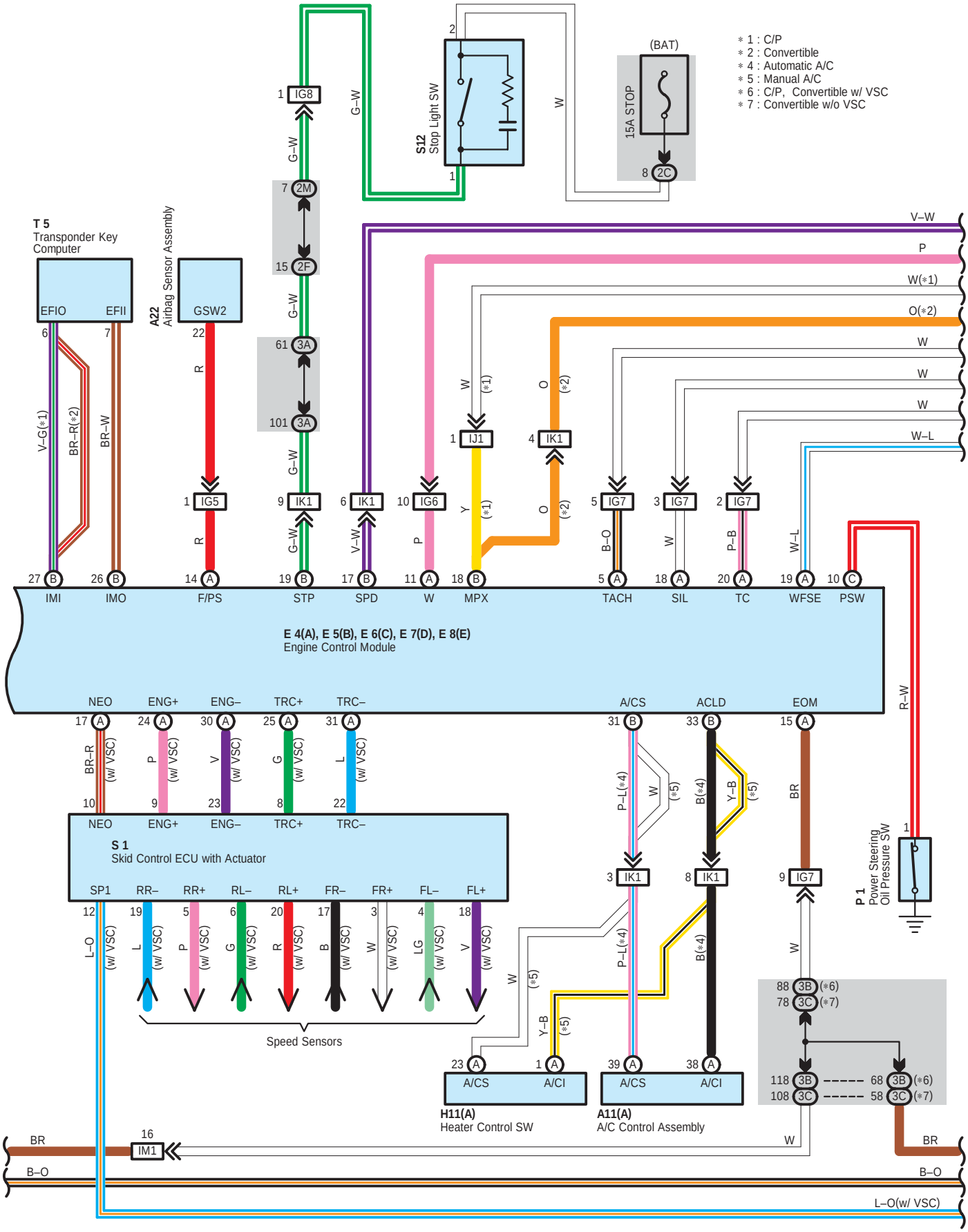
∗1 : C/P
∗2 : Convertible
∗4 : Automatic A/C
∗5 : Manual A/C
∗6 : C/P, Convertible w/ VSC
∗7 : Convertible w/o VSC
(BAT)
15A STOP
S12
Stop Light SW
T 5
Transponder Key Computer
EFIO
EFII
A22
Airbag Sensor Assembly
GSW2
IG8
2M
2F
3A
IG5
IK1
IG6
IJ1
IG7
E 4(A), E 5(B), E 6(C), E 7(D), E 8(E)
Engine Control Module
IMI
IMO
F/PS
STP
SPD
W
MPX
TACH
SIL
TC
WFSE
PSW
NEO
ENG+
ENG–
TRC+
TRC–
A/CS
ACLD
EOM
S 1
Skid Control ECU with Actuator
SP1
RR–
RR+
RL–
RL+
FR–
FR+
FL–
FL+
Speed Sensors
H11(A)
Heater Control SW
A11(A)
A/C Control Assembly
A/CI
P 1
Power Steering Oil Pressure SW
IM1
BR
B–O
L–O(w/ VSC)

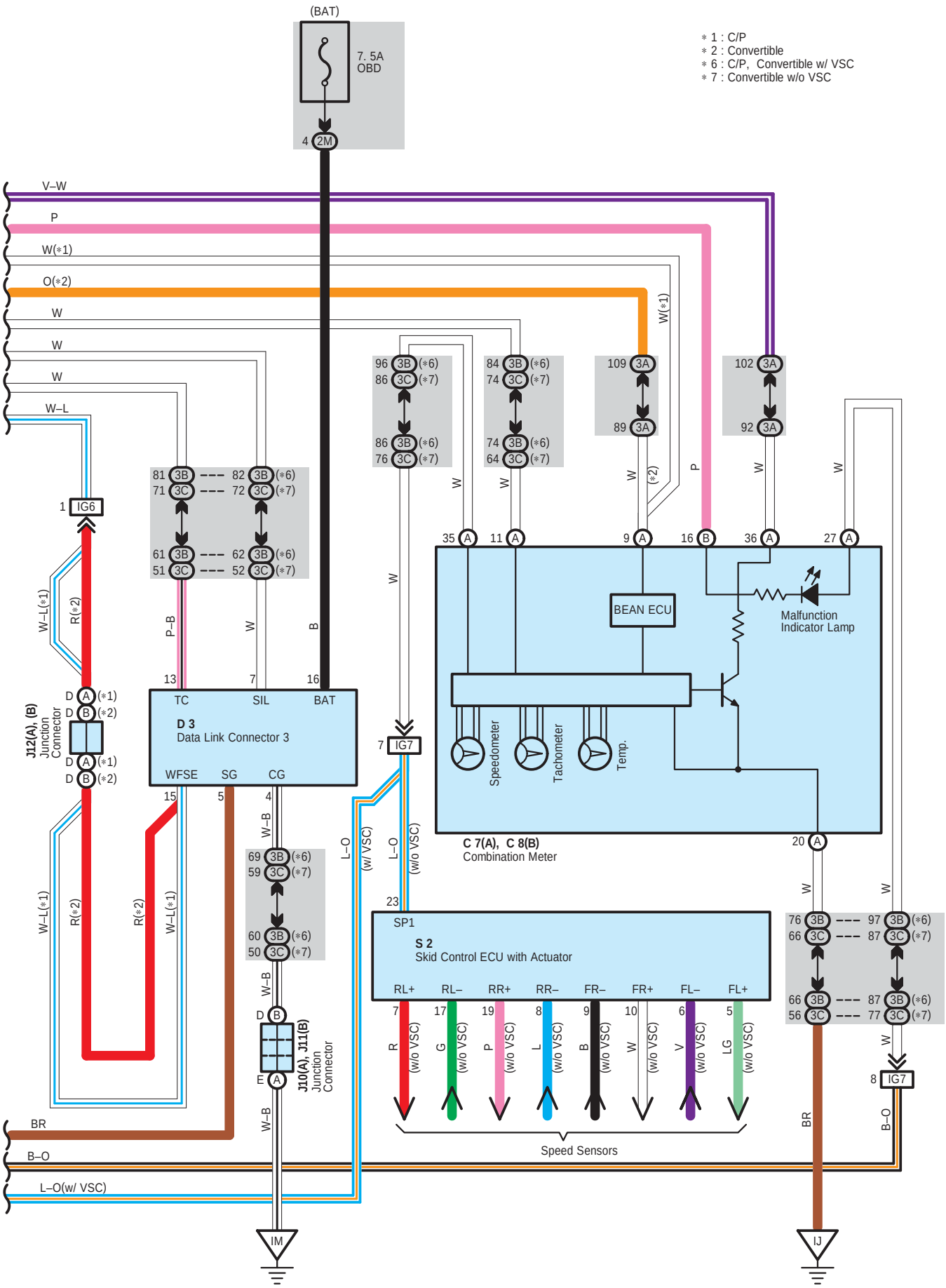
(BAT)
7. 5A
OBD
4 2M
∗ 1 : C/P
∗ 2 : Convertible
∗ 6 : C/P, Convertible w/ VSC
∗ 7 : Convertible w/o VSC
V–W
P
W(∗1)
O(∗2)
W
W–L
1 IG6
81 3B --- 82 3B (∗6)
71 3C --- 72 3C (∗7)
61 3B --- 62 3B (∗6)
51 3C --- 52 3C (∗7)
96 3B (∗6)
86 3C (∗7)
86 3B (∗6)
76 3C (∗7)
84 3B (∗6)
74 3C (∗7)
74 3B (∗6)
64 3C (∗7)
109 3A
89 3A
102 3A
92 3A
35 A
11 A
9 A
16 B
36 A
27 A
BEAN ECU
Malfunction
Indicator Lamp
Speedometer
Tachometer
Temp.
C 7(A), C 8(B)
Combination Meter
20 A
W–L(∗1)
R(∗2)
P–B
13
7
16
TC
SIL
BAT
D 3
Data Link Connector 3
WFSE
SG
CG
15
5
4
7 IG7
J12(A), (B)
Junction
Connector
D A (∗1)
D B (∗2)
W–B
69 3B (∗6)
59 3C (∗7)
60 3B (∗6)
50 3C (∗7)
L–O
(w/ VSC)
(w/o VSC)
23
SP1
S 2
Skid Control ECU with Actuator
RL+
RL–
RR+
RR–
FR–
FR+
FL–
FL+
R
G
P
L
B
W
V
LG
Speed Sensors
76 3B --- 97 3B (∗6)
66 3C --- 87 3C (∗7)
66 3B --- 87 3B (∗6)
56 3C --- 77 3C (∗7)
8 IG7
J10(A), J11(B)
Junction
Connector
E A
BR
B–O
L–O(w/ VSC)
IM
IJ

System Outline

This system utilizes an engine control module and maintains overall control of the engine, transmission and so on. An outline of the engine control is explained here.

1. Input Signals

(1) Engine coolant temp. signal circuit

The engine coolant temp. sensor detects the engine coolant temp. and has a built–in thermistor with a resistance which varies according to the water temp. is input into TERMINAL THW of the engine control module as a control signal.

(2) Intake air temp. signal circuit

The intake air temp. sensor is installed in the mass air flow meter and detects the intake air temp., which is input as a control signal into TERMINAL THA of the engine control module.

(3) Oxygen sensor signal circuit

The oxygen density in the exhaust gases is detected and input as a control signal into TERMINALS OX1B and OX2B of the engine control module. To maintain stable detection performance by the heated oxygen sensor, a heater is used for warming the sensor. The heater is also controlled by the engine control module (HT1B and HT2B).

(4) Throttle signal circuit

The throttle position sensor detects the throttle valve opening angle as a control signal, which is input into TERMINALS VTA1 and VTA2 of the engine control module.

(5) Vehicle speed signal circuit

The vehicle speed sensor, detects the vehicle speed and input to ABS speed sensor of the skid control ECU with actuator, from skid control ECU with actuator to TERMINAL SPD of the engine control module, Via combination meter.

(6) Park/Neutral position SW signal circuit (A/T)

The Park/Neutral position SW detects whether the shift position is in neutral, parking or not, and inputs a control signal into TERMINAL NSW of the engine control module.

(7) A/C SW signal circuit

The A/C control assembly (Automatic A/C) or heater control SW (Manual A/C) inputs the A/C operations into TERMINAL A/CS of the engine control module as a control signal.

(8) Battery signal circuit

Voltage is always supplies to TERMINAL BATT of the engine control module.
If you turn on the ignition SW, the current goes from TERMINAL MREL of the engine control module to the EFI relay and put on the relay, and the voltage related to the engine control module operation is supplied to TERMINALS +B and +B2 of the engine control module through the EFI relay.

(9) Intake air volume signal circuit

Intake air volume is detected by the mass air flow meter and a signal is input into TERMINAL VG of the engine control module as a control signal.

(10) Starter signal circuit

To confirm whether the engine is cranking, the voltage applied to the starter motor during cranking is detected and the signal is input into TERMINAL STA of the engine control module as a control signal.

(11) Engine knock signal circuit

Engine knocking is detected by the knock sensor No.1 and No.2, then the signals are input into TERMINALS KNK1 and KNK2 of the engine control module as a control signal.

(12) Air fuel ratio signal circuit

The air fuel ratio is detected and input as a control signal into TERMINALS A1A+, A2A+ of the engine control module.

2. Control System

∗ SFI system
The SFI system monitors the engine condition through the signals, which are input from each sensor to engine control module. The best fuel injection volume is decided based on this data and the program memorized by the engine control module, and the control signal is output to TERMINALS #10, #20, #30, #40, #50 and #60 of the engine control module to operate the injector (Inject the fuel). The SFI system produces control of fuel injection operation by the engine control module in response to the driving conditions.

∗ ESA system
The ESA system monitors the engine condition through the signals, which are input to the engine control module from each sensor. The best ignition timing is decided according to this data and the memorized data in the engine control module, and the control signal is output to TERMINALS IGT1, IGT2, IGT3, IGT4, IGT5 and IGT6. This signal controls the igniter to provide the best ignition timing for the driving conditions.

∗ Heated oxygen sensor heater control system
The heated oxygen sensor heater control system turns the heater on when the intake air volume is low (Temp. of exhaust emissions is low), and warms up the heated oxygen sensor to improve detection performance of the sensor.
The engine control module evaluates the signals from each sensor, current is output to TERMINALS HT1B and HT2B, controlling the heater.

∗ Air fuel ratio sensor heater control system
The air fuel ratio sensor heater control system turns the heater on when the intake air volume is low (Temp. of exhaust emission is low), and warms up the air fuel ratio sensor to improve detection performance of the sensor.
The engine control module evaluates the signals from each sensor, current is output to TERMINALS HA1A and HA2A, controlling the heater.

∗ ACIS
ACIS includes a valve in the bulkhead separating the surge tank into two parts. This valve is opened and closed in accordance with the driving conditions to control the intake manifold length in two stages for increased engine output in all ranges from low to high speeds.
The engine control module judges the engine speed by the signals from each sensor and outputs current to the TERMINAL ACIS to control the VSV (ACIS).

3. Diagnosis System

With the diagnosis system, when there is a malfunction in the engine control module signal system, the malfunctioning system is recorded in the memory.

4. Fail–Safe System

When a malfunction occurs in any systems, if there is a possibility of engine trouble being caused by continued control based on the signals from that system, the fail–safe system either controls the system by using data (Standard values) recorded in the engine control module memory or else stops the engine.

: Parts Location

Code		See Page	Code		See Page	Code		See Page
A3		40 (3MZ–FE)	F8		48 (C/P)	J11	B	47 (*1)
A7		40 (3MZ–FE)			50 (*1)	J12	A	45 (C/P)
A8		40 (3MZ–FE)	H6		40 (3MZ–FE)		B	47 (*1)
A11	A	44 (C/P)	H7		40 (3MZ–FE)	J15		50 (*1)
		46 (*1)	H11	A	44 (C/P)	K3		41 (3MZ–FE)
A17		44 (C/P)			46 (*1)	K4		41 (3MZ–FE)
		46 (*1)	I1		41 (3MZ–FE)	M1		41 (3MZ–FE)
A22		44 (C/P)	I2		41 (3MZ–FE)	P1		41 (3MZ–FE)
		46 (*1)	I3		41 (3MZ–FE)	S1		41 (3MZ–FE)
C4	A	40 (3MZ–FE)	I4		41 (3MZ–FE)	S2		41 (3MZ–FE)
C7	A	44 (C/P)	I5		41 (3MZ–FE)	S12		45 (C/P)
		46 (*1)	I6		41 (3MZ–FE)			47 (*1)
C8	B	44 (C/P)	I7	A	41 (3MZ–FE)	T2		41 (3MZ–FE)
		46 (*1)	I8	A	41 (3MZ–FE)	T5		45 (C/P)
D3		44 (C/P)	I9	A	41 (3MZ–FE)			47 (*1)
		46 (*1)	I10	A	41 (3MZ–FE)	V2		41 (3MZ–FE)
E2	A	40 (3MZ–FE)	I11		41 (3MZ–FE)	V3		41 (3MZ–FE)
E4	A	44 (C/P)	I12		41 (3MZ–FE)	V4		41 (3MZ–FE)
		46 (*1)	I15		45 (C/P)	V5	A	41 (3MZ–FE)
E5	B	44 (C/P)			47 (*1)	V6		41 (3MZ–FE)
		46 (*1)	J1		45 (C/P)	V7		41 (3MZ–FE)
E6	C	44 (C/P)			47 (*1)	V9		41 (3MZ–FE)
		46 (*1)	J2		45 (C/P)	V10		41 (3MZ–FE)
E7	D	44 (C/P)			47 (*1)	V14		49 (C/P)
		46 (*1)	J10	A	45 (C/P)			51 (*1)
E8	E	44 (C/P)			47 (*1)	V15		49 (C/P)
		46 (*1)	J11	B	45 (C/P)			51 (*1)

: Relay Blocks

Code	See Page	Relay Blocks (Relay Block Location)
1	24	Engine Room R/B (Engine Compartment Left)

* 1 : Convertible * 2 : C/P, Convertible w/ VSC * 3 : Convertible w/o VSC

: Junction Block and Wire Harness Connector

Code	See Page	Junction Block and Wire Harness (Connector Location)
1A	27	Engine Room Main Wire and Engine Room J/B (Engine Compartment Left)
1B		
1C		
1D		
1E		
1H		
1J		
1K	27	Engine Wire and Engine Room J/B (Engine Compartment Left)
1L		
2A	30	Engine Room Main Wire and Driver Side J/B (Lower Finish Panel)
2B		
2C		
2D		
2F	30	Instrument Panel Wire and Driver Side J/B (Lower Finish Panel)
2H	31	
2I		
2M	30	
3A	36 (*2)	Instrument Panel Wire and Passenger Side J/B (Instrument Panel Brace RH)
	37 (*3)	
3B	36 (*2)	
3C	37 (*3)	

: Connector Joining Wire Harness and Wire Harness

Code	See Page	Joining Wire Harness and Wire Harness (Connector Location)
EB1	54 (3MZ–FE)	Engine Wire and Sensor Wire (Left Bank of Cylinder Head)
IC1	56 (C/P)	Instrument Panel Wire and Floor No.1 Wire (Left Kick Panel)
	58 (*1)	
ID1	56 (C/P)	Engine Room Main Wire and Floor No.1 Wire (Left Side of Driver Side J/B)
	58 (*1)	
IG2	56 (C/P)	Engine Room Main Wire and Instrument Panel Wire (Behind the Radio and Player)
	58 (*1)	
IG5	56 (C/P)	
	58 (*1)	
IG6	56 (C/P)	
	58 (*1)	
IG7	56 (C/P)	
	58 (*1)	
IG8	56 (C/P)	
	58 (*1)	
IJ1	57 (C/P)	Instrument Panel Wire and Instrument Panel Wire (Instrument Panel Reinforcement RH)
	59 (*1)	
IK1	57 (C/P)	
	59 (*1)	
IM1	57 (C/P)	Engine Wire and Instrument Panel Wire (Behind the Glove Box)
	59 (*1)	
IM2	57 (C/P)	
	59 (*1)	

* 1 : Convertible * 2 : C/P, Convertible w/ VSC * 3 : Convertible w/o VSC

▽ : **Ground Points**

Code	See Page	Ground Points Location
EC	54 (3MZ–FE)	Left Fender
ED		
EE	54 (3MZ–FE)	Right Side of Cylinder Head
EF	54 (3MZ–FE)	Left Side of Cylinder Head
IJ	56 (C/P)	Instrument Panel Brace LH
	58 (*1)	
IM	56 (C/P)	Instrument Panel Reinforcement RH
	58 (*1)	
IP	56 (C/P)	Left Kick Panel
BR	60 (C/P)	Left Center Pillar
BV	61 (*1)	Front Side of Rear Quarter Panel LH

* 1 : Convertible * 2 : C/P, Convertible w/ VSC * 3 : Convertible w/o VSC

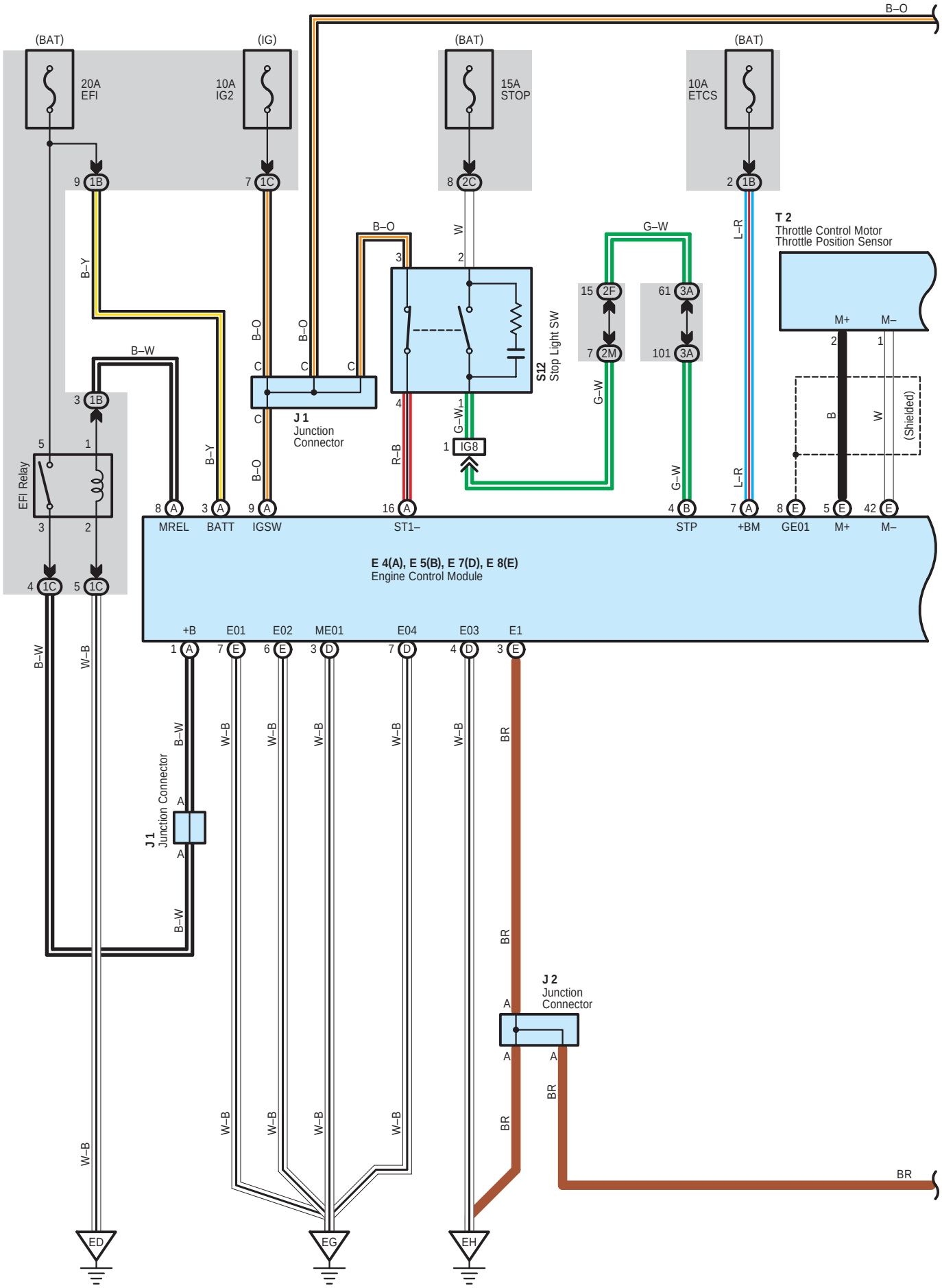
(BAT)
20A
EFI
(IG)
10A
IG2
(BAT)
15A
STOP
(BAT)
10A
ETCS
B–O
B–Y
B–W
B–O
B–O
W
G–W
L–R
T 2
Throttle Control Motor
Throttle Position Sensor
M+
M–
(Shielded)
S12
Stop Light SW
J 1
Junction Connector
EFI Relay
G–W
R–B
G–W
G–W
L–R
MREL
BATT
IGSW
ST1–
STP
+BM
GE01
M+
M–
E 4(A), E 5(B), E 7(D), E 8(E)
Engine Control Module
+B
E01
E02
ME01
E04
E03
E1
B–W
W–B
BR
J 1
Junction Connector
J 2
Junction Connector
ED
EG
EH

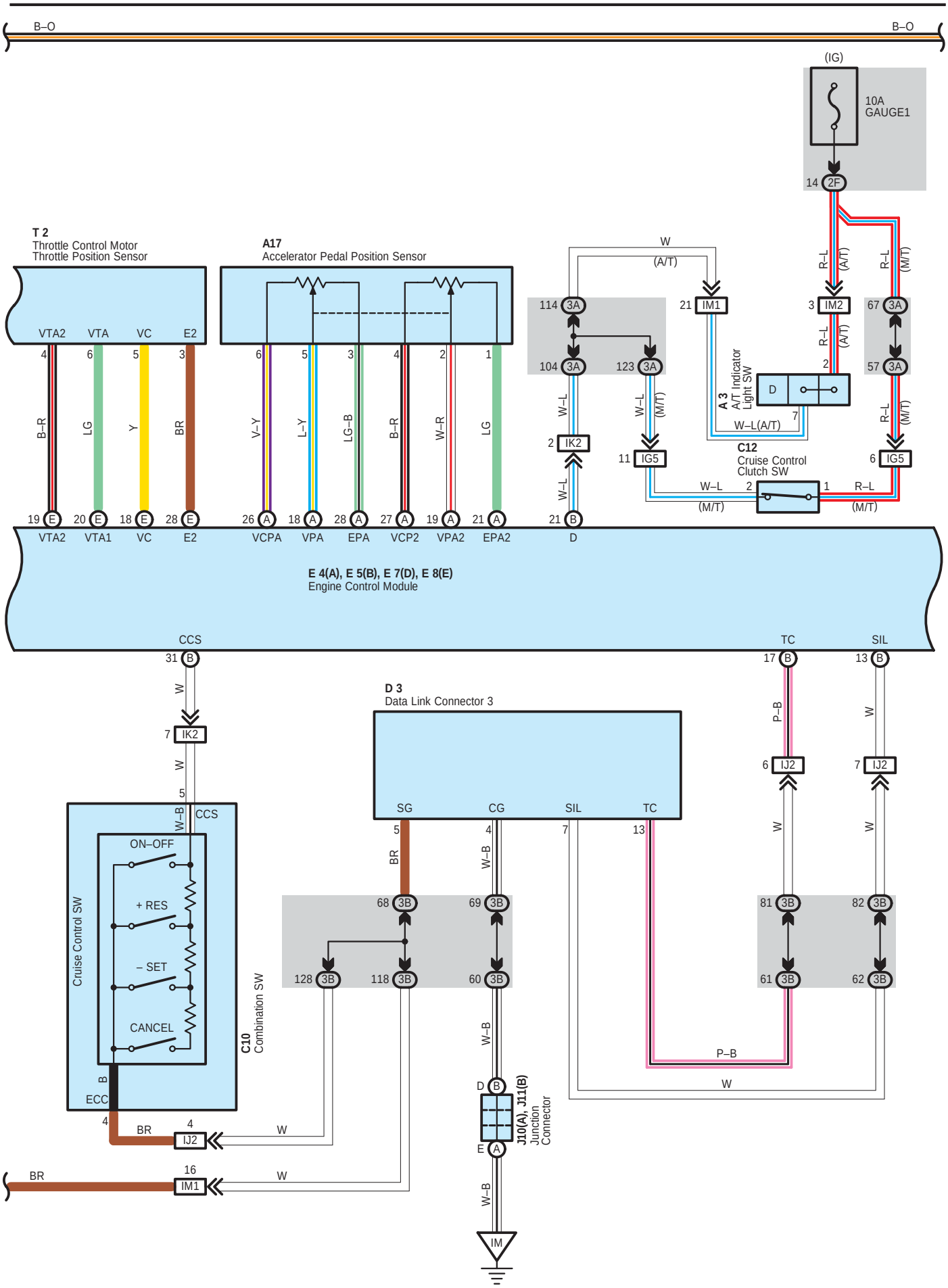
B–O
B–O
(IG)
10A
GAUGE1
14 2F
T 2
Throttle Control Motor
Throttle Position Sensor
A17
Accelerator Pedal Position Sensor
VTA2 VTA VC E2
B–R LG Y BR
V–Y L–Y LG–B B–R W–R LG
W
(A/T)
114 3A
104 3A
123 3A
21 IM1
3 IM2
67 3A
57 3A
R–L (A/T)
R–L (M/T)
W–L
W–L (M/T)
2 IK2
11 IG5
6 IG5
A 3
A/T Indicator
Light SW
D
W–L(A/T)
C12
Cruise Control
Clutch SW
W–L (M/T)
R–L (M/T)
19 E 20 E 18 E 28 E
VTA2 VTA1 VC E2
26 A 18 A 28 A 27 A 19 A 21 A
VCPA VPA EPA VCP2 VPA2 EPA2
21 B
D
E 4(A), E 5(B), E 7(D), E 8(E)
Engine Control Module
CCS
31 B
7 IK2
W–B
CCS
ON–OFF
+ RES
– SET
CANCEL
Cruise Control SW
C10
Combination SW
B
ECC
4
BR
4 IJ2
W
16 IM1
D 3
Data Link Connector 3
SG CG SIL TC
5 4 7 13
BR
W–B
68 3B 69 3B
128 3B 118 3B 60 3B
D B
E A
J10(A), J11(B)
Junction
Connector
IM
TC SIL
17 B 13 B
P–B
6 IJ2 7 IJ2
81 3B 82 3B
61 3B 62 3B
P–B
W

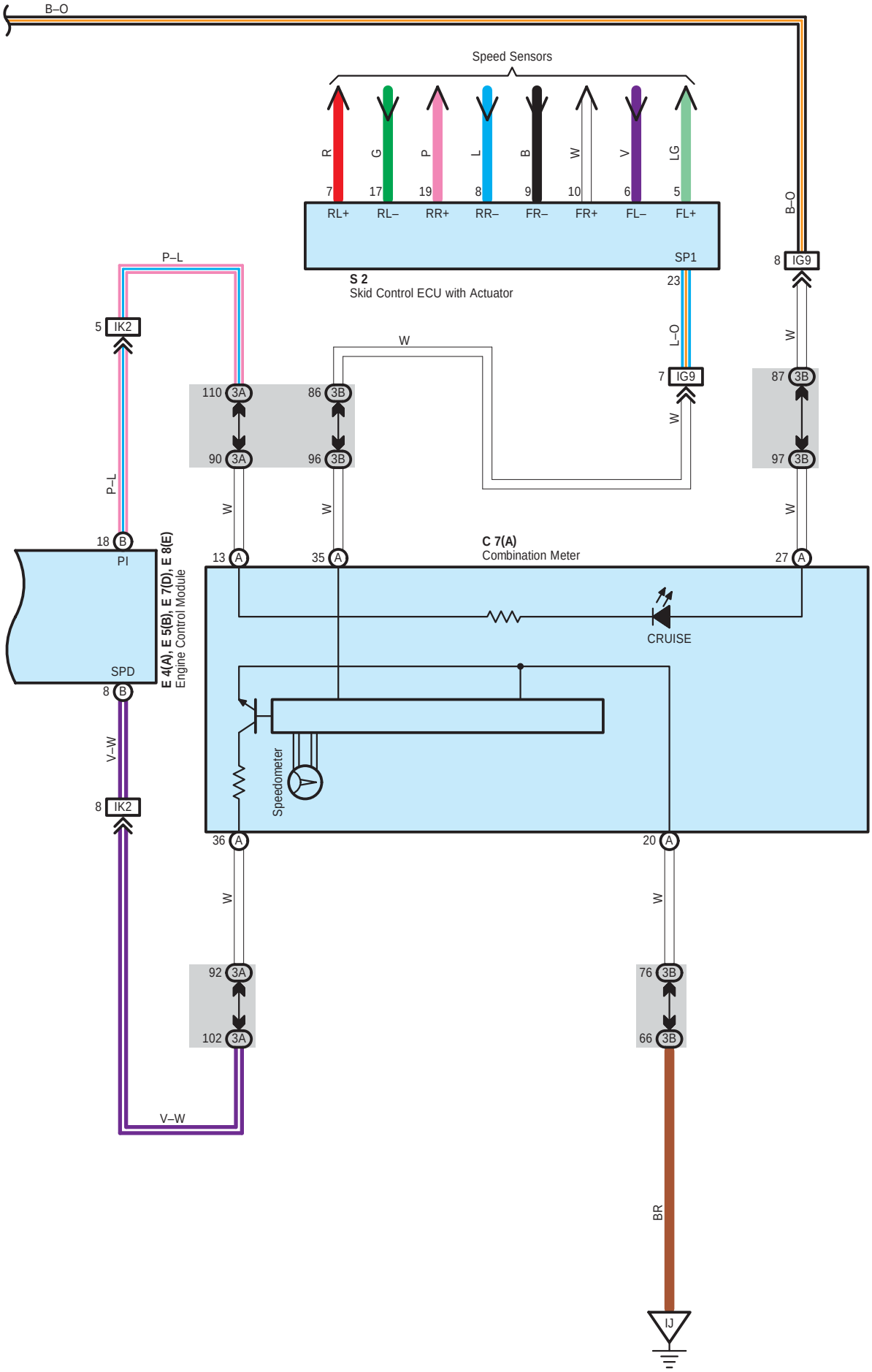
B–O
Speed Sensors
R
G
P
L
B
W
V
LG
7
17
19
8
9
10
6
5
RL+
RL–
RR+
RR–
FR–
FR+
FL–
FL+
SP1
S 2
Skid Control ECU with Actuator
23
L–O
B–O
8 IG9
W
P–L
5 IK2
W
110 3A
86 3B
7 IG9
87 3B
90 3A
96 3B
97 3B
P–L
W
W
W
18 B
PI
13 A
35 A
C 7(A)
Combination Meter
27 A
E 4(A), E 5(B), E 7(D), E 8(E)
Engine Control Module
CRUISE
SPD
8 B
V–W
Speedometer
8 IK2
36 A
20 A
W
W
92 3A
76 3B
102 3A
66 3B
V–W
BR
IJ

System Outline

The cruise control system is a constant vehicle speed controller in which control of the switch on the instrument panel makes it possible to automatically adjust the opening of the engine throttle valve without depressing of the accel. pedal.

1. Set Operation

When the ON–OFF SW is turned on, the system starts preparations necessary for the cruise control and turns on the indicator light in the combination meter.

2. Set Speed Control

When the – SET SW is operated with the cruise control SW turned on during travelling, the constant vehicle speed is controlled.

3. Coast Control

When the – SET SW is kept turned on during cruise control travelling, the engine control module controls the throttle valve to decelerate the vehicle. Every time the – SET SW is turned on instantaneously, the vehicle speed is decelerated approximately 1.6 km/h.

4. Accel Control

When the + RES SW is kept turned on during cruise control travelling, the engine control module controls the throttle valve to accelerate the vehicle. Every time the + RES SW is turned on instantaneously, the vehicle speed is accelerated approximately 1.6 km/h.

5. Resume Control

When the vehicle speed is within the low speed limit (Approximately 40 km/h, 25 mph) if the cruise control is cancelled, use of the + RES SW accelerates the vehicle to the speed level used before canceling the cruise control.

6. Manual Cancel Mechanism

If any of the following signals is input during cruise control travelling, the cruise control is cancelled.

∗ The stop light SW is turned on.
∗ The CANCEL SW is turned on.
∗ The ON–OFF SW is turned off.
∗ The clutch pedla depressed (M/T).
∗ Gear is shifted from D position to N position. (A/T)
∗ Gear is shifted from 4 to 3 in S mode.

7. Auto Cancel Function

If any of the following conditions is encountered, the cruise control is automatically cancelled.

∗ The stop light SW wiring is faulty or short–circuited.
∗ The vehicle speed signal is faulty.
∗ The electronically controlled throttle malfunctions.

○ : Parts Location

Code		See Page	Code		See Page	Code		See Page
A3		42 (2AZ–FE)	E4	A	44 (C/P)	J10	A	45 (C/P)
A17		44 (C/P)	E5	B	44 (C/P)	J11	B	45 (C/P)
C7	A	44 (C/P)	E7	D	44 (C/P)	S2		43 (2AZ–FE)
C10		44 (C/P)	E8	E	44 (C/P)	S12		45 (C/P)
C12		44 (C/P)	J1		45 (C/P)	T2		43 (2AZ–FE)
D3		44 (C/P)	J2		45 (C/P)			

: Junction Block and Wire Harness Connector

Code	See Page	Junction Block and Wire Harness (Connector Location)
1B	27	Engine Room Main Wire and Engine Room J/B (Engine Compartment Left)
1C		
2C	30	Engine Room Main Wire and Driver Side J/B (Lower Finish Panel)
2F	30	Instrument Panel Wire and Driver Side J/B (Lower Finish Panel)
2M		
3A	36 (*2)	Instrument Panel Wire and Passenger Side J/B (Instrument Panel Brace RH)
3B		

* 1 : Convertible * 2 : C/P, Convertible w/ VSC * 3 : Convertible w/o VSC

: Connector Joining Wire Harness and Wire Harness

Code	See Page	Joining Wire Harness and Wire Harness (Connector Location)
IG5	56 (C/P)	Engine Room Main Wire and Instrument Panel Wire (Behind the Radio and Player)
IG8		
IG9		
IJ2	57 (C/P)	Instrument Panel Wire and Instrument Panel Wire (Instrument Panel Reinforcement RH)
IK2		
IM1	57 (C/P)	Engine Wire and Instrument Panel Wire (Behind the Glove Box)
IM2		

: Ground Points

Code	See Page	Ground Points Location
ED	55 (2AZ–FE)	Left Fender
EG	55 (2AZ–FE)	Intake Side of Cylinder Block
EH	55 (2AZ–FE)	Left Side of Cylinder Head
IJ	56 (C/P)	Instrument Panel Brace LH
IM	56 (C/P)	Instrument Panel Reinforcement RH

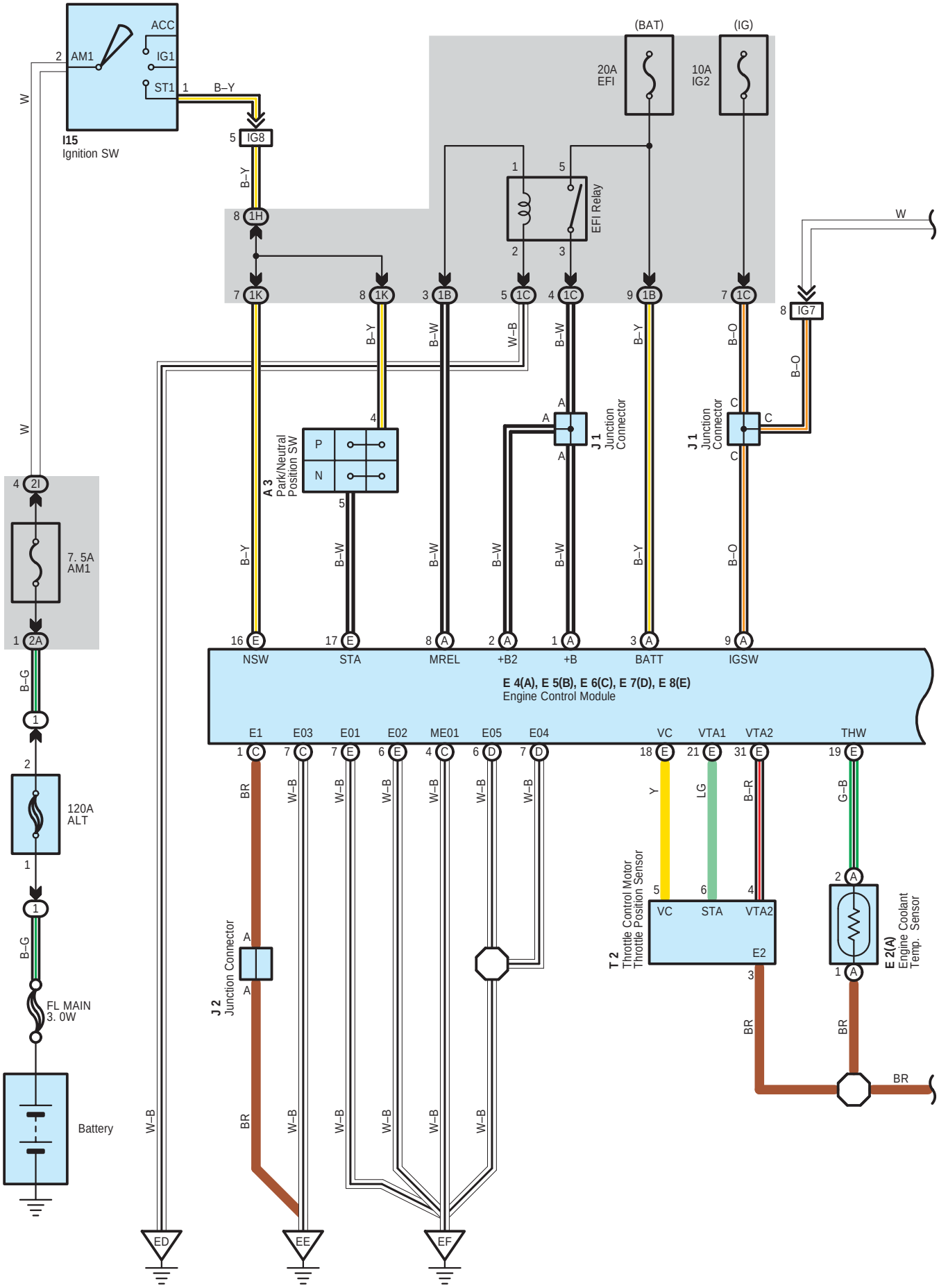
I15
Ignition SW
ACC
IG1
ST1
AM1
B–Y
IG8
1H
1K
1B
1C
(BAT)
(IG)
20A
EFI
10A
IG2
EFI Relay
IG7
W
B–Y
B–W
W–B
B–O
A 3
Park/Neutral
Position SW
P
N
J 1
Junction
Connector
2I
7. 5A
AM1
2A
B–G
120A
ALT
FL MAIN
3. 0W
Battery
NSW
STA
MREL
+B2
+B
BATT
IGSW
E 4(A), E 5(B), E 6(C), E 7(D), E 8(E)
Engine Control Module
E1
E03
E01
E02
ME01
E05
E04
VC
VTA1
VTA2
THW
BR
Y
LG
B–R
G–B
J 2
Junction Connector
T 2
Throttle Control Motor
Throttle Position Sensor
STA
E2
E 2(A)
Engine Coolant
Temp. Sensor
ED
EE
EF

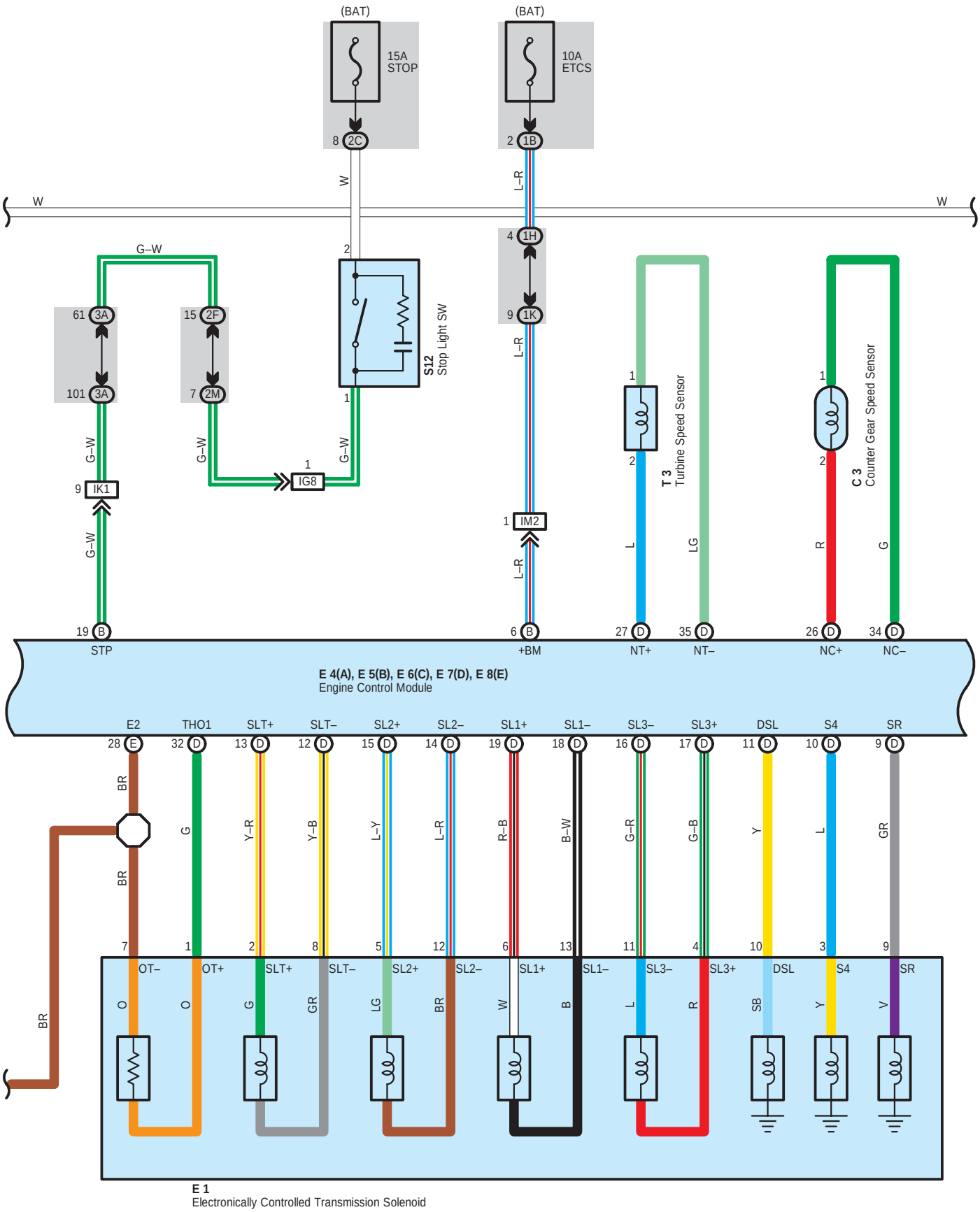
(BAT)
15A
STOP
(BAT)
10A
ETCS
8 2C
2 1B
W
L–R
W
W
4 1H
G–W
2
61 3A
15 2F
9 1K
S12
Stop Light SW
101 3A
7 2M
1
L–R
1
T 3
Turbine Speed Sensor
1
C 3
Counter Gear Speed Sensor
G–W
G–W
G–W
1
IG8
9 IK1
1 IM2
L
LG
R
G
G–W
L–R
19 B
STP
6 B
+BM
27 D
NT+
35 D
NT–
26 D
NC+
34 D
NC–
E 4(A), E 5(B), E 6(C), E 7(D), E 8(E)
Engine Control Module
E2
THO1
SLT+
SLT–
SL2+
SL2–
SL1+
SL1–
SL3–
SL3+
DSL
S4
SR
28 E
32 D
13 D
12 D
15 D
14 D
19 D
18 D
16 D
17 D
11 D
10 D
9 D
BR
BR
G
Y–R
Y–B
L–Y
L–R
R–B
B–W
G–R
G–B
Y
L
GR
7
1
2
8
5
12
6
13
11
4
10
3
9
OT–
OT+
SLT+
SLT–
SL2+
SL2–
SL1+
SL1–
SL3–
SL3+
DSL
S4
SR
BR
O
O
G
GR
LG
BR
W
B
L
R
SB
Y
V
E 1
Electronically Controlled Transmission Solenoid

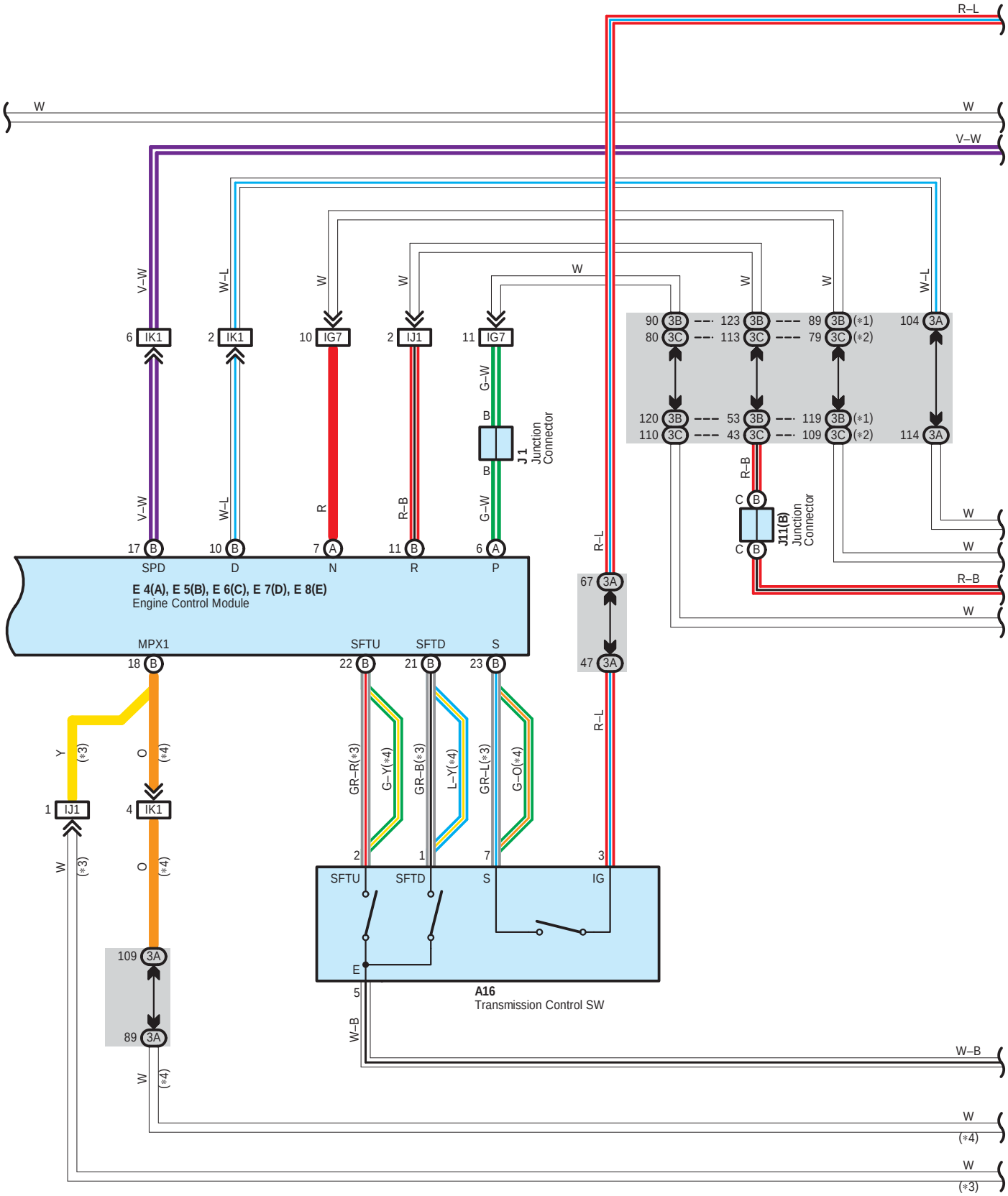
R–L
W
W
V–W
V–W
W–L
W
W
W
W
W–L
6 IK1
2 IK1
10 IG7
2 IJ1
11 IG7
G–W
B
J 1
Junction
Connector
B
V–W
W–L
R
R–B
G–W
17 B
10 B
7 A
11 B
6 A
SPD
D
N
R
P
E 4(A), E 5(B), E 6(C), E 7(D), E 8(E)
Engine Control Module
MPX1
SFTU
SFTD
S
18 B
22 B
21 B
23 B
90 3B
80 3C
123 3B
113 3C
89 3B (*1)
79 3C (*2)
104 3A
120 3B
110 3C
53 3B
43 3C
119 3B (*1)
109 3C (*2)
114 3A
R–B
C B
J11(B)
Junction
Connector
C B
W
W
R–B
W
R–L
67 3A
47 3A
R–L
Y (*3)
O (*4)
1 IJ1
4 IK1
W (*3)
O (*4)
GR–R(*3)
G–Y(*4)
GR–B(*3)
L–Y(*4)
GR–L(*3)
G–O(*4)
2
1
7
3
SFTU
SFTD
S
IG
E
5
A16
Transmission Control SW
W–B
109 3A
89 3A
W (*4)
W–B
W
(*4)
W
(*3)

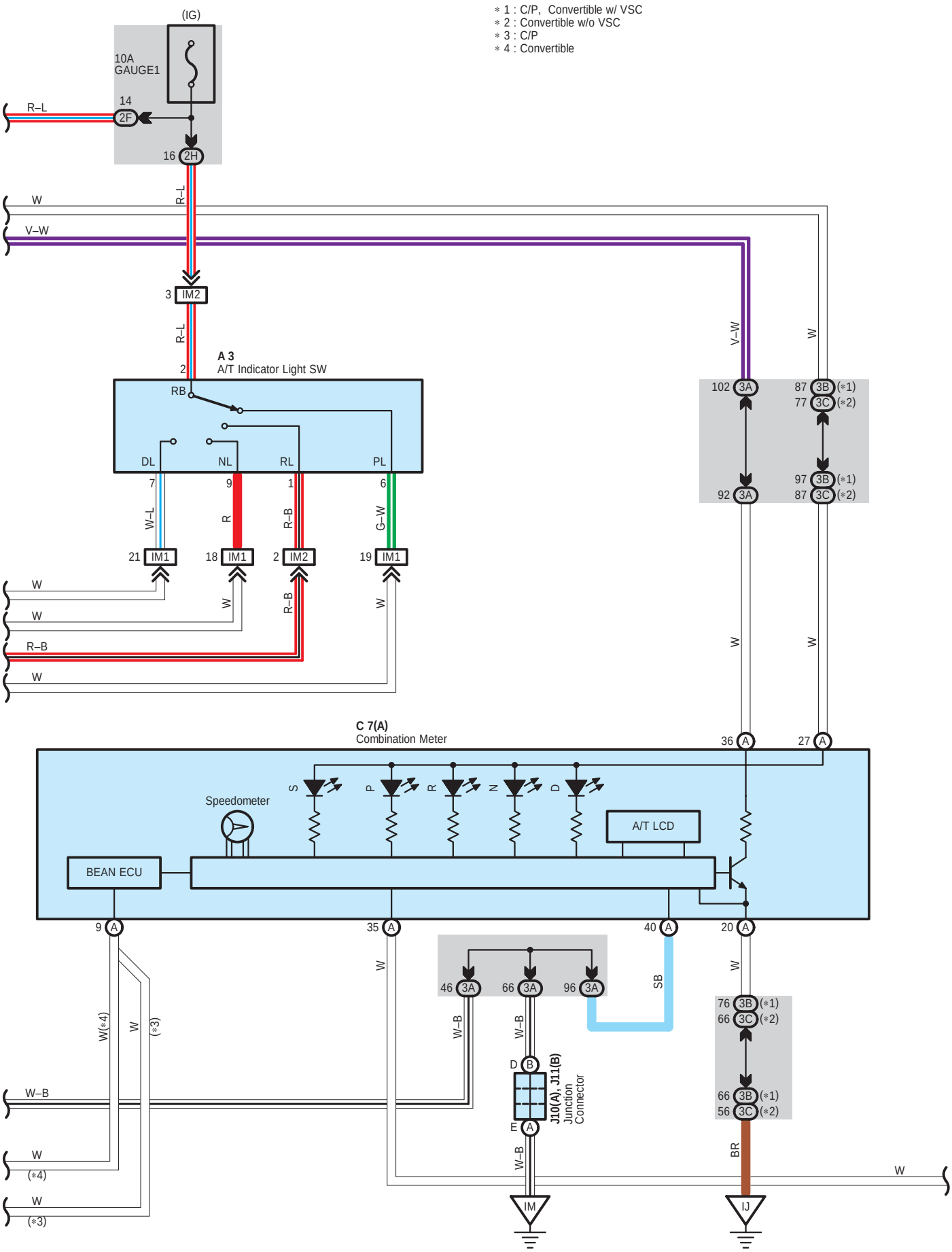

＊1 : C/P, Convertible w/ VSC
＊2 : Convertible w/o VSC
＊3 : C/P
＊4 : Convertible

∗ 1 : C/P, Convertible w/ VSC
∗ 2 : Convertible w/o VSC
∗ 5 : w/ VSC
∗ 6 : w/o VSC

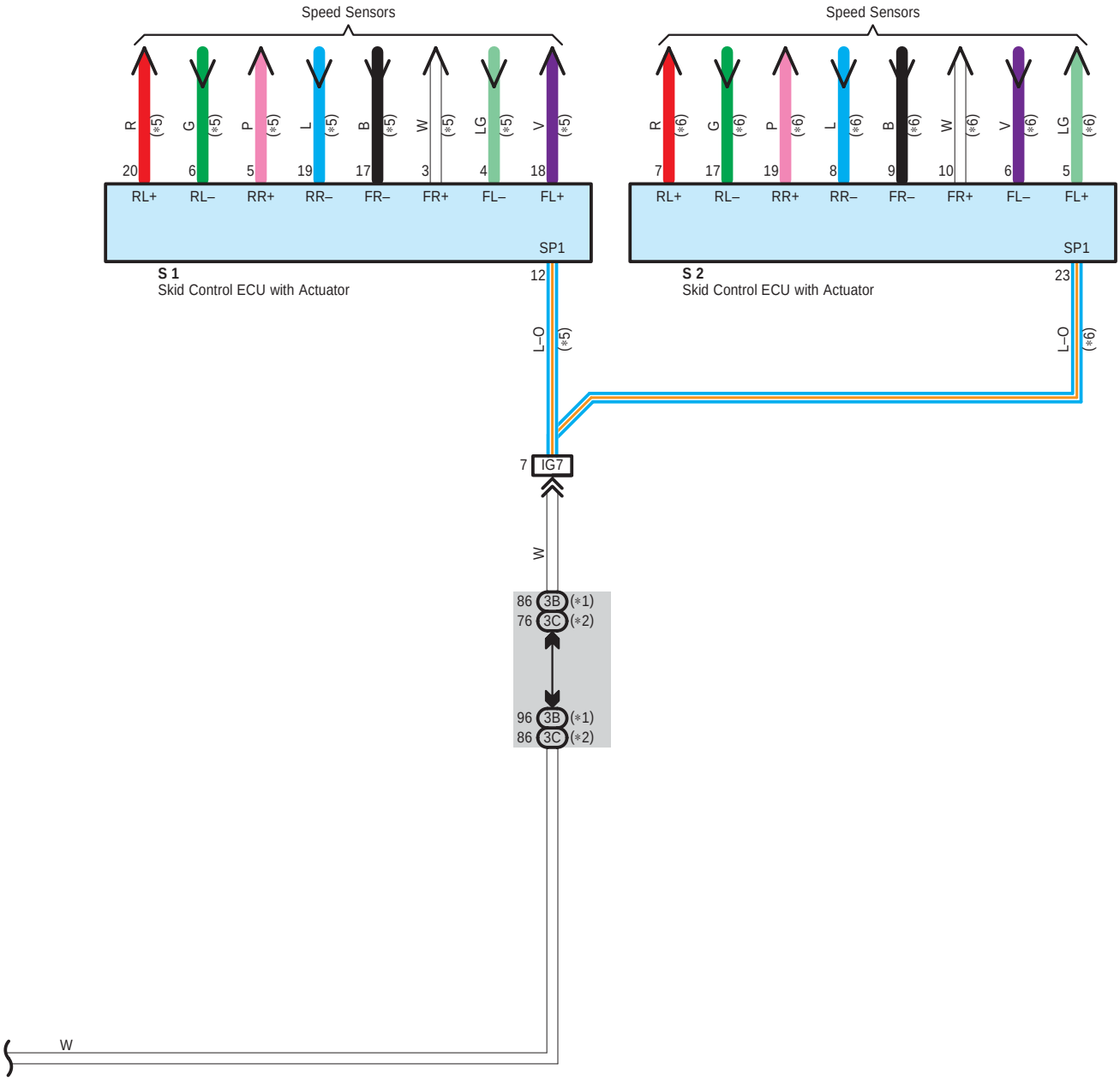

System Outline

Previous automatic transaxle have selected each gear shift using mechanically controlled throttle hydraulic pressure, governor hydraulic pressure and lock–up hydraulic pressure. The electronically controlled transmission, however, electrically controls the line pressure, throttle pressure, lock–up pressure and accumulator pressure etc. through the solenoid valve. The electronically controlled transmission is a system which precisely control gear shift timing and lock–up timing in response to the vehicle's driving conditions and the engine condition detected by various sensors. It makes smooth driving possible by shift selection for each gear which is the most appropriate to the driving conditions at that time, and by preventing dowing, squat and gear shift shock when starting off.

1. Gear Shift Operation

When driving, the engine warm up condition is input as a signal to TERMINAL THW of the engine control module from the engine coolant temp. sensor and the vehicle speed signal is input to TERMINAL SPD of the engine control module. At the same time, the throttle valve opening signal from the throttle position sensor is input to TERMINALS VTA1 and VTA2 of the engine control module as throttle angle signal.
Based on these signals, the engine control module selects the best shift position for the driving conditions and sends current to the electronically controlled transmission solenoid.

2. Lock–Up Operation

When each signal makes engine control module recognize that LOCK–UP condition is satisfied, the current flows from engine control module TERMINAL DSL to electronically controlled transmission solenoid TERMINAL 10. At the same time, the current flows engine control module TERMINAL SL1+ to electronically controlled transmission solenoid TERMINAL 6 and from TERMINAL 13 to engine control module TERMINAL SL1–. This works LOCK–UP solenoid to perform LOCK–UP operation.

3. Stop Light SW Circuit

If the brake pedal is depressed (Stop Light SW on) when driving in lock–up condition, a signal is input to TERMINAL STP of the engine control module. The engine control module operates and cuts the current to the solenoid to release lock–up.

4. Sequential Shift Operation

With the sequential shift function, the manual shift lever becomes available by setting the shift lever to the S position, and the S and range display indicators appear in the combination meter. Any desired range can be selected by shifting up or down the shift lever.

: Parts Location

Code		See Page	Code		See Page	Code		See Page
A3		40 (3MZ–FE)	E6	C	44 (C/P)	J10	A	45 (C/P)
A16		44 (C/P)			46 (*1)			47 (*1)
		46 (*1)	E7	D	44 (C/P)	J11	B	45 (C/P)
C3		40 (3MZ–FE)			46 (*1)			47 (*1)
C7	A	44 (C/P)	E8	E	44 (C/P)	S1		41 (3MZ–FE)
		46 (*1)			46 (*1)	S2		41 (3MZ–FE)
E1		40 (3MZ–FE)	I15		45 (C/P)	S12		45 (C/P)
E2	A	40 (3MZ–FE)			47 (*1)			47 (*1)
E4	A	44 (C/P)	J1		45 (C/P)	T2		41 (3MZ–FE)
		46 (*1)			47 (*1)	T3		41 (3MZ–FE)
E5	B	44 (C/P)	J2		45 (C/P)			
		46 (*1)			47 (*1)			

: Relay Blocks

Code	See Page	Relay Blocks (Relay Block Location)
1	24	Engine Room R/B (Engine Compartment Left)

* 1 : Convertible * 2 : C/P, Convertible w/ VSC * 3 : Convertible w/o VSC

: Junction Block and Wire Harness Connector

Code	See Page	Junction Block and Wire Harness (Connector Location)
1B	27	Engine Room Main Wire and Engine Room J/B (Engine Compartment Left)
1C		
1H		
1K	27	Engine Wire and Engine Room J/B (Engine Compartment Left)
2A	30	Engine Room Main Wire and Driver Side J/B (Lower Finish Panel)
2C		
2F	30	Instrument Panel Wire and Driver Side J/B (Lower Finish Panel)
2H	31	
2I		
2M	30	
3A	36 (*2)	Instrument Panel Wire and Passenger Side J/B (Instrument Panel Brace RH)
	37 (*3)	
3B	36 (*2)	
3C	37 (*3)	

: Connector Joining Wire Harness and Wire Harness

Code	See Page	Joining Wire Harness and Wire Harness (Connector Location)
IG7	56 (C/P)	Engine Room Main Wire and Instrument Panel Wire (Behind the Radio and Player)
	58 (*1)	
IG8	56 (C/P)	
	58 (*1)	
IJ1	57 (C/P)	Instrument Panel Wire and Instrument Panel Wire (Instrument Panel Reinforcement RH)
	59 (*1)	
IK1	57 (C/P)	
	59 (*1)	
IM1	57 (C/P)	Engine Wire and Instrument Panel Wire (Behind the Glove Box)
	59 (*1)	
IM2	57 (C/P)	
	59 (*1)	

: Ground Points

Code	See Page	Ground Points Location
ED	54 (3MZ–FE)	Left Fender
EE	54 (3MZ–FE)	Right Side of Cylinder Head
EF	54 (3MZ–FE)	Left Side of Cylinder Head
IJ	56 (C/P)	Instrument Panel Brace LH
	58 (*1)	
IM	56 (C/P)	Instrument Panel Reinforcement RH
	58 (*1)	

* 1 : Convertible * 2 : C/P, Convertible w/ VSC * 3 : Convertible w/o VSC

ECT and A/T Indicator for 2AZ–FE

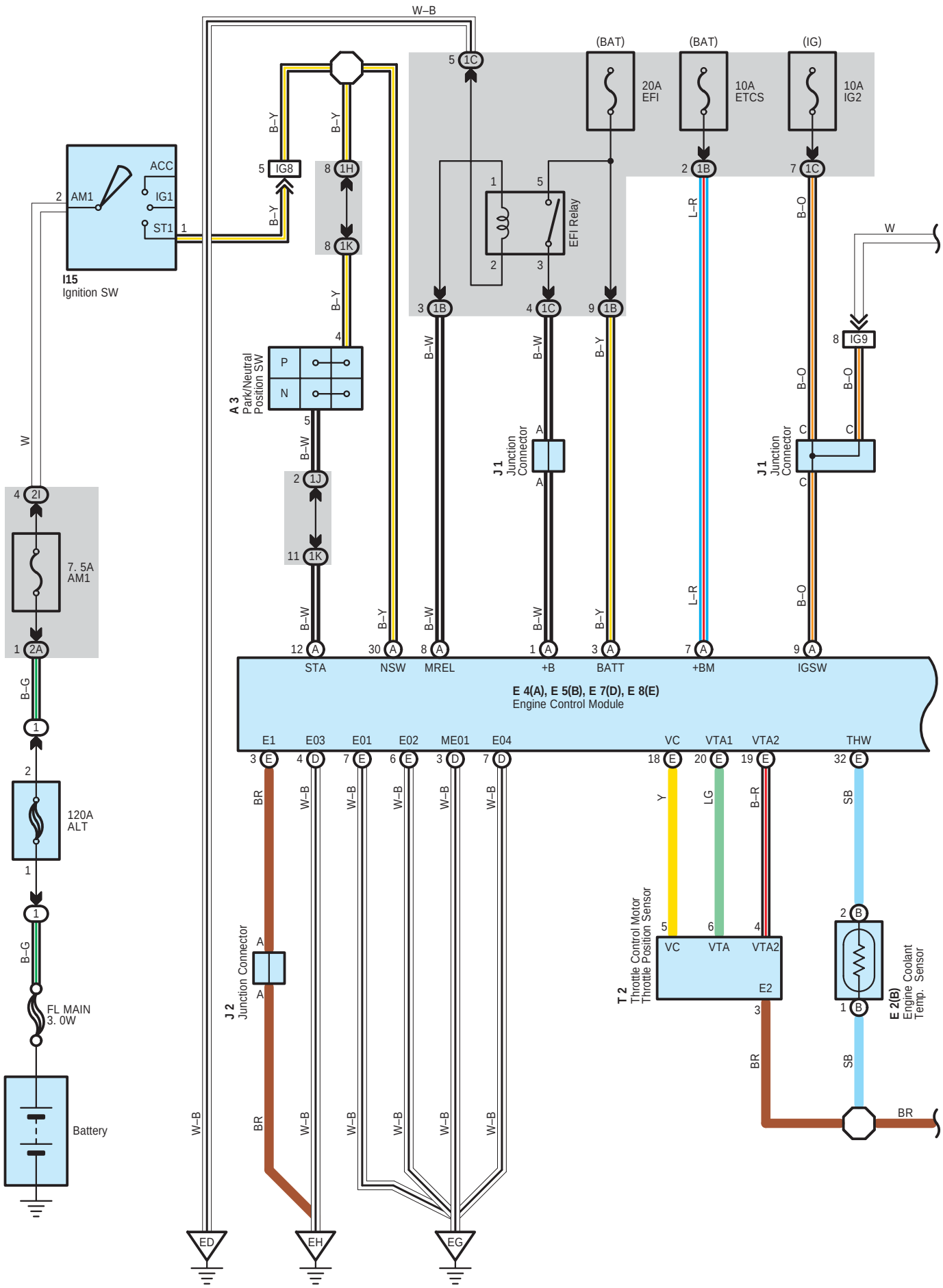

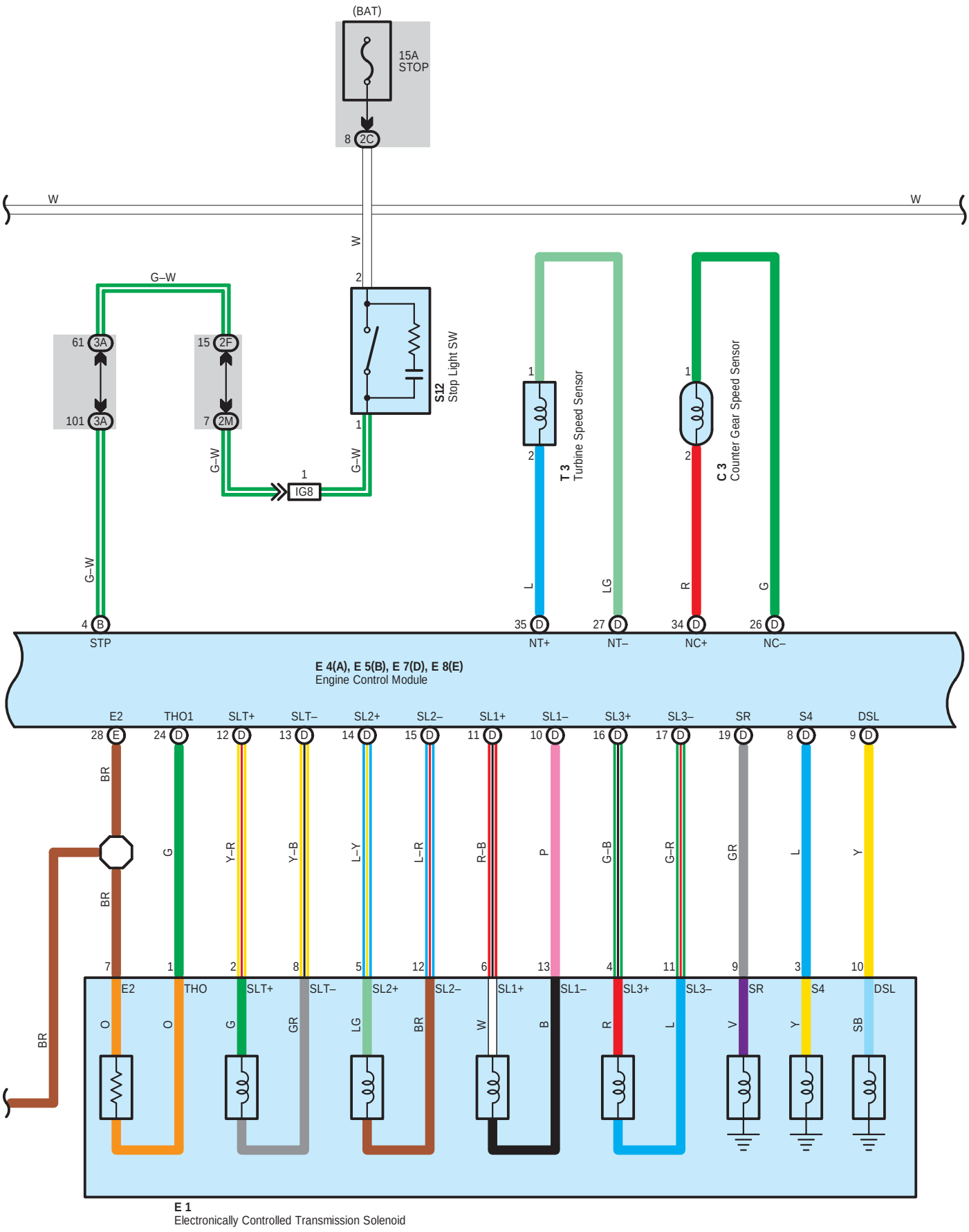
(BAT)
15A
STOP
8 2C
W
W
W
2
G–W
61 3A
101 3A
15 2F
7 2M
G–W
1
IG8
G–W
1
S12
Stop Light SW
1
2
T 3
Turbine Speed Sensor
1
2
C 3
Counter Gear Speed Sensor
G–W
L
LG
R
G
4 B
STP
35 D
NT+
27 D
NT–
34 D
NC+
26 D
NC–
E 4(A), E 5(B), E 7(D), E 8(E)
Engine Control Module
E2
THO1
SLT+
SLT–
SL2+
SL2–
SL1+
SL1–
SL3+
SL3–
SR
S4
DSL
28 E
24 D
12 D
13 D
14 D
15 D
11 D
10 D
16 D
17 D
19 D
8 D
9 D
BR
BR
G
Y–R
Y–B
L–Y
L–R
R–B
P
G–B
G–R
GR
L
Y
7
1
2
8
5
12
6
13
4
11
9
3
10
BR
E2
THO
SLT+
SLT–
SL2+
SL2–
SL1+
SL1–
SL3+
SL3–
SR
S4
DSL
O
O
G
GR
LG
BR
W
B
R
L
V
Y
SB
E 1
Electronically Controlled Transmission Solenoid

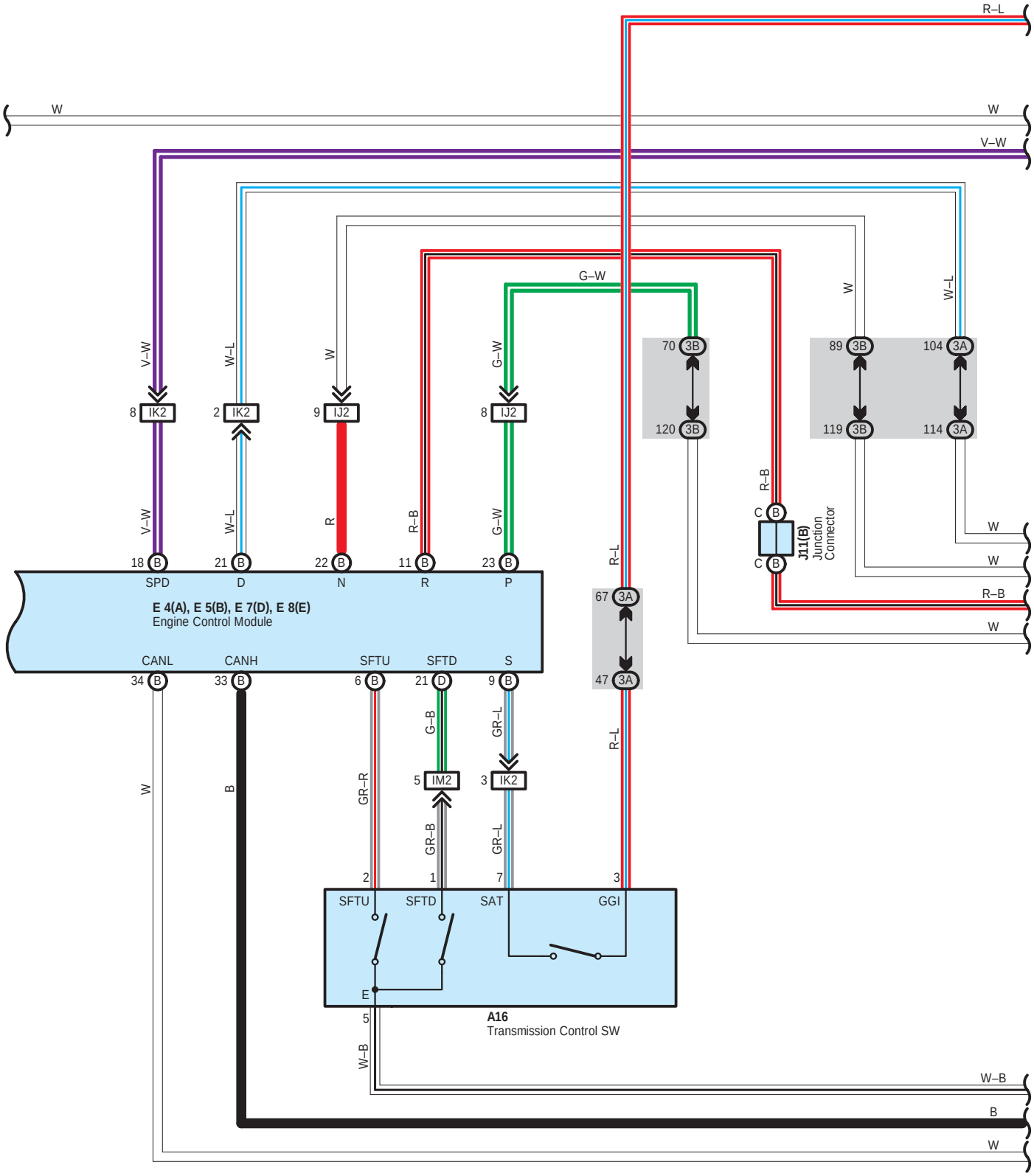
R–L
W
W
V–W
G–W
W
W–L
V–W
W–L
W
G–W
8 IK2
2 IK2
9 IJ2
8 IJ2
70 3B
120 3B
89 3B
119 3B
104 3A
114 3A
R–B
C B
C B
J11(B)
Junction
Connector
V–W
W–L
R
R–B
G–W
R–L
W
W
R–B
W
18 B
21 B
22 B
11 B
23 B
SPD
D
N
R
P
E 4(A), E 5(B), E 7(D), E 8(E)
Engine Control Module
67 3A
47 3A
CANL
CANH
SFTU
SFTD
S
34 B
33 B
6 B
21 D
9 B
G–B
GR–L
R–L
W
B
GR–R
5 IM2
3 IK2
GR–B
GR–L
2
1
7
3
SFTU
SFTD
SAT
GGI
E
5
A16
Transmission Control SW
W–B
W–B
B
W

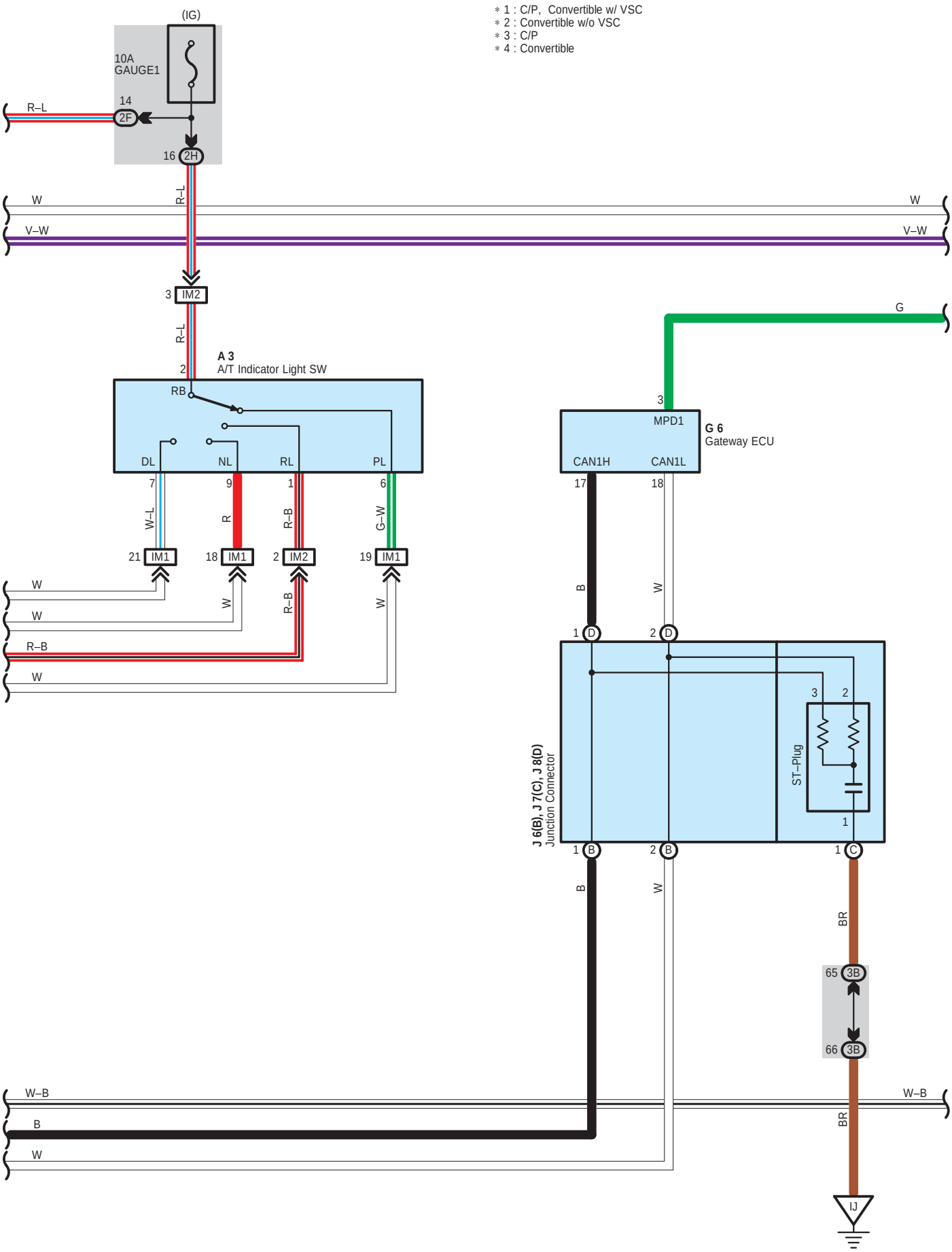
(IG)
10A
GAUGE1
14
2F
16
2H
R–L
W
V–W
3
IM2
A 3
A/T Indicator Light SW
2
RB
DL
NL
RL
PL
7
9
1
6
W–L
R
R–B
G–W
21
IM1
18
IM1
2
IM2
19
IM1
G
3
MPD1
G 6
Gateway ECU
CAN1H
CAN1L
17
18
B
1
D
2
D
J 6(B), J 7(C), J 8(D)
Junction Connector
ST–Plug
1
B
2
B
1
C
BR
65
3B
66
3B
W–B
IJ
＊1 : C/P, Convertible w/ VSC
＊2 : Convertible w/o VSC
＊3 : C/P
＊4 : Convertible

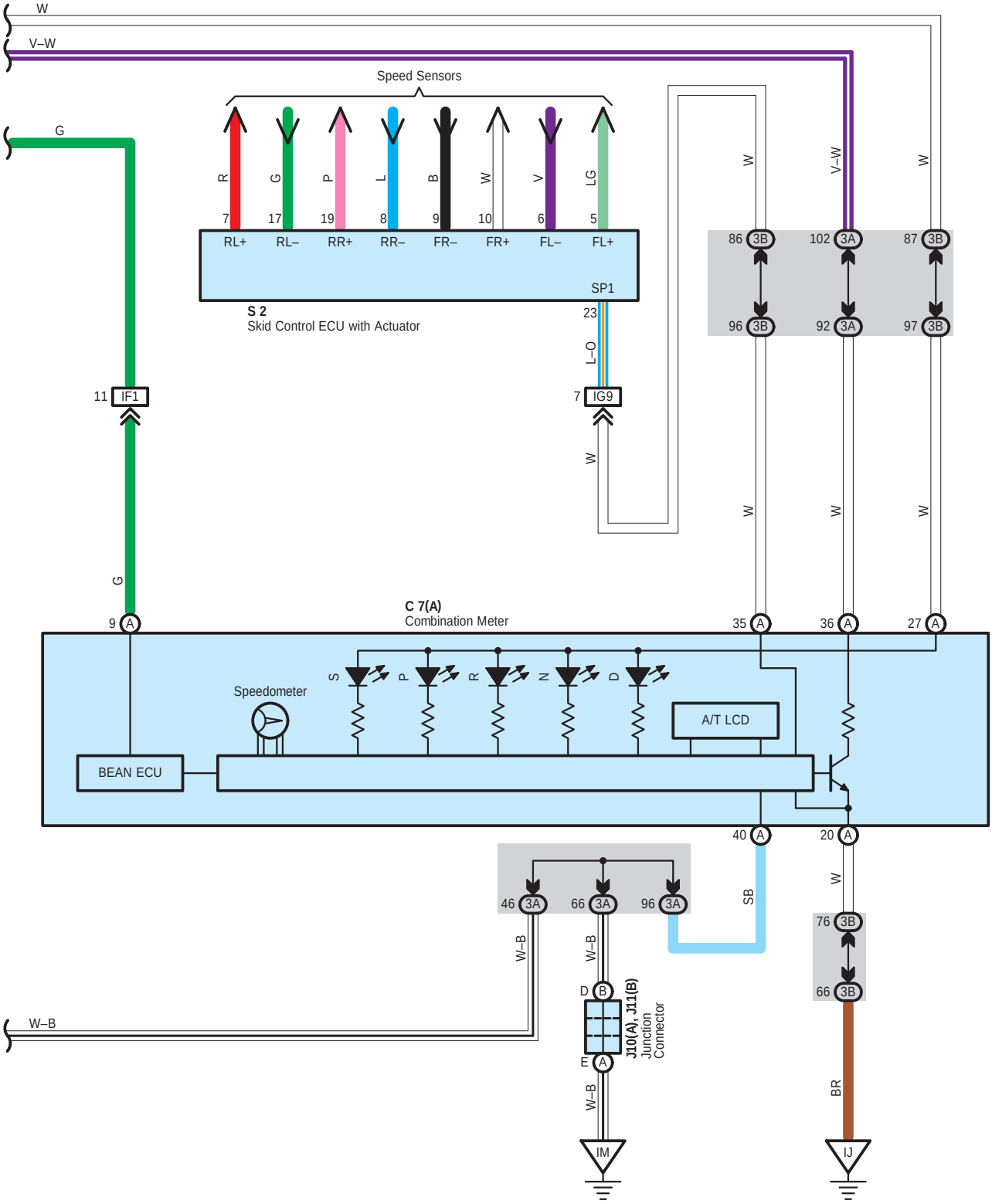
W
V–W
Speed Sensors
G
R
G
P
L
B
W
V
LG
7
17
19
8
9
10
6
5
RL+
RL–
RR+
RR–
FR–
FR+
FL–
FL+
SP1
S 2
Skid Control ECU with Actuator
23
L–O
11
IF1
7
IG9
W
V–W
W
86
3B
102
3A
87
3B
96
3B
92
3A
97
3B
W
W
W
G
9
A
C 7(A)
Combination Meter
35
A
36
A
27
A
S
P
R
N
D
Speedometer
A/T LCD
BEAN ECU
40
A
20
A
46
3A
66
3A
96
3A
SB
W
76
3B
66
3B
W–B
W–B
D
B
J10(A), J11(B)
Junction
Connector
E
A
W–B
W–B
BR
IM
IJ

System Outline

Previous automatic transaxle have selected each gear shift using mechanically controlled throttle hydraulic pressure, governor hydraulic pressure and lock–up hydraulic pressure. The electronically controlled transmission, however, electrically controls the line pressure, throttle pressure, lock–up pressure and accumulator pressure etc. through the solenoid valve. The electronically controlled transmission is a system which precisely control gear shift timing and lock–up timing in response to the vehicle's driving conditions and the engine condition detected by various sensors. It makes smooth driving possible by shift selection for each gear which is the most appropriate to the driving conditions at that time, and by preventing dowing, squat and gear shift shock when starting off.

1. Gear Shift Operation

When driving, the engine warm up condition is input as a signal to TERMINAL THW of the engine control module from the engine coolant temp. sensor and the vehicle speed signal is input to TERMINAL SPD of the engine control module. At the same time, the throttle valve opening signal from the throttle position sensor is input to TERMINALS VTA1 and VTA2 of the engine control module as throttle angle signal.
Based on these signals, the engine control module selects the best shift position for the driving conditions and sends current to the electronically controlled transmission solenoid.

2. Lock–Up Operation

When each signal makes engine control module recognize that LOCK–UP condition is satisfied, the current flows from engine control module TERMINAL DSL to electronically controlled transmission solenoid TERMINAL 10. At the same time, the current flows engine control module TERMINAL SL1+ to electronically controlled transmission solenoid TERMINAL 6 and from TERMINAL 13 to engine control module TERMINAL SL1–. This works LOCK–UP solenoid to perform LOCK–UP operation.

3. Stop Light SW Circuit

If the brake pedal is depressed (Stop Light SW on) when driving in lock–up condition, a signal is input to TERMINAL STP of the engine control module. The engine control module operates and cuts the current to the solenoid to release lock–up.

4. Sequential Shift Operation

With the sequential shift function, the manual shift lever becomes available by setting the shift lever to the S position, and the S and range display indicators appear in the combination meter. Any desired range can be selected by shifting up or down the shift lever.

: Parts Location

Code		See Page	Code		See Page	Code		See Page
A3		42 (2AZ–FE)	E7	D	44 (C/P)	J8	D	38, 45 (C/P)
A16		44 (C/P)	E8	E	44 (C/P)	J10	A	45 (C/P)
C3		42 (2AZ–FE)	G6		44 (C/P)	J11	B	45 (C/P)
C7	A	44 (C/P)	I15		45 (C/P)	S2		43 (2AZ–FE)
E1		42 (2AZ–FE)	J1		45 (C/P)	S12		45 (C/P)
E2	B	42 (2AZ–FE)	J2		45 (C/P)	T2		43 (2AZ–FE)
E4	A	44 (C/P)	J6	B	38, 45 (C/P)	T3		43 (2AZ–FE)
E5	B	44 (C/P)	J7	C	38, 45 (C/P)			

: Relay Blocks

Code	See Page	Relay Blocks (Relay Block Location)
1	24	Engine Room R/B (Engine Compartment Left)

: Junction Block and Wire Harness Connector

Code	See Page	Junction Block and Wire Harness (Connector Location)
1B	27	Engine Room Main Wire and Engine Room J/B (Engine Compartment Left)
1C		
1H		
1J		
1K	27	Engine Wire and Engine Room J/B (Engine Compartment Left)
2A	30	Engine Room Main Wire and Driver Side J/B (Lower Finish Panel)
2C		
2F	30	Instrument Panel Wire and Driver Side J/B (Lower Finish Panel)
2H	31	
2I		
2M	30	
3A	36 (*2)	Instrument Panel Wire and Passenger Side J/B (Instrument Panel Brace RH)
3B		

: Connector Joining Wire Harness and Wire Harness

Code	See Page	Joining Wire Harness and Wire Harness (Connector Location)
IF1	56 (C/P)	Instrument Panel Wire and Instrument Panel Wire (Instrument Panel Brace LH)
IG8	56 (C/P)	Engine Room Main Wire and Instrument Panel Wire (Behind the Radio and Player)
IG9		
IJ2	57 (C/P)	Instrument Panel Wire and Instrument Panel Wire (Instrument Panel Reinforcement RH)
IK2		
IM1	57 (C/P)	Engine Wire and Instrument Panel Wire (Behind the Glove Box)
IM2		

: Ground Points

Code	See Page	Ground Points Location
ED	55 (2AZ–FE)	Left Fender
EG	55 (2AZ–FE)	Intake Side of Cylinder Block
EH	55 (2AZ–FE)	Left Side of Cylinder Head
IJ	56 (C/P)	Instrument Panel Brace LH
IM	56 (C/P)	Instrument Panel Reinforcement RH

* 1 : Convertible * 2 : C/P, Convertible w/ VSC * 3 : Convertible w/o VSC

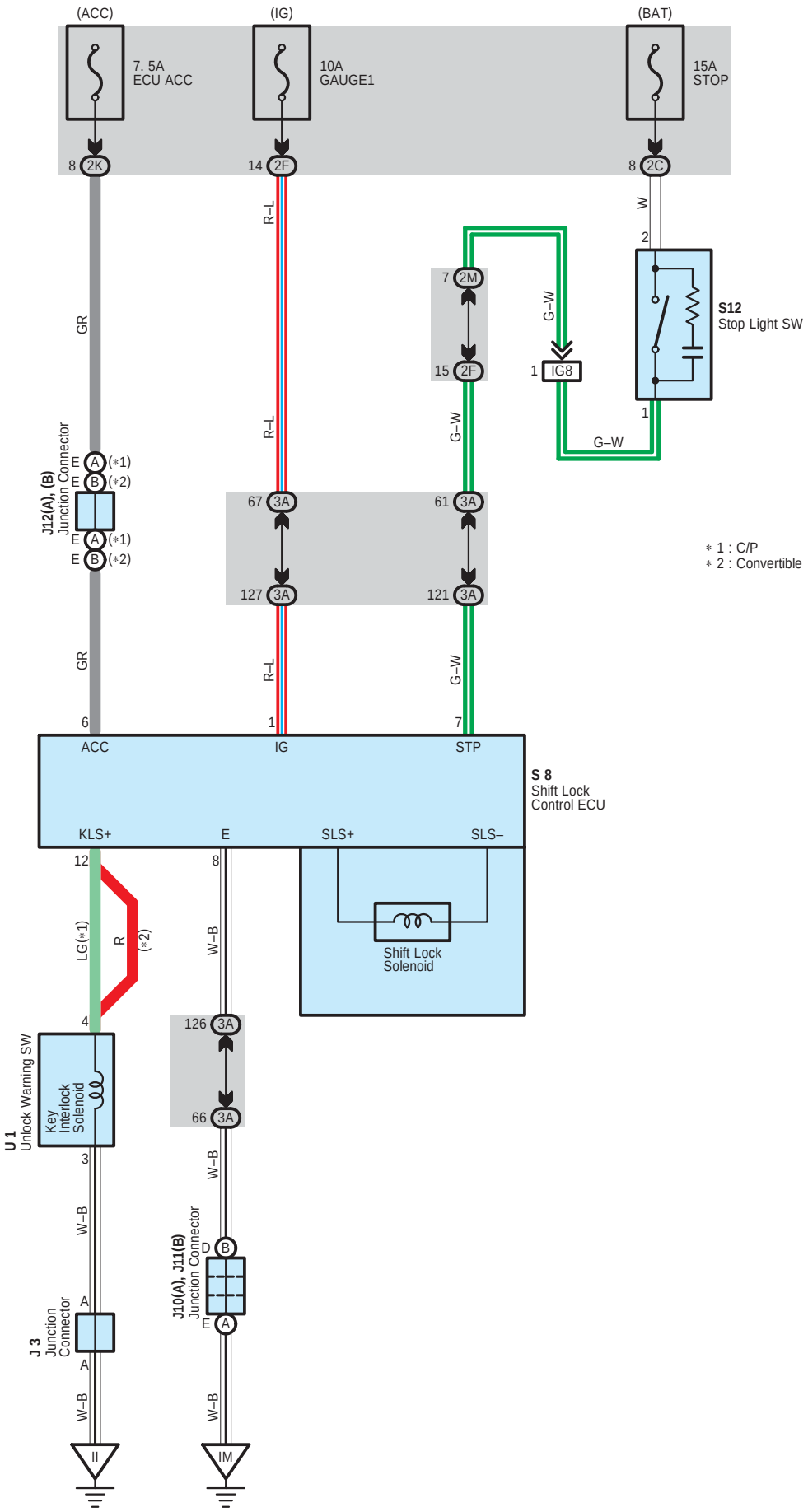
(ACC)
(IG)
(BAT)
7. 5A
ECU ACC
10A
GAUGE1
15A
STOP
8 2K
14 2F
8 2C
GR
R–L
W
2
7 2M
15 2F
G–W
1 IG8
S12
Stop Light SW
1
G–W
J12(A), (B)
Junction Connector
E A (*1)
E B (*2)
67 3A
61 3A
127 3A
121 3A
* 1 : C/P
* 2 : Convertible
6
1
7
ACC
IG
STP
S 8
Shift Lock
Control ECU
KLS+
E
SLS+
SLS–
12
8
LG(*1)
R
(*2)
W–B
Shift Lock
Solenoid
4
126 3A
66 3A
U 1
Unlock Warning SW
Key
Interlock
Solenoid
3
J 3
Junction
Connector
A
J10(A), J11(B)
Junction Connector
D B
E A
II
IM

System Outline

Shift Lock Mechanism

If the brake pedal is depressed with the ignition SW set at ON (The stop light SW is on), the shift lock control ECU is activated, allowing the driver to change the shift lever to a position other than the P position.

○ : Parts Location

Code		See Page	Code		See Page	Code	See Page
J3		45 (C/P)	J11	B	47 (*1)	S12	45 (C/P)
		47 (*1)	J12	A	45 (C/P)		47 (*1)
J10	A	45 (C/P)		B	47 (*1)	U1	45 (C/P)
		47 (*1)	S8		45 (C/P)		47 (*1)
J11	B	45 (C/P)			47 (*1)		

: Junction Block and Wire Harness Connector

Code	See Page	Junction Block and Wire Harness (Connector Location)
2C	30	Engine Room Main Wire and Driver Side J/B (Lower Finish Panel)
2F	30	Instrument Panel Wire and Driver Side J/B (Lower Finish Panel)
2K		
2M		
3A	36 (*2)	Instrument Panel Wire and Passenger Side J/B (Instrument Panel Brace RH)
	37 (*3)	

: Connector Joining Wire Harness and Wire Harness

Code	See Page	Joining Wire Harness and Wire Harness (Connector Location)
IG8	56 (C/P)	Engine Room Main Wire and Instrument Panel Wire (Behind the Radio and Player)
	58 (*1)	

▽ : Ground Points

Code	See Page	Ground Points Location
II	56 (C/P)	Cowl Side Panel LH
	58 (*1)	
IM	56 (C/P)	Instrument Panel Reinforcement RH
	58 (*1)	

* 1 : Convertible * 2 : C/P, Convertible w/ VSC * 3 : Convertible w/o VSC

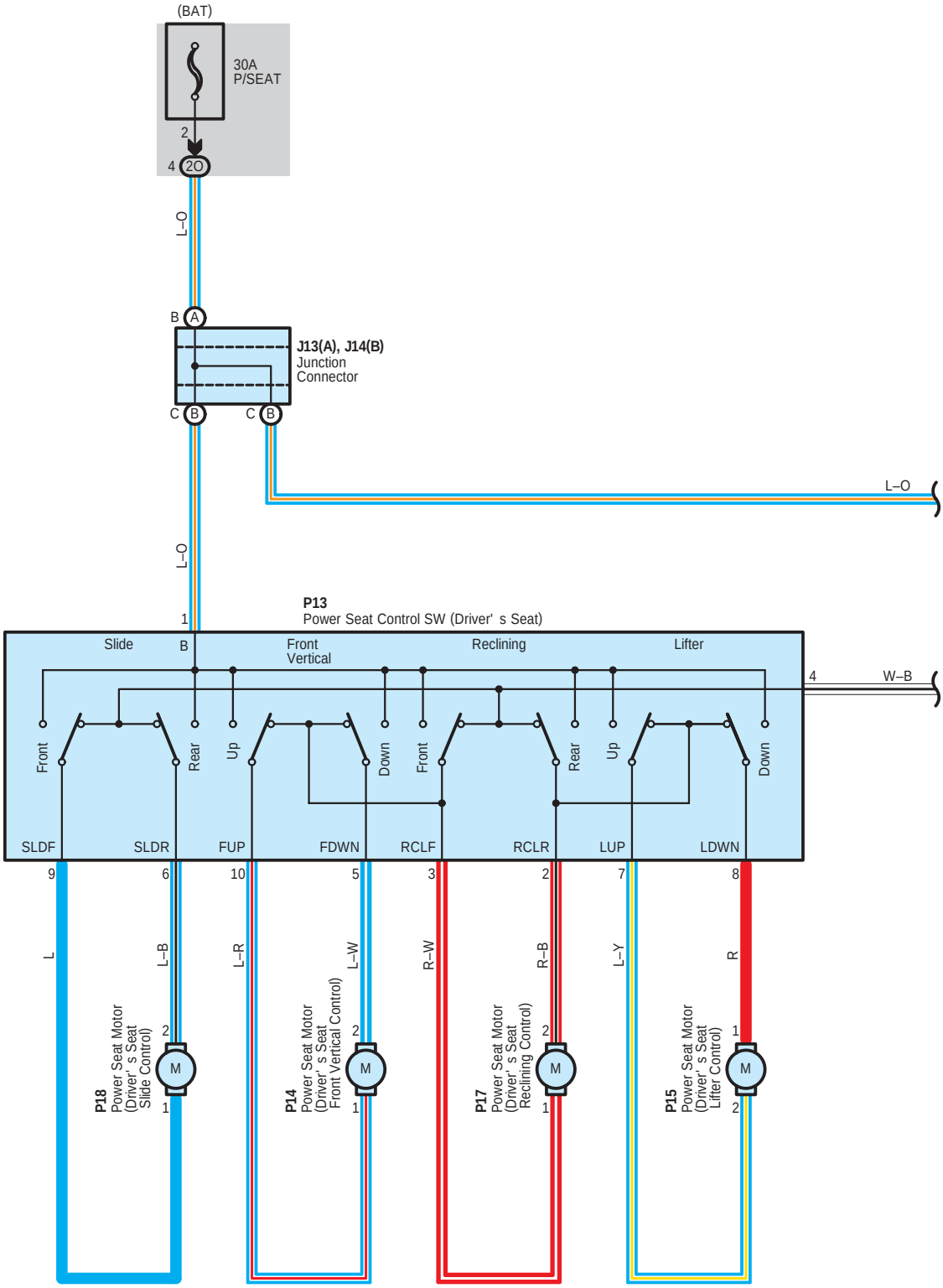
(BAT)
30A
P/SEAT
2
4
2O
L–O
B
A
J13(A), J14(B)
Junction
Connector
C
B
C
B
L–O
L–O
1
P13
Power Seat Control SW (Driver' s Seat)
Slide
B
Front
Vertical
Reclining
Lifter
4
W–B
Front
Rear
Up
Down
Front
Rear
Up
Down
SLDF
SLDR
FUP
FDWN
RCLF
RCLR
LUP
LDWN
9
6
10
5
3
2
7
8
L
L–B
L–R
L–W
R–W
R–B
L–Y
R
P18
Power Seat Motor
(Driver' s Seat
Slide Control)
P14
Power Seat Motor
(Driver' s Seat
Front Vertical Control)
P17
Power Seat Motor
(Driver' s Seat
Reclining Control)
P15
Power Seat Motor
(Driver' s Seat
Lifter Control)
M
M
M
M

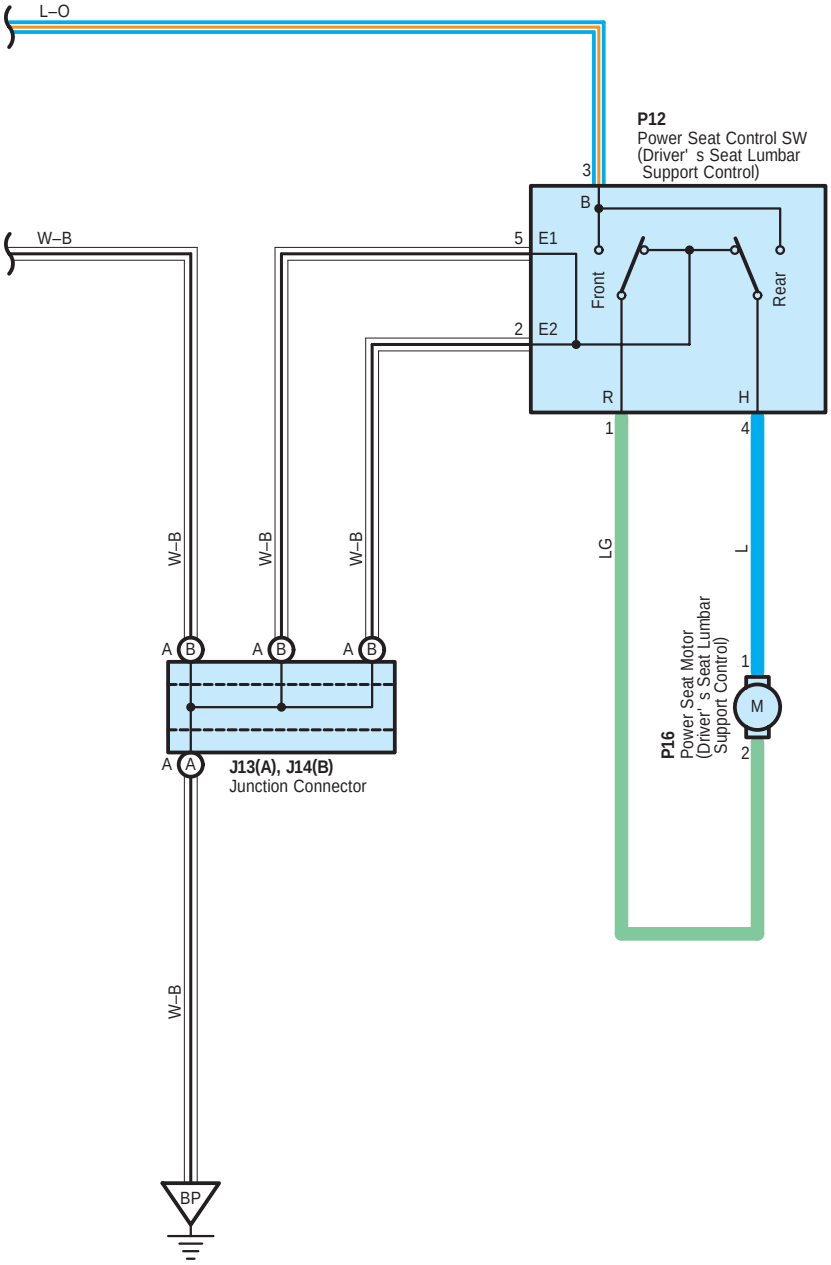
L–O
W–B
P12
Power Seat Control SW
(Driver' s Seat Lumbar
Support Control)
3
B
5
E1
Front
Rear
2
E2
R
H
1
4
W–B
W–B
W–B
LG
L
A
B
A
B
A
B
A
A
J13(A), J14(B)
Junction Connector
P16
Power Seat Motor
(Driver' s Seat Lumbar
Support Control)
1
M
2
W–B
BP

○ : **Parts Location**

Code		See Page	Code	See Page	Code	See Page
J13	A	52	P13	52	P16	52
J14	B	52	P14	52	P17	52
P12		52	P15	52	P18	52

: Junction Block and Wire Harness Connector

Code	See Page	Junction Block and Wire Harness (Connector Location)
2O	30	Floor Wire and Driver Side J/B (Lower Finish Panel)

▽ : **Ground Points**

Code	See Page	Ground Points Location
BP	60 (C/P)	Under the Driver's Seat
	61 (*1)	

* 1 : Convertible * 2 : C/P, Convertible w/ VSC * 3 : Convertible w/o VSC

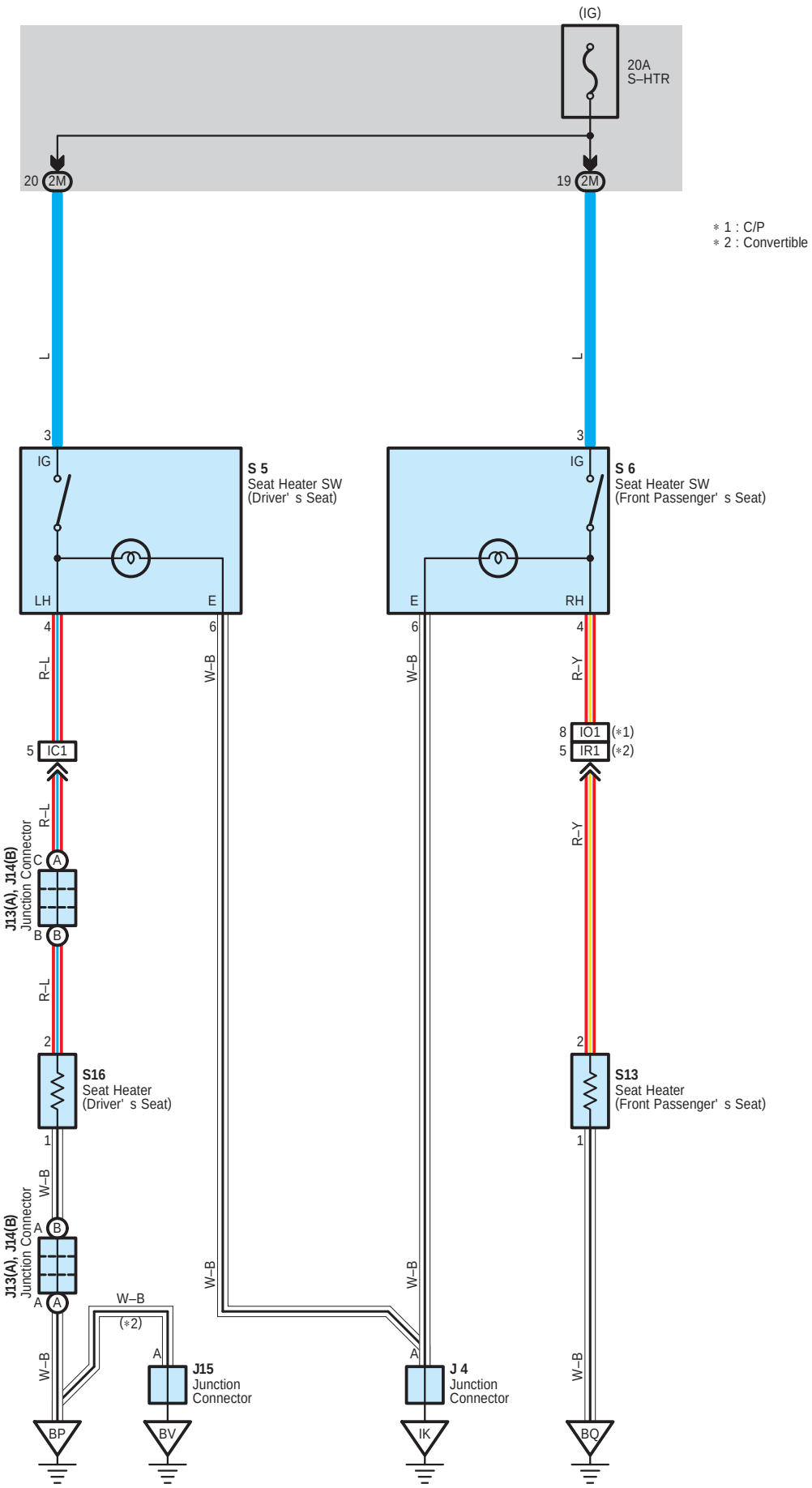
(IG)
20A
S–HTR
20 2M
19 2M
∗1 : C/P
∗2 : Convertible
L
L
3
3
IG
IG
S 5
Seat Heater SW
(Driver' s Seat)
S 6
Seat Heater SW
(Front Passenger' s Seat)
LH
E
E
RH
4
6
6
4
R–L
W–B
W–B
R–Y
8 IO1 (∗1)
5 IR1 (∗2)
5 IC1
R–L
R–Y
J13(A), J14(B)
Junction Connector
C A
B B
R–L
2
2
S16
Seat Heater
(Driver' s Seat)
S13
Seat Heater
(Front Passenger' s Seat)
1
1
W–B
J13(A), J14(B)
Junction Connector
A B
A A
W–B
W–B
W–B
W–B
(∗2)
A
A
J15
Junction
Connector
J 4
Junction
Connector
W–B
BP
BV
IK
BQ

○ : **Parts Location**

Code		See Page	Code	See Page	Code	See Page
J4		45 (C/P)	J15	50 (*1)	S6	47 (*1)
		47 (*1)	S5	45 (C/P)	S13	49 (C/P)
J13	A	52		47 (*1)		51 (*1)
J14	B	52	S6	45 (C/P)	S16	52

: **Junction Block and Wire Harness Connector**

Code	See Page	Junction Block and Wire Harness (Connector Location)
2M	30	Instrument Panel Wire and Driver Side J/B (Lower Finish Panel)

: **Connector Joining Wire Harness and Wire Harness**

Code	See Page	Joining Wire Harness and Wire Harness (Connector Location)
IC1	56 (C/P)	Instrument Panel Wire and Floor No.1 Wire (Left Kick Panel)
	58 (*1)	
IO1	57 (C/P)	Instrument Panel Wire and Floor No.2 Wire (Right Kick Panel)
IR1	59 (*1)	

▽ : **Ground Points**

Code	See Page	Ground Points Location
IK	56 (C/P)	Instrument Panel Brace LH
	58 (*1)	
BP	60 (C/P)	Under the Driver's Seat
	61 (*1)	
BQ	60 (C/P)	Under the Front Passenger's Seat
	61 (*1)	
BV	61 (*1)	Front Side of Rear Quarter Panel LH

* 1 : Convertible * 2 : C/P, Convertible w/ VSC * 3 : Convertible w/o VSC

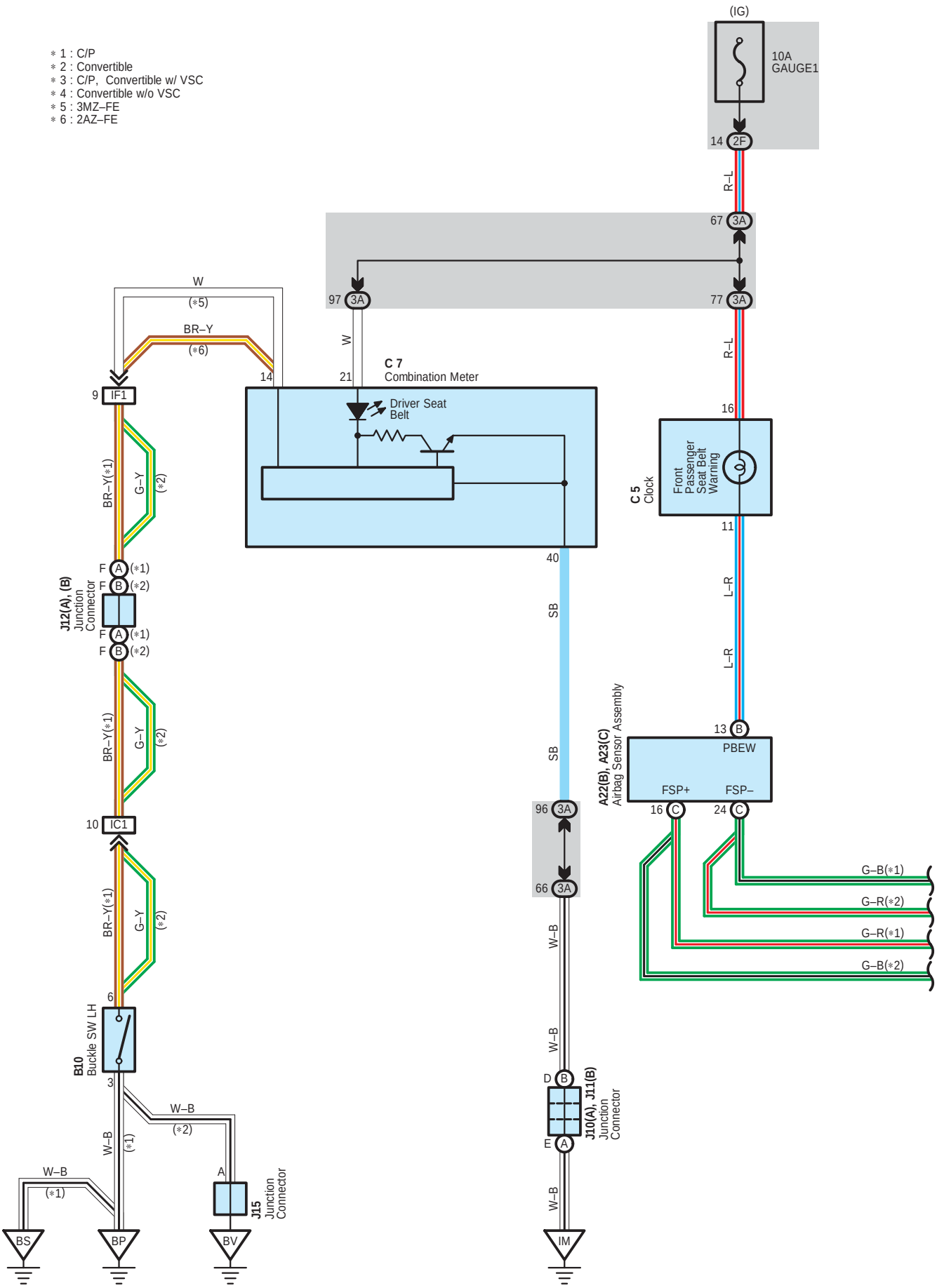
∗1 : C/P
∗2 : Convertible
∗3 : C/P, Convertible w/ VSC
∗4 : Convertible w/o VSC
∗5 : 3MZ–FE
∗6 : 2AZ–FE
(IG)
10A
GAUGE1
14 2F
R–L
67 3A
77 3A
97 3A
W
(∗5)
BR–Y
(∗6)
14
21
C 7
Combination Meter
Driver Seat
Belt
9 IF1
BR–Y(∗1)
G–Y
(∗2)
F A (∗1)
F B (∗2)
J12(A), (B)
Junction
Connector
F A (∗1)
F B (∗2)
10 IC1
6
B10
Buckle SW LH
3
W–B
(∗1)
(∗2)
A
J15
Junction
Connector
BS
BP
BV
16
C 5
Clock
Front
Passenger
Seat Belt
Warning
11
L–R
13 B
PBEW
A22(B), A23(C)
Airbag Sensor Assembly
FSP+
FSP–
16 C
24 C
G–B(∗1)
G–R(∗2)
G–R(∗1)
G–B(∗2)
40
SB
96 3A
66 3A
D B
E A
J10(A), J11(B)
Junction
Connector
IM

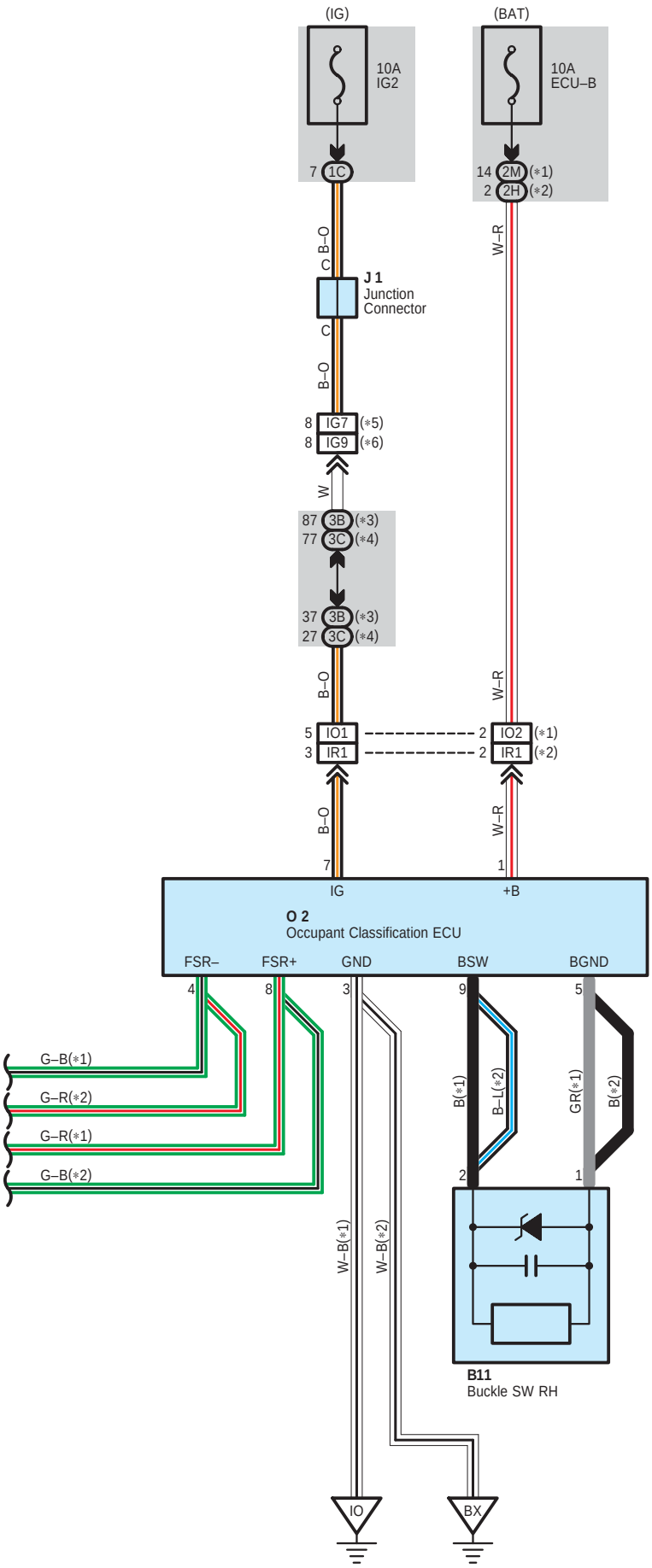
(IG)
(BAT)
10A
IG2
10A
ECU–B
7 1C
14 2M (*1)
2 2H (*2)
B–O
C
J 1
Junction
Connector
C
B–O
W–R
8 IG7 (*5)
8 IG9 (*6)
W
87 3B (*3)
77 3C (*4)
37 3B (*3)
27 3C (*4)
B–O
W–R
5 IO1
3 IR1
2 IO2 (*1)
2 IR1 (*2)
B–O
W–R
7
1
IG
+B
O 2
Occupant Classification ECU
FSR–
FSR+
GND
BSW
BGND
4
8
3
9
5
G–B(*1)
G–R(*2)
G–R(*1)
G–B(*2)
B(*1)
B–L(*2)
GR(*1)
B(*2)
2
1
W–B(*1)
W–B(*2)
B11
Buckle SW RH
IO
BX

Seat Belt Warning

○ : **Parts Location**

Code		See Page	Code		See Page	Code		See Page
A22	B	44 (C/P)	C5		44 (C/P)	J11	B	45 (C/P)
		46 (*1)			46 (*1)			47 (*1)
A23	C	44 (C/P)	C7		44 (C/P)	J12	A	45 (C/P)
		46 (*1)			46 (*1)		B	47 (*1)
B10		48 (C/P)	J1		45 (C/P)	J15		50 (*1)
		50 (*1)			47 (*1)	O2		52
B11		48 (C/P)	J10	A	45 (C/P)			
		50 (*1)			47 (*1)			

: **Junction Block and Wire Harness Connector**

Code	See Page	Junction Block and Wire Harness (Connector Location)
1C	27	Engine Room Main Wire and Engine Room J/B (Engine Compartment Left)
2F	30	Instrument Panel Wire and Driver Side J/B (Lower Finish Panel)
2H	31	
2M	30	
3A	36 (*2)	Instrument Panel Wire and Passenger Side J/B (Instrument Panel Brace RH)
	37 (*3)	
3B	36 (*2)	
3C	37 (*3)	

: **Connector Joining Wire Harness and Wire Harness**

Code	See Page	Joining Wire Harness and Wire Harness (Connector Location)
IC1	56 (C/P)	Instrument Panel Wire and Floor No.1 Wire (Left Kick Panel)
	58 (*1)	
IF1	56 (C/P)	Instrument Panel Wire and Instrument Panel Wire (Instrument Panel Brace LH)
	58 (*1)	
IG7	56 (C/P)	Engine Room Main Wire and Instrument Panel Wire (Behind the Radio and Player)
	58 (*1)	
IG9	56 (C/P)	
IO1	57 (C/P)	Instrument Panel Wire and Floor No.2 Wire (Right Kick Panel)
IO2		
IR1	59 (*1)	

: **Ground Points**

Code	See Page	Ground Points Location
IM	56 (C/P)	Instrument Panel Reinforcement RH
	58 (*1)	
IO	56 (C/P)	Right Kick Panel
BP	60 (C/P)	Under the Driver's Seat
	61 (*1)	
BS	60 (C/P)	Right Center Pillar
BV	61 (*1)	Front Side of Rear Quarter Panel LH
BX	61 (*1)	Under the Right Center Piller

* 1 : Convertible * 2 : C/P, Convertible w/ VSC * 3 : Convertible w/o VSC

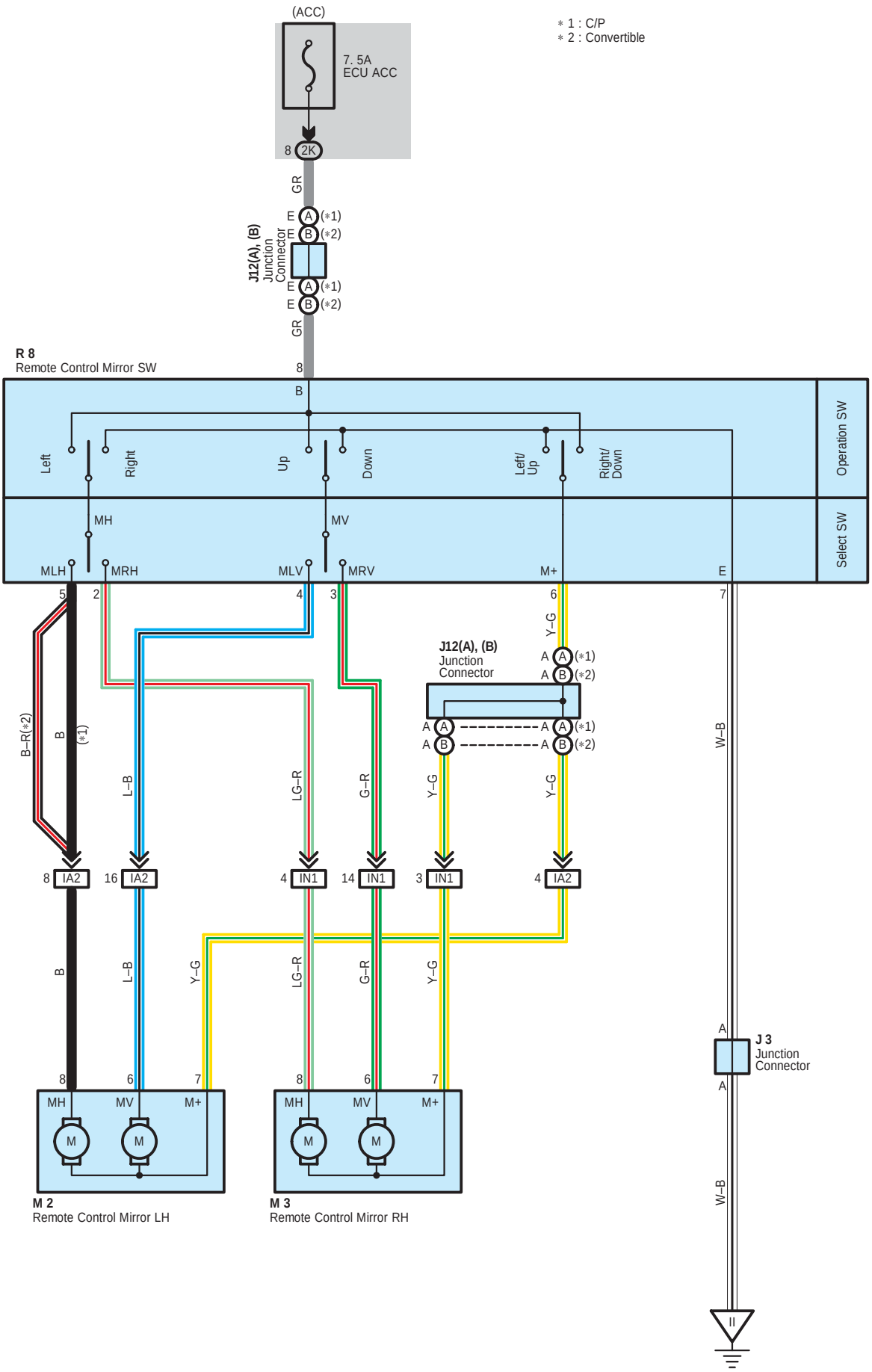
(ACC)
7. 5A
ECU ACC
8 2K
GR
E A (*1)
E B (*2)
J12(A), (B)
Junction
Connector
E A (*1)
E B (*2)
GR
8
R 8
Remote Control Mirror SW
B
Left
Right
Up
Down
Left/
Up
Right/
Down
Operation SW
MH
MV
Select SW
MLH
MRH
MLV
MRV
M+
E
5
2
4
3
6
7
Y–G
J12(A), (B)
Junction
Connector
A A (*1)
A B (*2)
A A (*1)
A B (*2)
B–R(*2)
B
(*1)
L–B
LG–R
G–R
Y–G
Y–G
W–B
8 IA2
16 IA2
4 IN1
14 IN1
3 IN1
4 IA2
B
L–B
Y–G
LG–R
G–R
Y–G
A
J 3
Junction
Connector
A
8
6
7
8
6
7
MH
MV
M+
MH
MV
M+
M
M
M
M
M 2
Remote Control Mirror LH
M 3
Remote Control Mirror RH
W–B
II
* 1 : C/P
* 2 : Convertible

: Parts Location

Code		See Page	Code	See Page	Code	See Page
J3		45 (C/P)	M2	48 (C/P)	R8	45 (C/P)
		47 (*1)		50 (*1)		47 (*1)
J12	A	45 (C/P)	M3	48 (C/P)		
	B	47 (*1)		50 (*1)		

: Junction Block and Wire Harness Connector

Code	See Page	Junction Block and Wire Harness (Connector Location)
2K	30	Instrument Panel Wire and Driver Side J/B (Lower Finish Panel)

: Connector Joining Wire Harness and Wire Harness

Code	See Page	Joining Wire Harness and Wire Harness (Connector Location)
IA2	56 (C/P)	Front Door LH Wire and Instrument Panel Wire (Left Kick Panel)
	58 (*1)	
IN1	57 (C/P)	Front Door RH Wire and Instrument Panel Wire (Right Kick Panel)
	59 (*1)	

: Ground Points

Code	See Page	Ground Points Location
II	56 (C/P)	Cowl Side Panel LH
	58 (*1)	

* 1 : Convertible * 2 : C/P, Convertible w/ VSC * 3 : Convertible w/o VSC

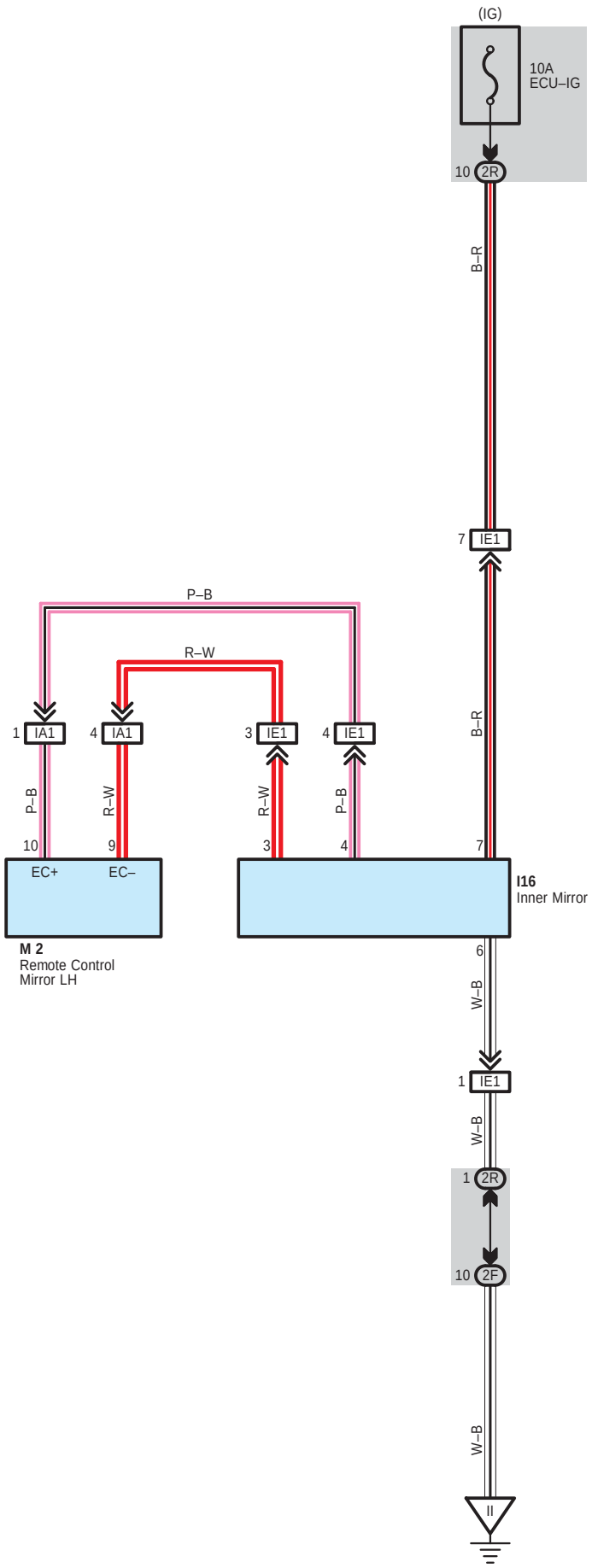
(IG)
10A
ECU–IG
10 2R
B–R
7 IE1
P–B
R–W
1 IA1
4 IA1
3 IE1
4 IE1
B–R
P–B
R–W
R–W
P–B
10
9
3
4
7
EC+
EC–
I16
Inner Mirror
M 2
Remote Control
Mirror LH
6
W–B
1 IE1
W–B
1 2R
10 2F
W–B

: Parts Location

Code	See Page	Code	See Page	Code	See Page
I16	48 (C/P)	M2	48 (C/P)		
	50 (*1)		50 (*1)		

: Junction Block and Wire Harness Connector

Code	See Page	Junction Block and Wire Harness (Connector Location)
2F	30	Instrument Panel Wire and Driver Side J/B (Lower Finish Panel)
2R		

: Connector Joining Wire Harness and Wire Harness

Code	See Page	Joining Wire Harness and Wire Harness (Connector Location)
IA1	56 (C/P)	Front Door LH Wire and Instrument Panel Wire (Left Kick Panel)
	58 (*1)	
IE1	56 (C/P)	Instrument Panel Wire and Roof Wire (Inside of Front Left Pillar)
	58 (*1)	

: Ground Points

Code	See Page	Ground Points Location
II	56 (C/P)	Cowl Side Panel LH
	58 (*1)	

* 1 : Convertible * 2 : C/P, Convertible w/ VSC * 3 : Convertible w/o VSC

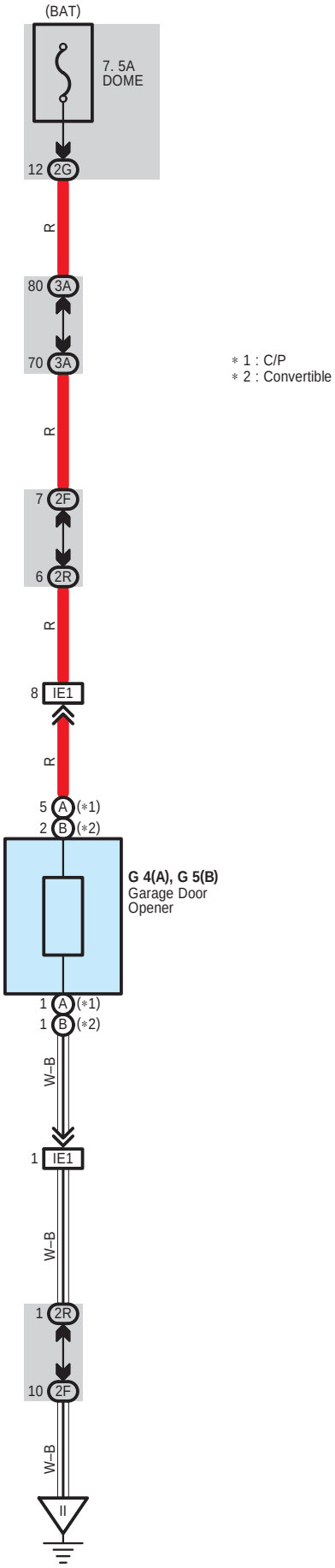
(BAT)
7. 5A
DOME
12 2G
R
80 3A
70 3A
R
7 2F
6 2R
R
8 IE1
R
5 A (*1)
2 B (*2)
G 4(A), G 5(B)
Garage Door
Opener
1 A (*1)
1 B (*2)
W–B
1 IE1
W–B
1 2R
10 2F
W–B
II
* 1 : C/P
* 2 : Convertible

○ : **Parts Location**

Code		See Page	Code		See Page	Code	See Page
G4	A	48 (C/P)	G5	B	50 (*1)		

: **Junction Block and Wire Harness Connector**

Code	See Page	Junction Block and Wire Harness (Connector Location)
2F	30	Instrument Panel Wire and Driver Side J/B (Lower Finish Panel)
2G	31	
2R	30	
3A	36 (*2)	Instrument Panel Wire and Passenger Side J/B (Instrument Panel Brace RH)
	37 (*3)	

: **Connector Joining Wire Harness and Wire Harness**

Code	See Page	Joining Wire Harness and Wire Harness (Connector Location)
IE1	56 (C/P)	Instrument Panel Wire and Roof Wire (Inside of Front Left Pillar)
	58 (*1)	

: **Ground Points**

Code	See Page	Ground Points Location
II	56 (C/P)	Cowl Side Panel LH
	58 (*1)	

* 1 : Convertible * 2 : C/P, Convertible w/ VSC * 3 : Convertible w/o VSC

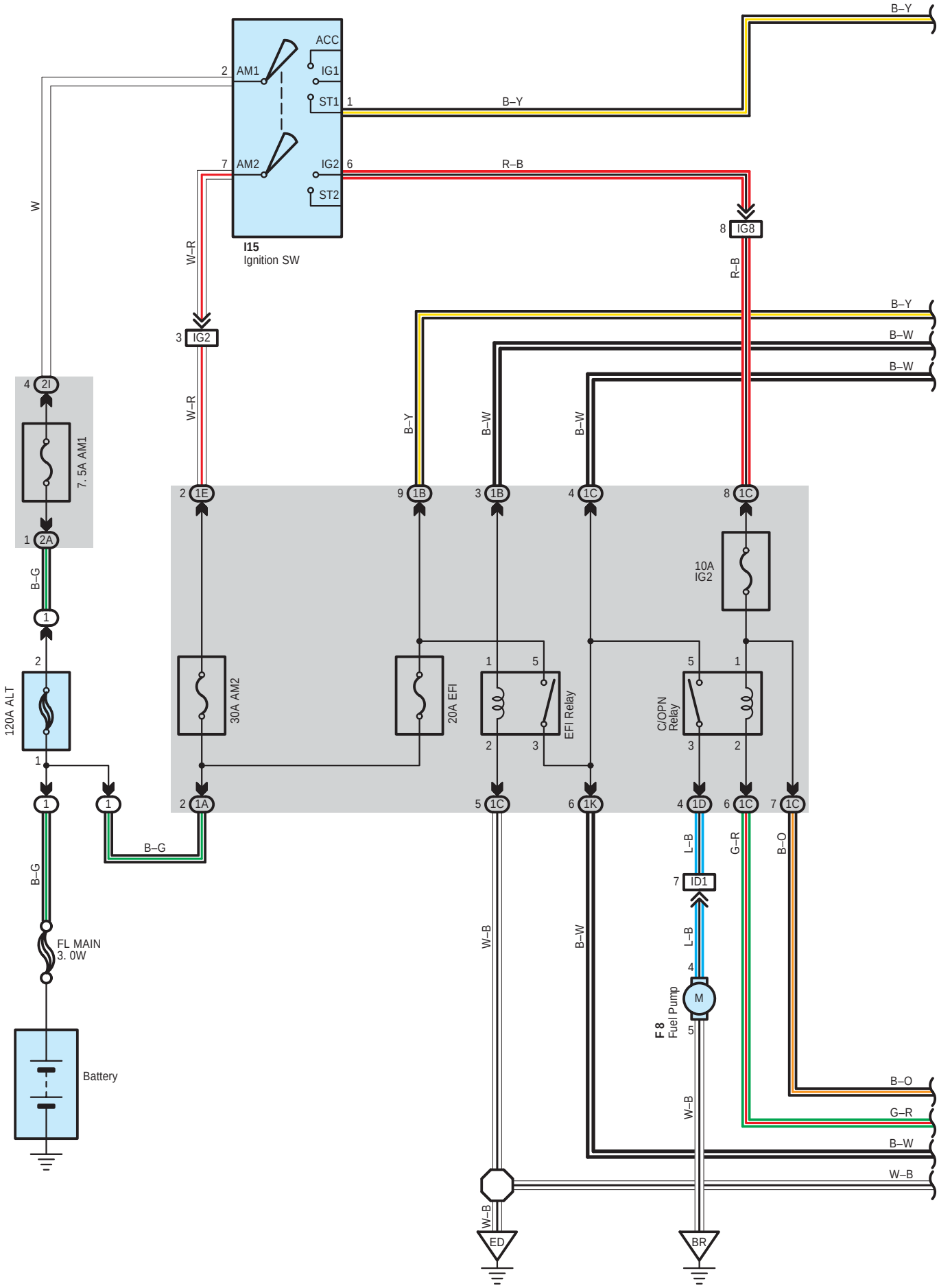
ACC
IG1
ST1
AM1
AM2
IG2
ST2
I15
Ignition SW
B–Y
R–B
W
W–R
IG8
IG2
B–W
2I
7. 5A AM1
2A
B–G
120A ALT
1E
1B
1C
1K
1A
1D
30A AM2
20A EFI
EFI Relay
C/OPN Relay
10A IG2
L–B
G–R
B–O
ID1
FL MAIN
3. 0W
Battery
W–B
F 8
Fuel Pump
M
ED
BR

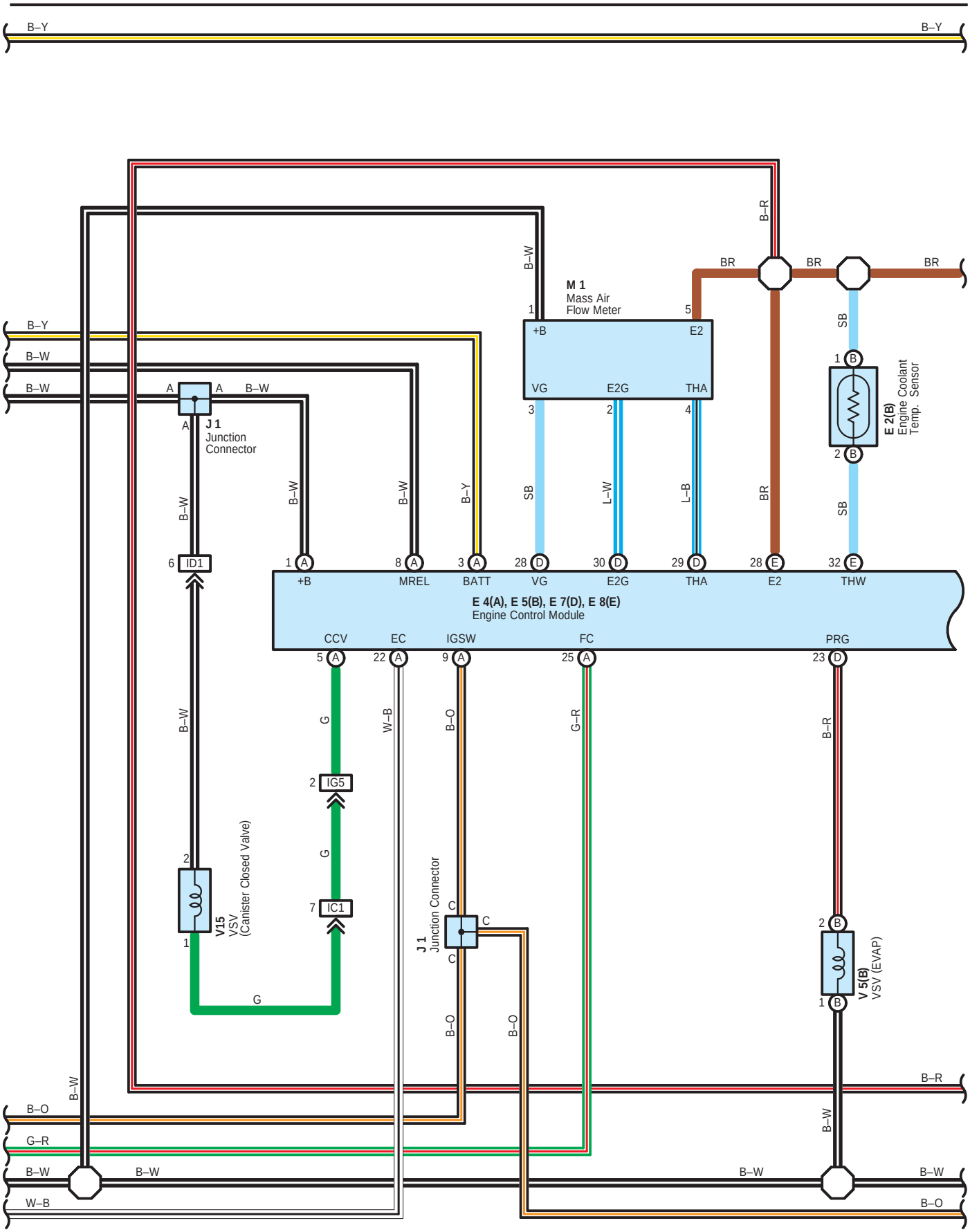
B–Y
B–Y
M 1
Mass Air
Flow Meter
+B
E2
VG
E2G
THA
J 1
Junction
Connector
E 2(B)
Engine Coolant
Temp. Sensor
ID1
+B
MREL
BATT
VG
E2G
THA
E2
THW
E 4(A), E 5(B), E 7(D), E 8(E)
Engine Control Module
CCV
EC
IGSW
FC
PRG
IG5
IC1
V15
VSV
(Canister Closed Valve)
J 1
Junction Connector
V 5(B)
VSV (EVAP)
B–W
B–R
B–O
G–R
W–B
BR
SB
L–W
L–B
B–Y
G

Engine Control for 2AZ–FE

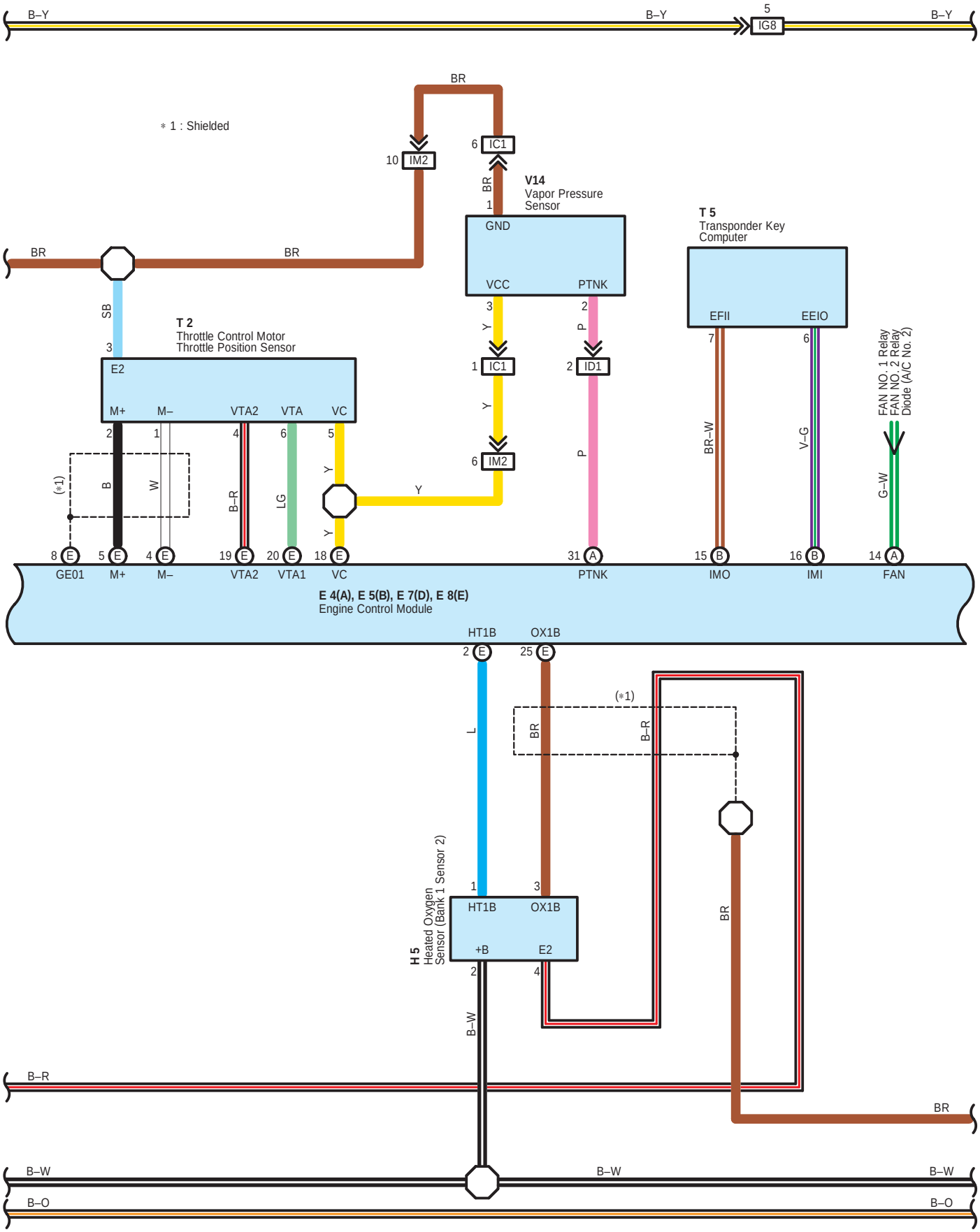

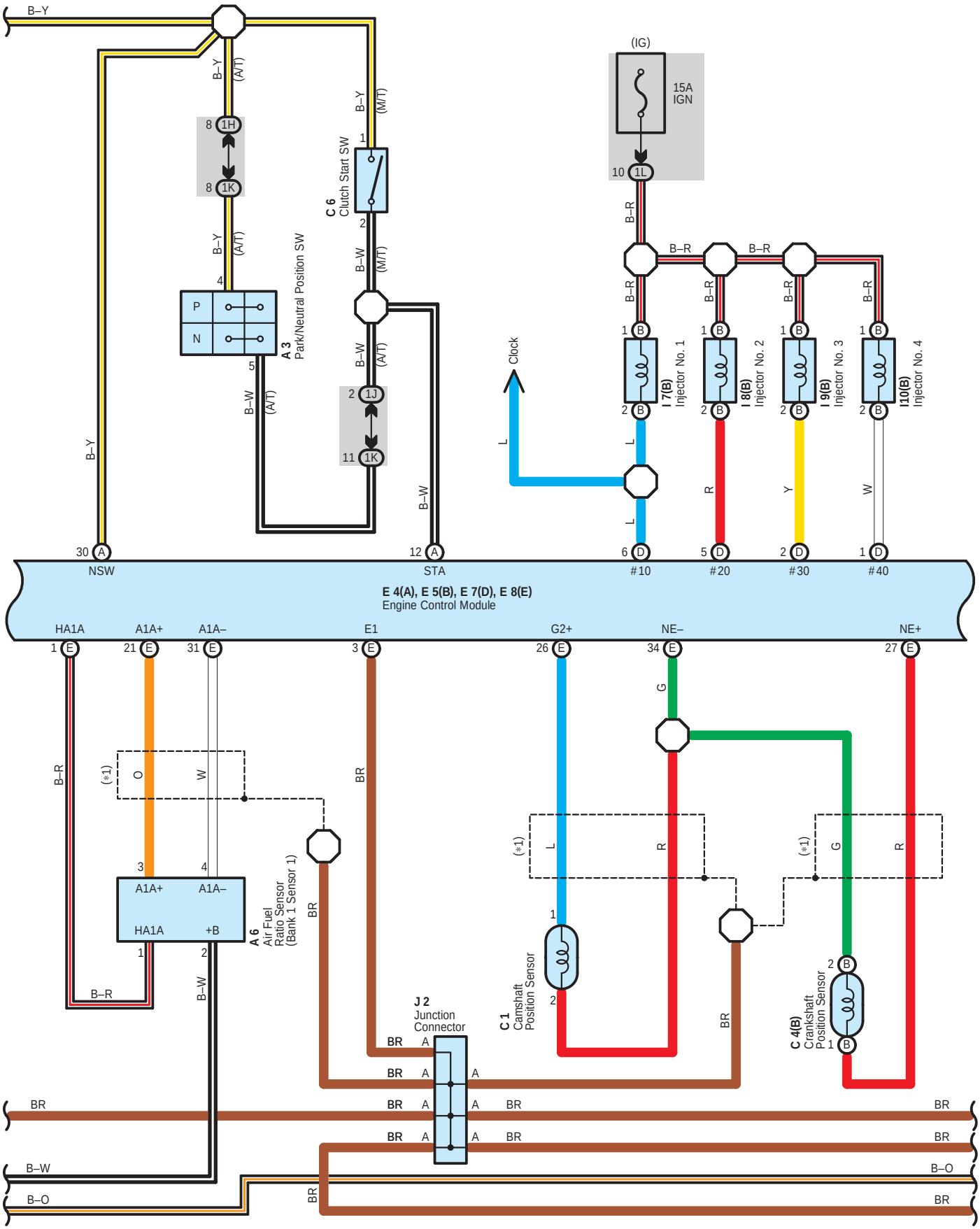
B–Y
(A/T)
(M/T)
8 1H
8 1K
C 6
Clutch Start SW
1
2
4
P
N
A 3
Park/Neutral Position SW
5
B–W
2 1J
11 1K
(IG)
15A
IGN
10 1L
B–R
Clock
L
I 7(B)
Injector No. 1
I 8(B)
Injector No. 2
I 9(B)
Injector No. 3
I10(B)
Injector No. 4
R
Y
W
30 A
NSW
12 A
STA
6 D
#10
5 D
#20
2 D
#30
1 D
#40
E 4(A), E 5(B), E 7(D), E 8(E)
Engine Control Module
HA1A
A1A+
A1A–
E1
G2+
NE–
NE+
1 E
21 E
31 E
3 E
26 E
34 E
27 E
G
(*1)
O
BR
A1A+
A1A–
HA1A
+B
A 6
Air Fuel
Ratio Sensor
(Bank 1 Sensor 1)
C 1
Camshaft
Position Sensor
C 4(B)
Crankshaft
Position Sensor
J 2
Junction
Connector
A
B–O

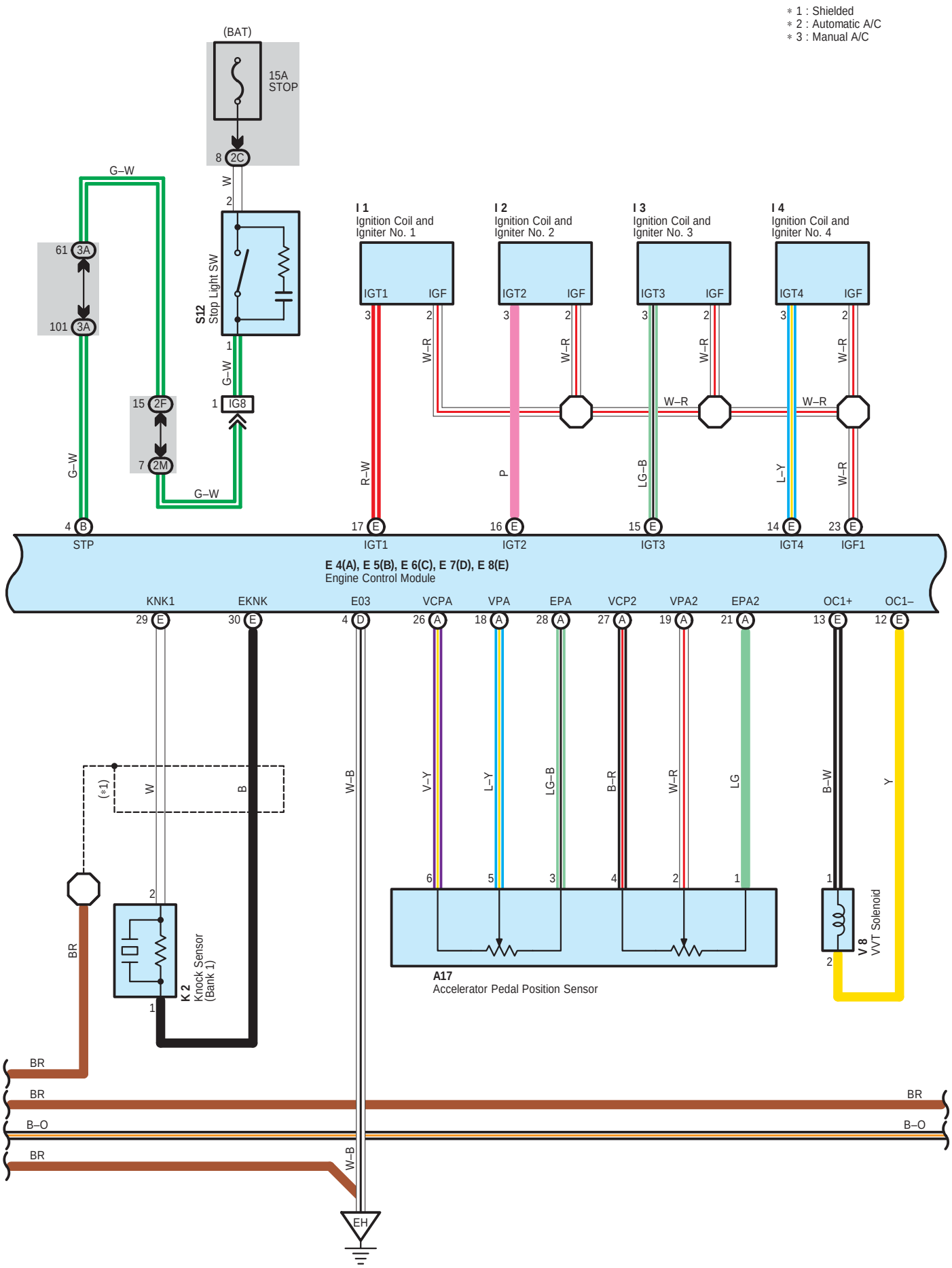
* 1 : Shielded
* 2 : Automatic A/C
* 3 : Manual A/C
(BAT)
15A
STOP
8 2C
W
2
G–W
61 3A
101 3A
S12
Stop Light SW
1
G–W
15 2F
7 2M
1 IG8
G–W
G–W
I 1
Ignition Coil and
Igniter No. 1
I 2
Ignition Coil and
Igniter No. 2
I 3
Ignition Coil and
Igniter No. 3
I 4
Ignition Coil and
Igniter No. 4
IGT1
IGF
IGT2
IGF
IGT3
IGF
IGT4
IGF
3
2
W–R
R–W
P
LG–B
L–Y
4 B
STP
17 E
IGT1
16 E
IGT2
15 E
IGT3
14 E
IGT4
23 E
IGF1
E 4(A), E 5(B), E 6(C), E 7(D), E 8(E)
Engine Control Module
KNK1
EKNK
E03
VCPA
VPA
EPA
VCP2
VPA2
EPA2
OC1+
OC1–
29 E
30 E
4 D
26 A
18 A
28 A
27 A
19 A
21 A
13 E
12 E
(*1)
W
B
W–B
V–Y
L–Y
LG–B
B–R
W–R
LG
B–W
Y
6
5
3
4
2
1
BR
K 2
Knock Sensor
(Bank 1)
A17
Accelerator Pedal Position Sensor
V 8
VVT Solenoid
BR
BR
BR
B–O
B–O
BR
W–B
EH

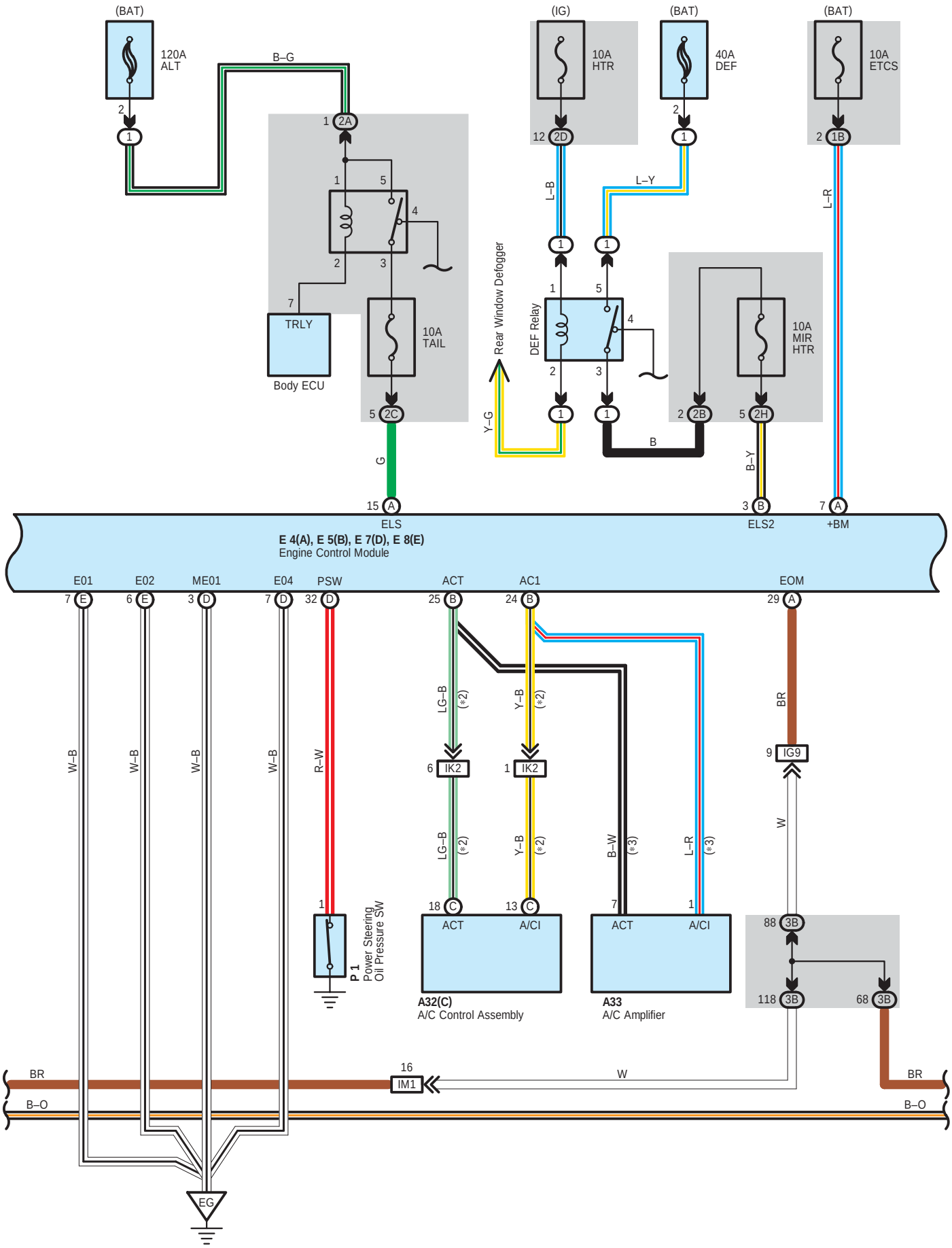
(BAT)
120A
ALT
B–G
(IG)
10A
HTR
(BAT)
40A
DEF
(BAT)
10A
ETCS
TRLY
Body ECU
10A
TAIL
Rear Window Defogger
DEF Relay
10A
MIR
HTR
L–B
L–Y
L–R
Y–G
G
B
B–Y
ELS
ELS2
+BM
E 4(A), E 5(B), E 7(D), E 8(E)
Engine Control Module
E01
E02
ME01
E04
PSW
ACT
AC1
EOM
W–B
R–W
LG–B
Y–B
B–W
BR
W
IK2
IG9
Power Steering
Oil Pressure SW
P 1
A32(C)
A/C Control Assembly
A33
A/C Amplifier
IM1
B–O
EG

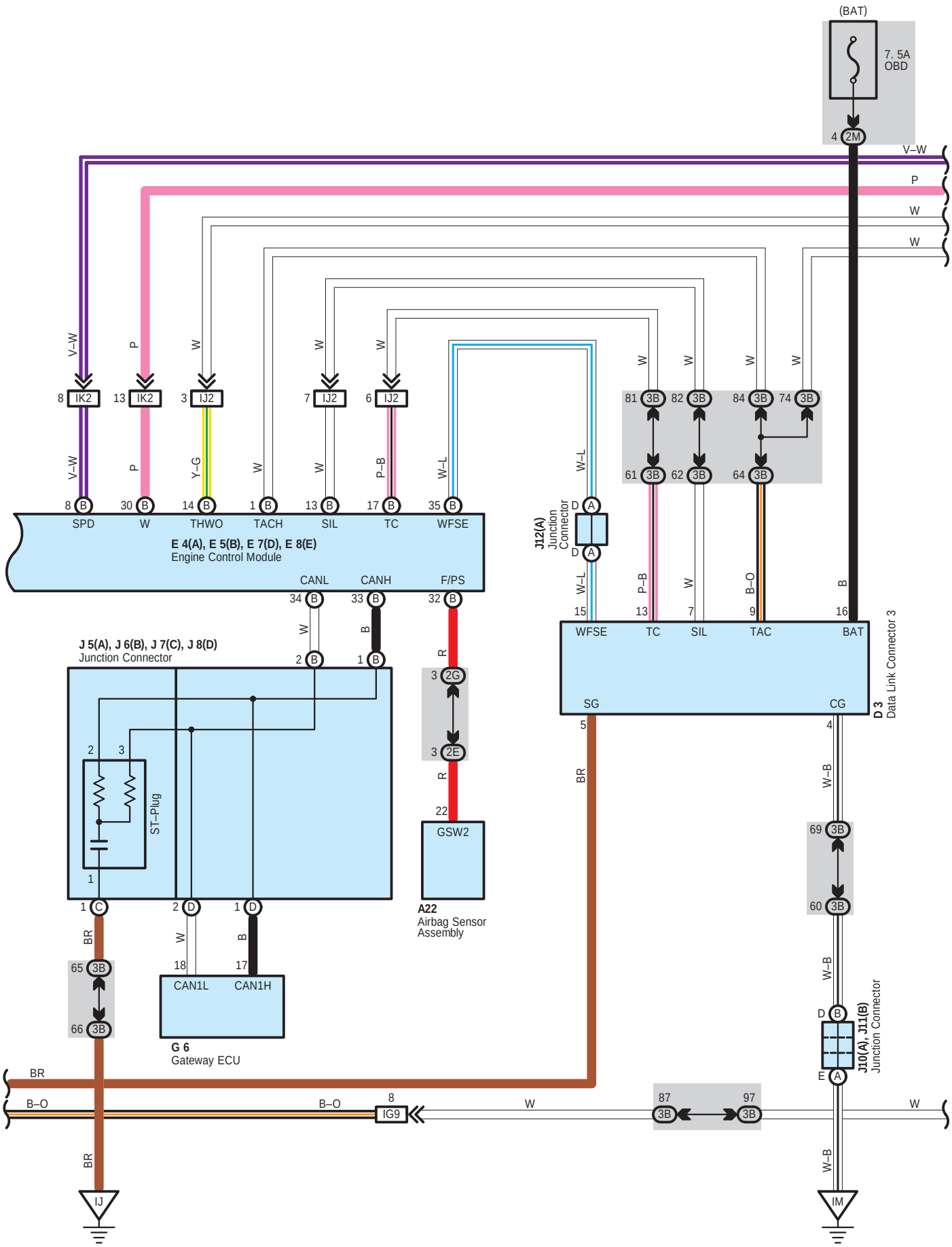
(BAT)
7. 5A
OBD
4 2M
V–W
P
W
W
8 IK2
13 IK2
3 IJ2
7 IJ2
6 IJ2
81 3B
82 3B
84 3B
74 3B
61 3B
62 3B
64 3B
8 B SPD
30 B W
14 B THWO
1 B TACH
13 B SIL
17 B TC
35 B WFSE
E 4(A), E 5(B), E 7(D), E 8(E)
Engine Control Module
CANL
CANH
F/PS
34 B
33 B
32 B
J12(A)
Junction
Connector
D A
W–L
P–B
B–O
B
15 WFSE
13 TC
7 SIL
9 TAC
16 BAT
D 3
Data Link Connector 3
SG
CG
5
4
J 5(A), J 6(B), J 7(C), J 8(D)
Junction Connector
2 B
1 B
3 2G
3 2E
R
22
GSW2
A22
Airbag Sensor
Assembly
ST–Plug
1 C
2 D
1 D
BR
W–B
69 3B
60 3B
65 3B
66 3B
18 CAN1L
17 CAN1H
G 6
Gateway ECU
J10(A), J11(B)
Junction Connector
E A
B–O
8 IG9
87 3B
97 3B
IJ
IM

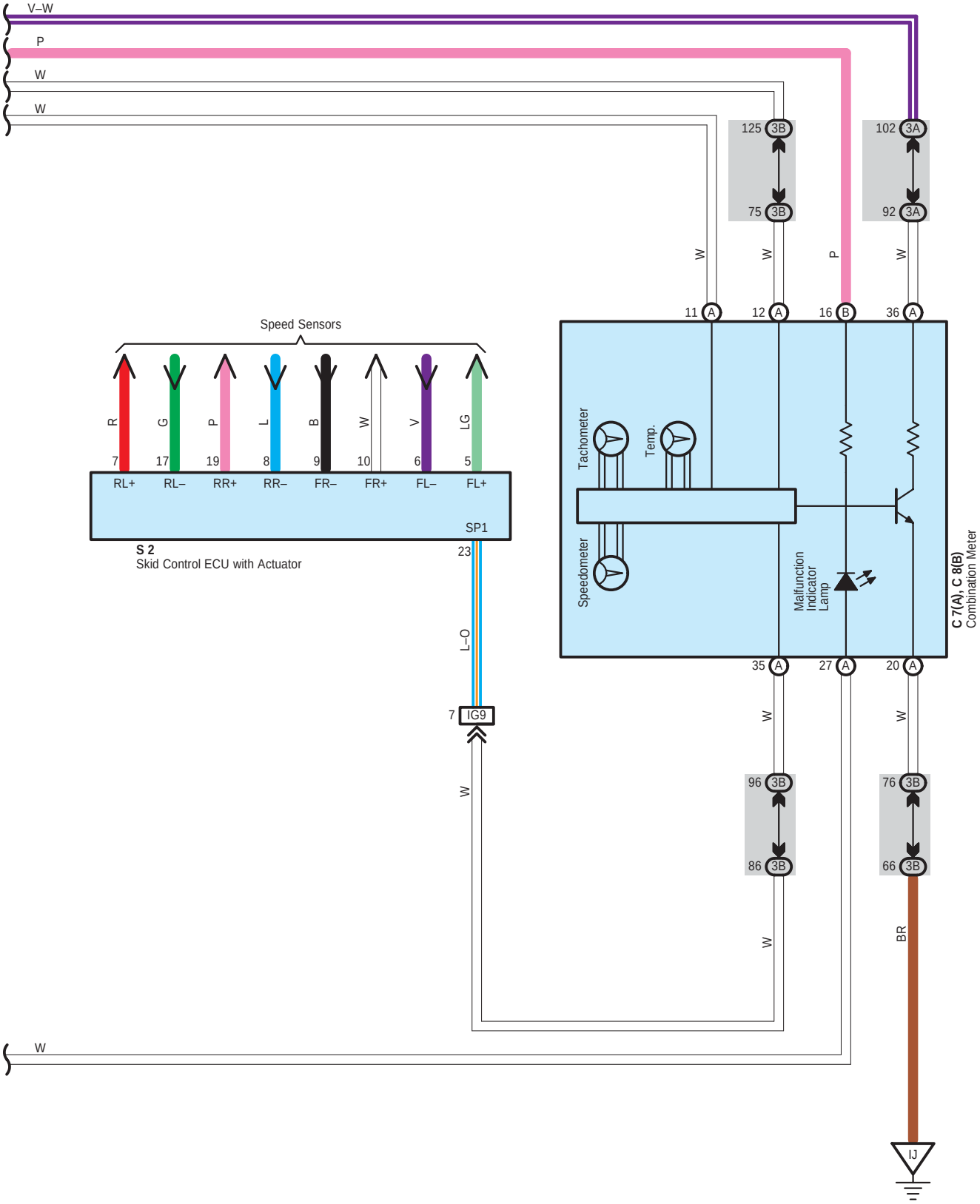
V–W
P
W
W
125 3B
75 3B
102 3A
92 3A
W
W
P
W
11 A
12 A
16 B
36 A
Speed Sensors
R
G
P
L
B
W
V
LG
7
17
19
8
9
10
6
5
RL+
RL–
RR+
RR–
FR–
FR+
FL–
FL+
SP1
23
S 2
Skid Control ECU with Actuator
L–O
7 IG9
W
Tachometer
Temp.
Speedometer
Malfunction Indicator Lamp
C 7(A), C 8(B)
Combination Meter
35 A
27 A
20 A
W
W
96 3B
86 3B
76 3B
66 3B
W
BR
W
IJ

System Outline

The engine control system utilizes a microcomputer and maintains overall control of the engine, transaxle etc. An outline of the engine control is given here.

1. Input Signals

(1) Engine coolant temp. signal circuit

The engine coolant temp. sensor detects the engine coolant temp. and has a built–in thermistor with a resistance, which varies according to the engine coolant temp.. The engine coolant temp. which is input into TERMINAL THW of the engine control module as a control signal.

(2) Intake air temp. signal circuit

The intake air temp. sensor is installed in the mass air flow meter and detects the intake air temp. which is input as a control signal to TERMINAL THA of the engine control module.

(3) Oxygen density signal circuit

The oxygen density in the exhaust emission is detected by the heated oxygen sensor and input as a control signal to TERMINAL OX1B of the engine control module (HT1B)

(4) RPM signal circuit

Camshaft position and crankshaft position are detected by the camshaft position sensor and crankshaft position sensor. Camshaft position is input as a control signal to TERMINAL G2+ of the engine control module, and engine RPM is input into TERMINAL NE+.

(5) Throttle position signal circuit

The throttle position sensor detects the throttle valve opening angle as a control signal, which is input into TERMINALS VTA1 and VTA2 of the engine control module.

(6) Battery signal circuit

Voltage is constantly applied to TERMINAL BATT of the engine control module. With the ignition SW turned on, the voltage for engine control module start–up power supply is applied to TERMINAL +B of the engine control module via the EFI relay.

(7) Stop light SW signal circuit

The stop light SW is used to detect whether the vehicle is braking or not and the signal is input into TERMINAL STP of the engine control module as a control signal.

(8) Starter signal circuit

To confirm whether the engine is cranking, the voltage is applied to the starter motor during cranking is detected and the signal is input into TERMINAL STA of the engine control module as a control signal.

(9) Engine knock signal circuit

Engine knocking is detected by knock sensor and the signal is input into TERMINAL KNK1 as a control signal.

(10) Air fuel ratio signal system

The air fuel ratio is detected and input as a control signal into TERMINAL A1A+ of the engine control module.

2. Control System

∗ SFI system
The SFI system monitors the engine condition through the signals input from each sensor to the engine control module. And the control signal is output to TERMINALS #10, #20, #30, #40 of the engine control module to operate the injector (Inject the fuel). The SFI system controls the fuel injection operation by the engine control module in response to the driving conditions.

∗ ESA system
The ESA system monitors the engine condition through the signals input to the engine control module from each sensor. The best ignition timing is decided according to this data and the memorized data in the engine control module and the control signal is output to TERMINALS IGT1, IGT2, IGT3, IGT4. This signal controls the igniter to provide the best ignition timing for the driving conditions.

∗ Heated oxygen sensor heater control system
The heated oxygen sensor heater control system turns the heater on when the intake air volume is low (Temp. of exhaust emissions is low), and warms up the heated oxygen sensor to improve detection performance of the sensor. The engine control module evaluates the signals from each sensor, and outputs current to TERMINAL HT1B to control the heater.

3. Diagnosis System

With the diagnosis system, when there is a malfunction in the engine control module signal system, the malfunctioning system is recorded in the memory. The malfunctioning system can be found by reading the code displayed by the malfunction indicator lamp.

4. Fail–Safe System

When a malfunction has occurred in any system, if there is a possibility of engine trouble being caused by continued control based on the signals from that system, the fail–safe system either controls the system by using data (Standard values) recorded in the engine control module memory or else stops the engine.

○ : Parts Location

Code		See Page	Code		See Page	Code		See Page
A3		42 (2AZ–FE)	F8		48 (C/P)	J8	D	38, 45 (C/P)
A6		42 (2AZ–FE)	G6		44 (C/P)	J10	A	45 (C/P)
A17		44 (C/P)	H5		42 (2AZ–FE)	J11	B	45 (C/P)
A22		44 (C/P)	I1		43 (2AZ–FE)	J12	A	45 (C/P)
A32	C	44 (C/P)	I2		43 (2AZ–FE)	K2		43 (2AZ–FE)
A33		44 (C/P)	I3		43 (2AZ–FE)	M1		43 (2AZ–FE)
C1		42 (2AZ–FE)	I4		43 (2AZ–FE)	P1		43 (2AZ–FE)
C4	B	42 (2AZ–FE)	I7	B	43 (2AZ–FE)	S2		43 (2AZ–FE)
C6		44 (C/P)	I8	B	43 (2AZ–FE)	S12		45 (C/P)
C7	A	44 (C/P)	I9	B	43 (2AZ–FE)	T2		43 (2AZ–FE)
C8	B	44 (C/P)	I10	B	43 (2AZ–FE)	T5		45 (C/P)
D3		44 (C/P)	I15		45 (C/P)	V5	B	43 (2AZ–FE)
E2	B	42 (2AZ–FE)	J1		45 (C/P)	V8		43 (2AZ–FE)
E4	A	44 (C/P)	J2		45 (C/P)	V14		49 (C/P)
E5	B	44 (C/P)	J5	A	38, 45 (C/P)	V15		49 (C/P)
E7	D	44 (C/P)	J6	B	38, 45 (C/P)			
E8	E	44 (C/P)	J7	C	38, 45 (C/P)			

▭ : Relay Blocks

Code	See Page	Relay Blocks (Relay Block Location)
1	24	Engine Room R/B (Engine Compartment Left)

: Junction Block and Wire Harness Connector

Code	See Page	Junction Block and Wire Harness (Connector Location)
1A	27	Engine Room Main Wire and Engine Room J/B (Engine Compartment Left)
1B		
1C		
1D		
1E		
1H		
1J		
1K	27	Engine Wire and Engine Room J/B (Engine Compartment Left)
1L		
2A	30	Engine Room Main Wire and Driver Side J/B (Lower Finish Panel)
2B		
2C		
2D		
2E	30	Instrument Panel Wire and Driver Side J/B (Lower Finish Panel)
2F		
2G	31	
2H		
2I		
2M	30	
3A	36 (*2)	Instrument Panel Wire and Passenger Side J/B (Instrument Panel Brace RH)
3B		

: Connector Joining Wire Harness and Wire Harness

Code	See Page	Joining Wire Harness and Wire Harness (Connector Location)
IC1	56 (C/P)	Instrument Panel Wire and Floor No.1 Wire (Left Kick Panel)
ID1	56 (C/P)	Engine Room Main Wire and Floor No.1 Wire (Left Side of Driver Side J/B)
IG2	56 (C/P)	Engine Room Main Wire and Instrument Panel Wire (Behind the Radio and Player)
IG5		
IG8		
IG9		
IJ2	57 (C/P)	Instrument Panel Wire and Instrument Panel Wire (Instrument Panel Reinforcement RH)
IK2		
IM1	57 (C/P)	Engine Wire and Instrument Panel Wire (Behind the Glove Box)
IM2		

: Ground Points

Code	See Page	Ground Points Location
ED	55 (2AZ–FE)	Left Fender
EG	55 (2AZ–FE)	Intake Side of Cylinder Block
EH	55 (2AZ–FE)	Left Side of Cylinder Head
IJ	56 (C/P)	Instrument Panel Brace LH
IM	56 (C/P)	Instrument Panel Reinforcement RH
BR	60 (C/P)	Left Center Pillar

* 1 : Convertible * 2 : C/P, Convertible w/ VSC * 3 : Convertible w/o VSC

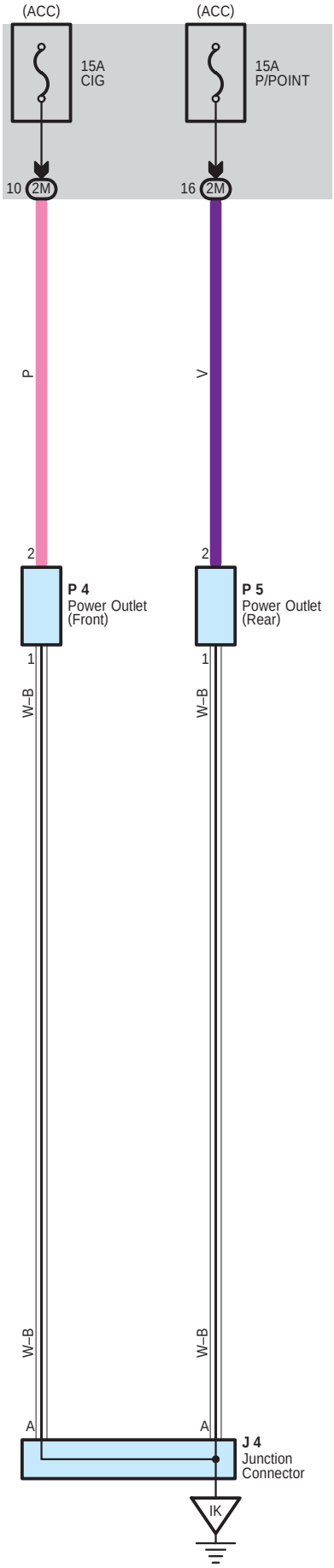
(ACC)
15A
CIG
(ACC)
15A
P/POINT
10
2M
16
2M
P
V
2
2
P 4
Power Outlet
(Front)
P 5
Power Outlet
(Rear)
1
1
W–B
W–B
W–B
W–B
A
A
J 4
Junction
Connector
IK

: Parts Location

Code	See Page	Code	See Page	Code	See Page
J4	45 (C/P)	P4	45 (C/P)	P5	45 (C/P)
	47 (*1)		47 (*1)		47 (*1)

: Junction Block and Wire Harness Connector

Code	See Page	Junction Block and Wire Harness (Connector Location)
2M	30	Instrument Panel Wire and Driver Side J/B (Lower Finish Panel)

: Ground Points

Code	See Page	Ground Points Location
IK	56 (C/P)	Instrument Panel Brace LH
	58 (*1)	

* 1 : Convertible * 2 : C/P, Convertible w/ VSC * 3 : Convertible w/o VSC

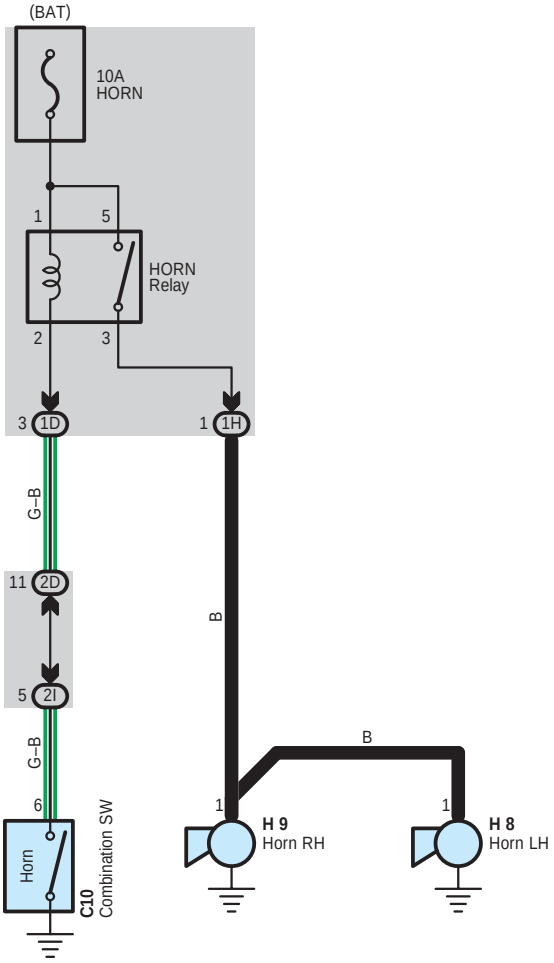
(BAT)
10A
HORN
1
5
HORN
Relay
2
3
3
1D
1
1H
G–B
11
2D
B
5
2I
G–B
B
6
1
1
Horn
C10
Combination SW
H 9
Horn RH
H 8
Horn LH

: Parts Location

Code	See Page	Code	See Page	Code	See Page
C10	44 (C/P)	H8	40 (3MZ–FE)	H9	40 (3MZ–FE)
	46 (*1)		42 (2AZ–FE)		42 (2AZ–FE)

: Junction Block and Wire Harness Connector

Code	See Page	Junction Block and Wire Harness (Connector Location)
1D	27	Engine Room Main Wire and Engine Room J/B (Engine Compartment Left)
1H		
2D	30	Engine Room Main Wire and Driver Side J/B (Lower Finish Panel)
2I	31	Instrument Panel Wire and Driver Side J/B (Lower Finish Panel)

* 1 : Convertible * 2 : C/P, Convertible w/ VSC * 3 : Convertible w/o VSC

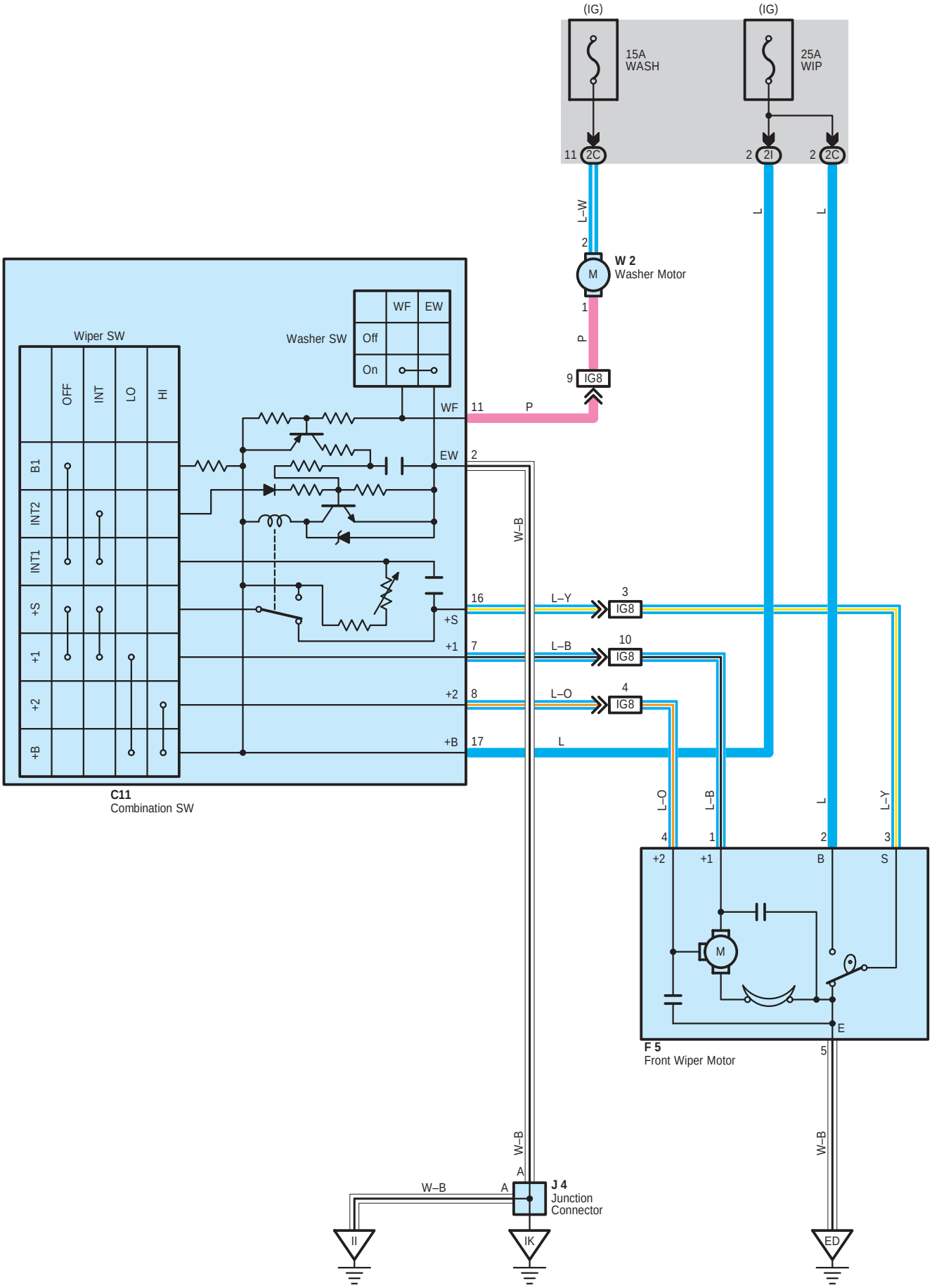
(IG)
15A
WASH
(IG)
25A
WIP
11 2C
2 2I
2 2C
L–W
L
L
2
W 2
Washer Motor
M
1
P
9 IG8
Wiper SW
OFF
INT
LO
HI
B1
INT2
INT1
+S
+1
+2
+B
Washer SW
WF
EW
Off
On
WF 11 P
EW 2
W–B
16 L–Y 3 IG8
+S
+1 7 L–B 10 IG8
+2 8 L–O 4 IG8
+B 17 L
C11
Combination SW
L–O
L–B
L
L–Y
4 +2
1 +1
2 B
3 S
M
E
F 5
Front Wiper Motor
5
W–B
W–B
A
W–B
A
J 4
Junction
Connector
II
IK
ED

System Outline

With the ignition SW turned on, the current flows to TERMINAL 17 of the wiper and washer SW and TERMINAL 2 of the front wiper motor through the WIP fuse. The current flows to TERMINAL 2 of the washer motor through the WASH fuse.

1. Low Speed Position

With the wiper and washer SW turned to LO position, the current flows from TERMINAL 17 of the wiper and washer SW to TERMINAL 7 to TERMINAL 1 of the front wiper motor to TERMINAL 5 to GROUND and causes the front wiper motor to run at low speed.

2. High Speed Position

With the wiper and washer SW turned to HI position, the current flows from TERMINAL 17 of the wiper and washer SW to TERMINAL 8 to TERMINAL 4 of the front wiper motor to TERMINAL 5 to GROUND and causes the front wiper motor to run at high speed.

3. INT Position

With the wiper and washer SW turned to INT position, the wiper relay operates and current flows from TERMINAL 17 of the wiper and washer SW to TERMINAL 2 to GROUND. This activates the intermittent circuit and the current flows from TERMINAL 17 of the wiper and washer SW to TERMINAL 7 to TERMINAL 1 of the front wiper motor to TERMINAL 5 to GROUND and the wiper operates. Intermittent operation is controlled by a condenser charge and discharge function in the relay.

4. Washer Interlocking Operation

With the wiper and washer SW pulled to WASHER position (Washer SW ON position), the current flows from the WASHER fuse to TERMINAL 2 of the washer motor to TERMINAL 1 to TERMINAL 11 of the wiper and washer SW to TERMINAL 2 to GROUND and causes the washer motor to run and the window washer to spray. Simultaneously, current flows from the WIPER fuse to TERMINAL 17 of the wiper and washer SW to TERMINAL 7 to TERMINAL 1 of the front wiper motor to TERMINAL 5 to GROUND, causing the wiper to function.

: Parts Location

Code	See Page	Code	See Page	Code	See Page
C11	44 (C/P)	F5	42 (2AZ–FE)	W2	41 (3MZ–FE)
	46 (*1)	J4	45 (C/P)		43 (2AZ–FE)
F5	40 (3MZ–FE)		47 (*1)		

: Junction Block and Wire Harness Connector

Code	See Page	Junction Block and Wire Harness (Connector Location)
2C	30	Engine Room Main Wire and Driver Side J/B (Lower Finish Panel)
2I	31	Instrument Panel Wire and Driver Side J/B (Lower Finish Panel)

: Connector Joining Wire Harness and Wire Harness

Code	See Page	Joining Wire Harness and Wire Harness (Connector Location)
IG8	56 (C/P)	Engine Room Main Wire and Instrument Panel Wire (Behind the Radio and Player)
	58 (*1)	

: Ground Points

Code	See Page	Ground Points Location
ED	54 (3MZ–FE)	Left Fender
	55 (2AZ–FE)	
II	56 (C/P)	Cowl Side Panel LH
	58 (*1)	
IK	56 (C/P)	Instrument Panel Brace LH
	58 (*1)	

* 1 : Convertible * 2 : C/P, Convertible w/ VSC * 3 : Convertible w/o VSC

Rear Window Defogger and Mirror Heater

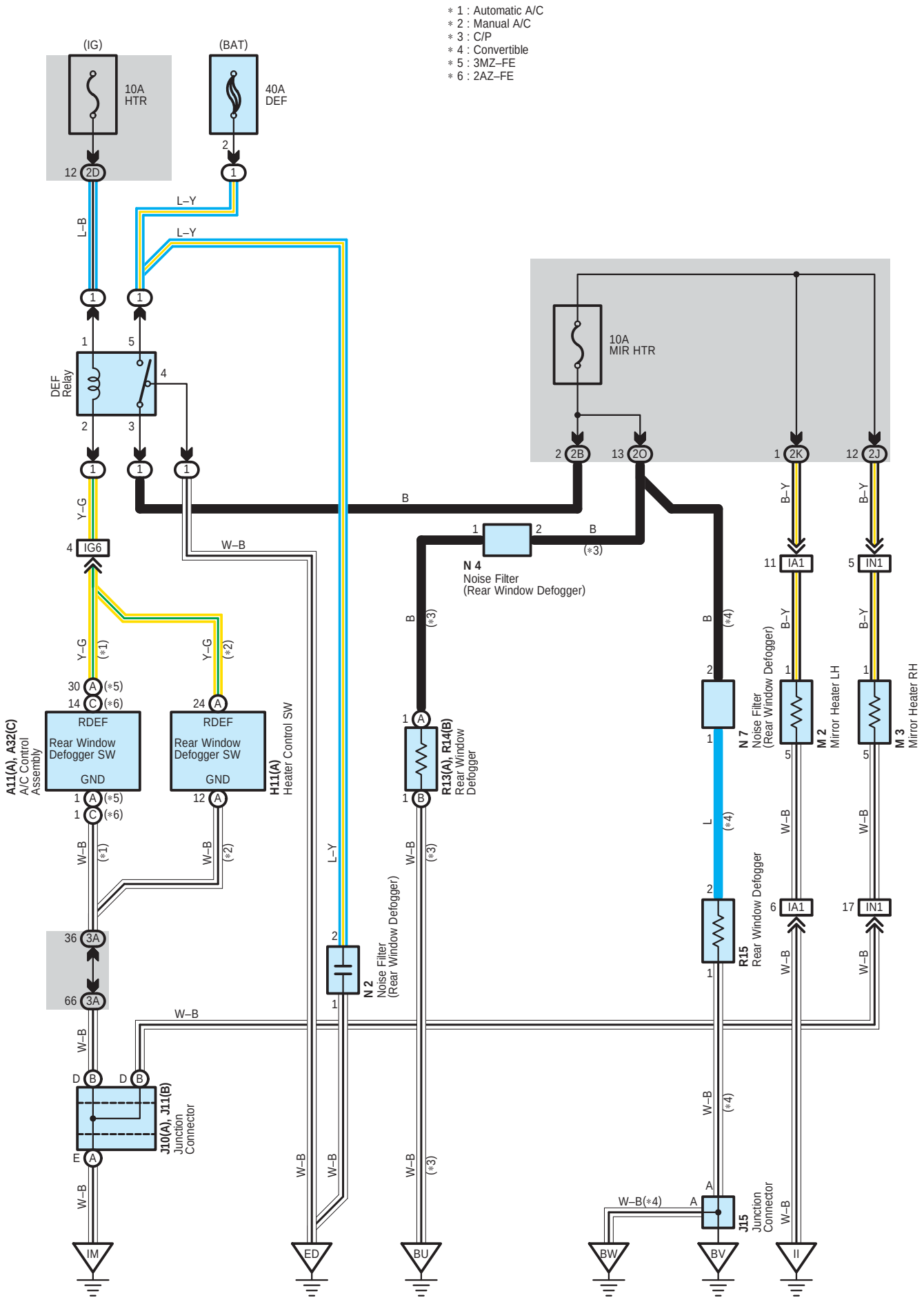

: Parts Location

Code		See Page	Code		See Page	Code		See Page
A11	A	44 (C/P)	J11	B	45 (C/P)	N2		41 (3MZ–FE)
		46 (*1)			47 (*1)			43 (2AZ–FE)
A32	C	44 (C/P)	J15		50 (*1)	N4		49 (C/P)
H11	A	44 (C/P)	M2		48 (C/P)	N7		51 (*1)
		46 (*1)			50 (*1)	R13	A	49 (C/P)
J10	A	45 (C/P)	M3		48 (C/P)	R14	B	49 (C/P)
		47 (*1)			50 (*1)	R15		51 (*1)

: Relay Blocks

Code	See Page	Relay Blocks (Relay Block Location)
1	24	Engine Room R/B (Engine Compartment Left)

: Junction Block and Wire Harness Connector

Code	See Page	Junction Block and Wire Harness (Connector Location)
2B	30	Engine Room Main Wire and Driver Side J/B (Lower Finish Panel)
2D		
2J	30	Instrument Panel Wire and Driver Side J/B (Lower Finish Panel)
2K		
2O	30	Floor Wire and Driver Side J/B (Lower Finish Panel)
3A	36 (*2)	Instrument Panel Wire and Passenger Side J/B (Instrument Panel Brace RH)
	37 (*3)	

: Connector Joining Wire Harness and Wire Harness

Code	See Page	Joining Wire Harness and Wire Harness (Connector Location)
IA1	56 (C/P)	Front Door LH Wire and Instrument Panel Wire (Left Kick Panel)
	58 (*1)	
IG6	56 (C/P)	Engine Room Main Wire and Instrument Panel Wire (Behind the Radio and Player)
	58 (*1)	
IN1	57 (C/P)	Front Door RH Wire and Instrument Panel Wire (Right Kick Panel)
	59 (*1)	

: Ground Points

Code	See Page	Ground Points Location
ED	54 (3MZ–FE)	Left Fender
	55 (2AZ–FE)	
II	56 (C/P)	Cowl Side Panel LH
	58 (*1)	
IM	56 (C/P)	Instrument Panel Reinforcement RH
	58 (*1)	
BU	60 (C/P)	Luggage Room Left
BV	61 (*1)	Front Side of Rear Quarter Panel LH
BW	61 (*1)	Near the Left Luggage Compartment Door

* 1 : Convertible * 2 : C/P, Convertible w/ VSC * 3 : Convertible w/o VSC

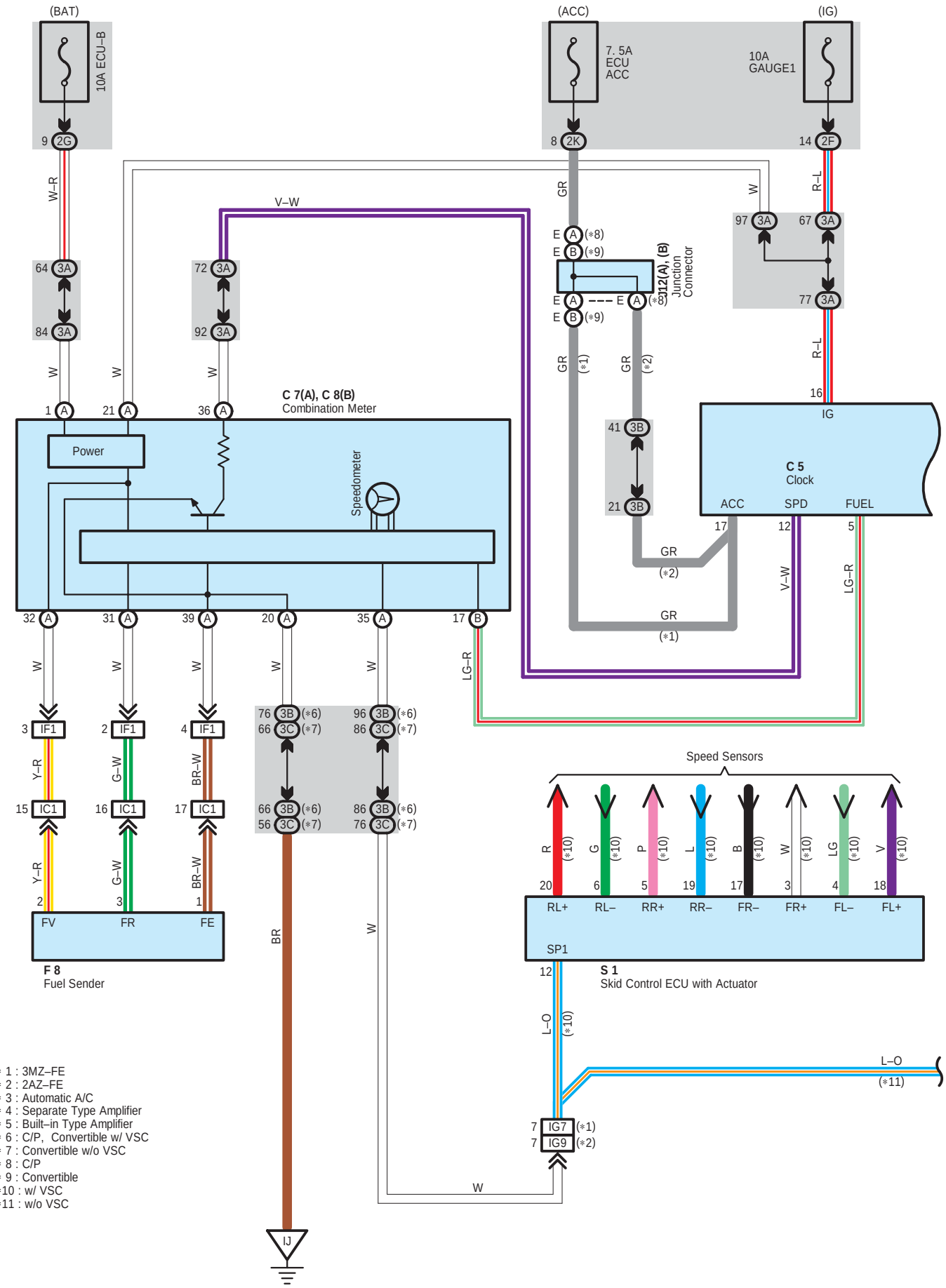

* 1 : 3MZ–FE
* 2 : 2AZ–FE
* 3 : Automatic A/C
* 4 : Separate Type Amplifier
* 5 : Built–in Type Amplifier
* 6 : C/P, Convertible w/ VSC
* 7 : Convertible w/o VSC
* 8 : C/P
* 9 : Convertible
*10 : w/ VSC
*11 : w/o VSC

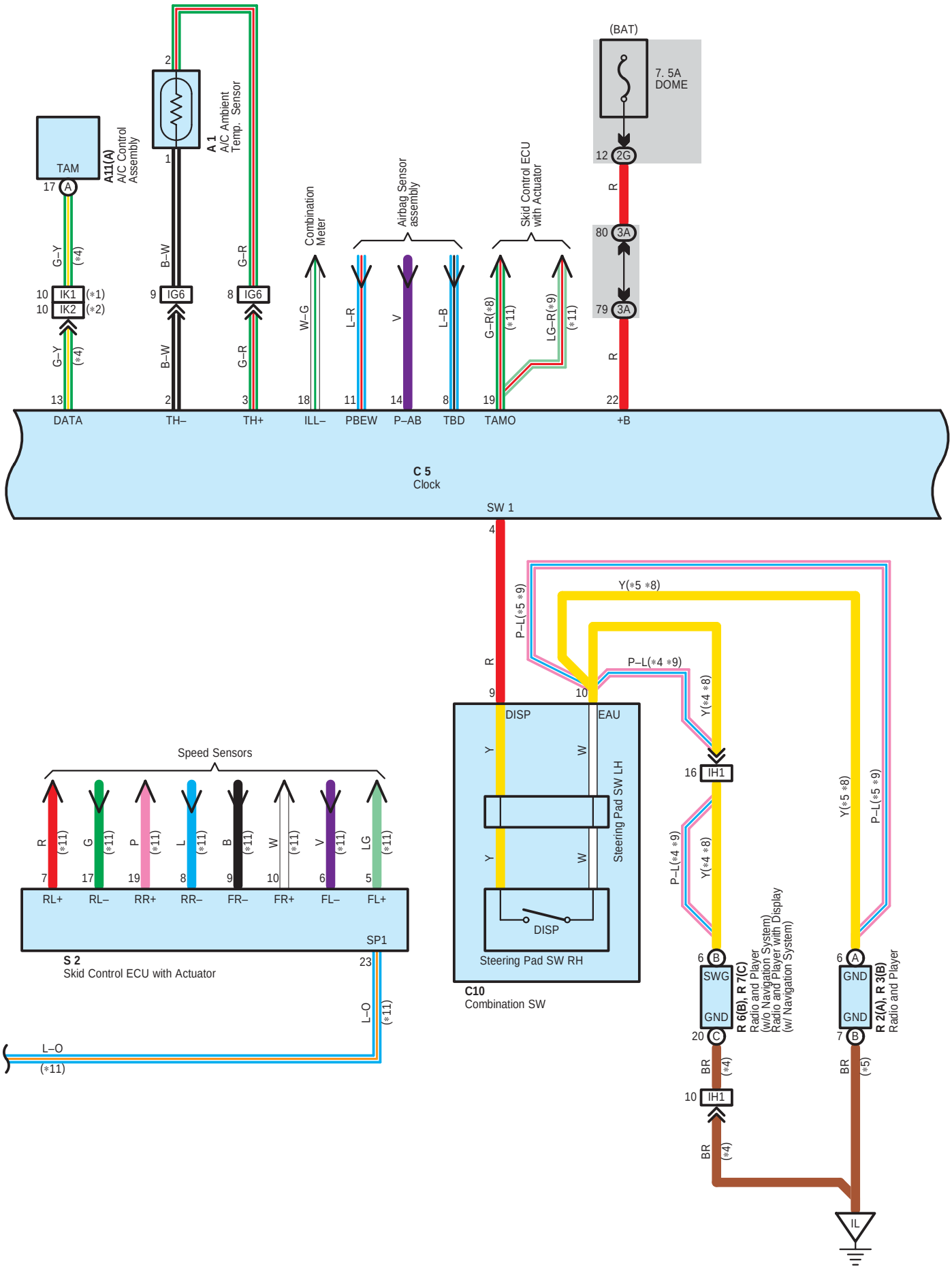
TAM
A11(A)
A/C Control Assembly
A 1
A/C Ambient Temp. Sensor
Combination Meter
Airbag Sensor assembly
Skid Control ECU with Actuator
(BAT)
7. 5A DOME
DATA
TH–
TH+
ILL–
PBEW
P–AB
TBD
TAMO
+B
C 5
Clock
SW 1
Speed Sensors
RL+
RL–
RR+
RR–
FR–
FR+
FL–
FL+
SP1
S 2
Skid Control ECU with Actuator
DISP
EAU
Steering Pad SW LH
Steering Pad SW RH
C10
Combination SW
SWG
GND
R 6(B), R 7(C)
Radio and Player (w/o Navigation System)
Radio and Player with Display (w/ Navigation System)
R 2(A), R 3(B)
Radio and Player
IH1
IL

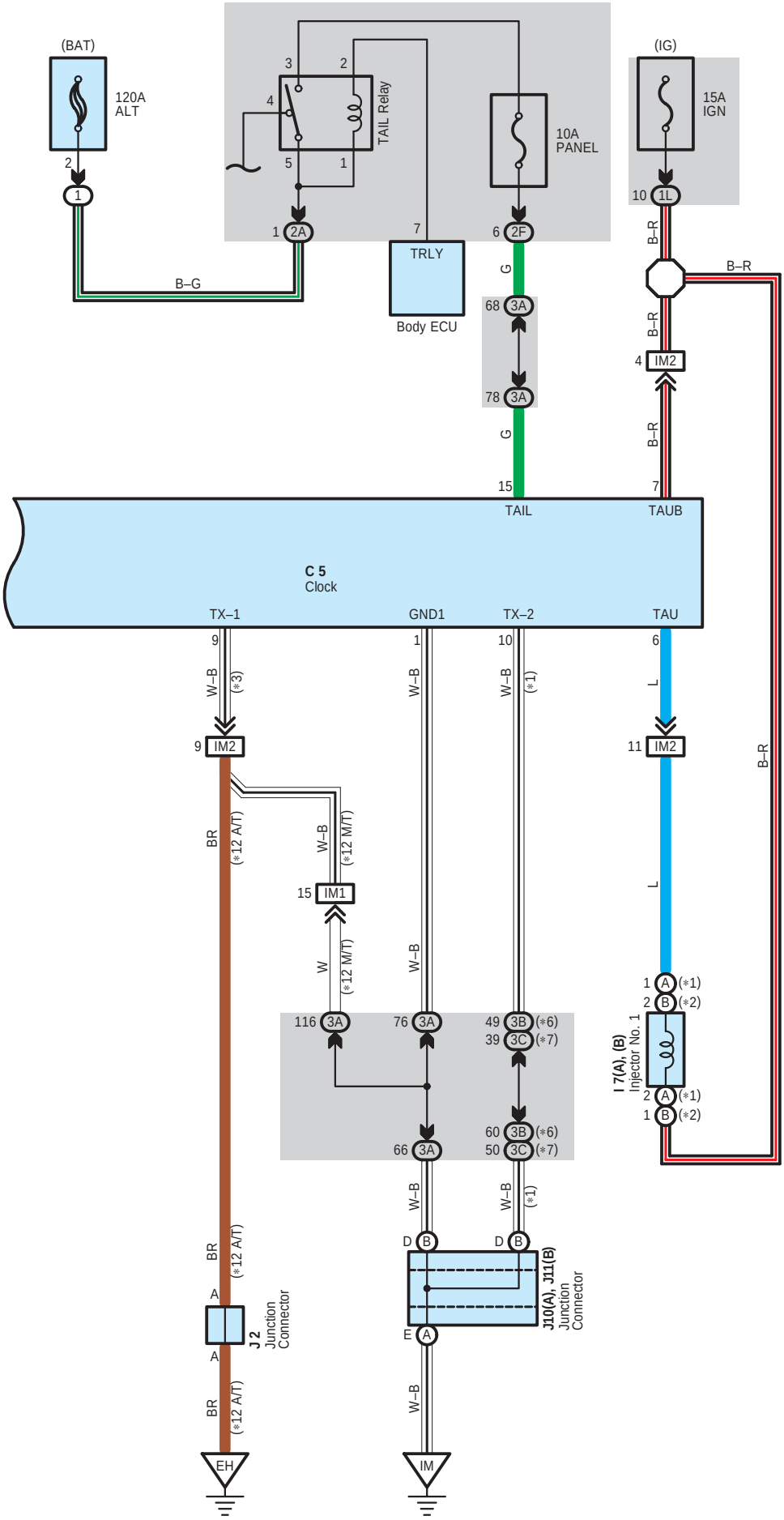

* 1 : 3MZ–FE
* 2 : 2AZ–FE
* 6 : C/P, Convertible w/ VSC
* 7 : Convertible w/o VSC
*12 : 2AZ–FE Manual A/C

○ : Parts Location

Code		See Page	Code		See Page	Code		See Page
A1		40 (3MZ–FE)	F8		48 (C/P)	R2	A	45 (C/P)
		42 (2AZ–FE)			50 (*1)			47 (*1)
A11	A	44 (C/P)	I7	A	41 (3MZ–FE)	R3	B	45 (C/P)
		46 (*1)		B	43 (2AZ–FE)			47 (*1)
C5		44 (C/P)	J2		45 (C/P)	R6	B	45 (C/P)
		46 (*1)			47 (*1)			47 (*1)
C7	A	44 (C/P)	J10	A	45 (C/P)	R7	C	45 (C/P)
		46 (*1)			47 (*1)			47 (*1)
C8	B	44 (C/P)	J11	B	45 (C/P)	S1		41 (3MZ–FE)
		46 (*1)			47 (*1)	S2		41 (3MZ–FE)
C10		44 (C/P)	J12	A	45 (C/P)			43 (2AZ–FE)
		46 (*1)		B	47 (*1)			

: Relay Blocks

Code	See Page	Relay Blocks (Relay Block Location)
1	24	Engine Room R/B (Engine Compartment Left)

: Junction Block and Wire Harness Connector

Code	See Page	Junction Block and Wire Harness (Connector Location)
1L	27	Engine Wire and Engine Room J/B (Engine Compartment Left)
2A	30	Engine Room Main Wire and Driver Side J/B (Lower Finish Panel)
2F	30	Instrument Panel Wire and Driver Side J/B (Lower Finish Panel)
2G	31	
2K	30	
3A	36 (*2)	Instrument Panel Wire and Passenger Side J/B (Instrument Panel Brace RH)
	37 (*3)	
3B	36 (*2)	
3C	37 (*3)	

: Connector Joining Wire Harness and Wire Harness

Code	See Page	Joining Wire Harness and Wire Harness (Connector Location)
IC1	56 (C/P)	Instrument Panel Wire and Floor No.1 Wire (Left Kick Panel)
	58 (*1)	
IF1	56 (C/P)	Instrument Panel Wire and Instrument Panel Wire (Instrument Panel Brace LH)
	58 (*1)	
IG6	56 (C/P)	Engine Room Main Wire and Instrument Panel Wire (Behind the Radio and Player)
	58 (*1)	
IG7	56 (C/P)	
	58 (*1)	
IG9	56 (C/P)	
IH1	57 (C/P)	Instrument Panel No.2 Wire and Instrument Panel Wire (Behind the Radio and Player)
	59 (*1)	
IK1	57 (C/P)	Instrument Panel Wire and Instrument Panel Wire (Instrument Panel Reinforcement RH)
	59 (*1)	
IK2	57 (C/P)	
IM1	57 (C/P)	Engine Wire and Instrument Panel Wire (Behind the Glove Box)
	59 (*1)	
IM2	57 (C/P)	
	59 (*1)	

* 1 : Convertible * 2 : C/P, Convertible w/ VSC * 3 : Convertible w/o VSC

▽ : **Ground Points**

Code	See Page	Ground Points Location
EH	55 (2AZ–FE)	Left Side of Cylinder Head
IJ	56 (C/P)	Instrument Panel Brace LH
	58 (*1)	
IL	56 (C/P)	Instrument Panel Brace RH
	58 (*1)	
IM	56 (C/P)	Instrument Panel Reinforcement RH
	58 (*1)	

* 1 : Convertible * 2 : C/P, Convertible w/ VSC * 3 : Convertible w/o VSC

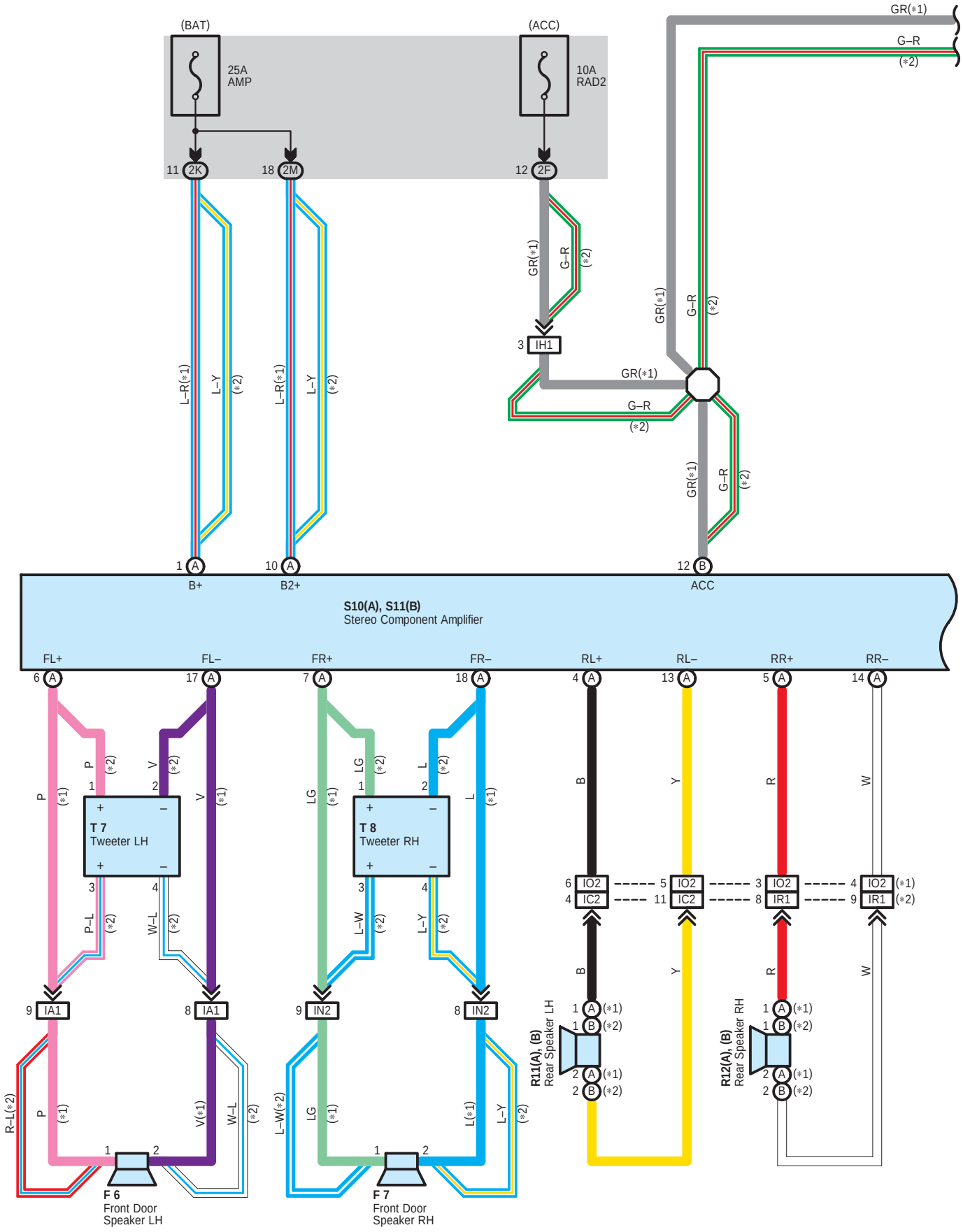
(BAT)
(ACC)
25A
AMP
10A
RAD2
11 2K
18 2M
12 2F
GR(*1)
G–R
(*2)
L–R(*1)
L–Y
3 IH1
1 A
B+
10 A
B2+
12 B
ACC
S10(A), S11(B)
Stereo Component Amplifier
FL+
FL–
FR+
FR–
RL+
RL–
RR+
RR–
T 7
Tweeter LH
T 8
Tweeter RH
IA1
IN2
IO2
IC2
IR1
R11(A), (B)
Rear Speaker LH
R12(A), (B)
Rear Speaker RH
R–L(*2)
L–W(*2)
F 6
Front Door
Speaker LH
F 7
Front Door
Speaker RH

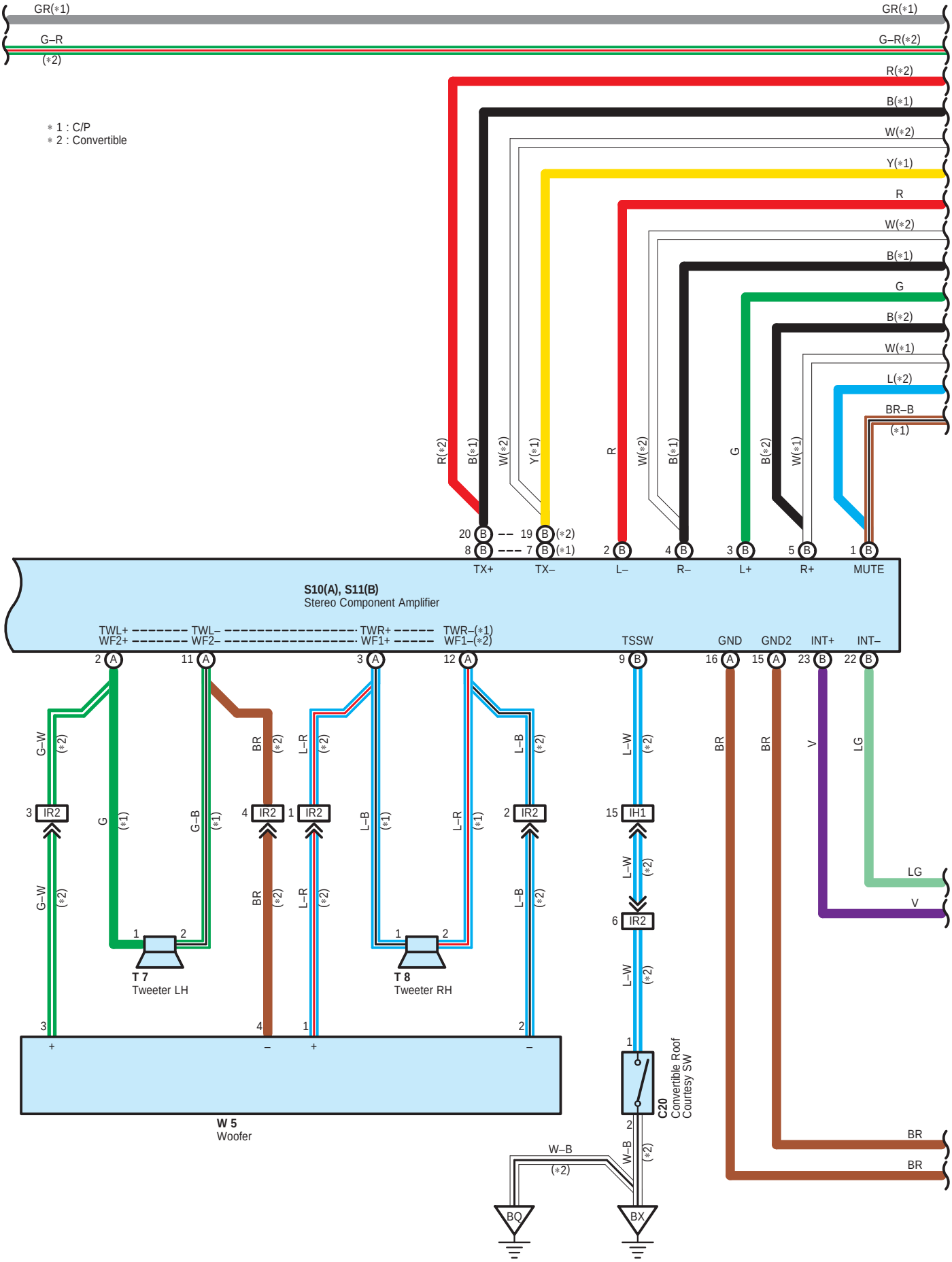
GR(*1)
G–R
(*2)
* 1 : C/P
* 2 : Convertible
R(*2)
B(*1)
W(*2)
Y(*1)
R
W(*2)
B(*1)
G
B(*2)
W(*1)
L(*2)
BR–B
(*1)
20 B
8 B
19 B (*2)
7 B (*1)
2 B
4 B
3 B
5 B
1 B
TX+
TX–
L–
R–
L+
R+
MUTE
S10(A), S11(B)
Stereo Component Amplifier
TWL+
WF2+
TWL–
WF2–
TWR+
WF1+
TWR–(*1)
WF1–(*2)
TSSW
GND
GND2
INT+
INT–
2 A
11 A
3 A
12 A
9 B
16 A
15 A
23 B
22 B
G–W
G
G–B
BR
L–R
L–B
L–W
V
LG
3 IR2
4 IR2
1 IR2
2 IR2
15 IH1
6 IR2
T 7
Tweeter LH
T 8
Tweeter RH
W 5
Woofer
C20
Convertible Roof
Courtesy SW
W–B
BQ
BX

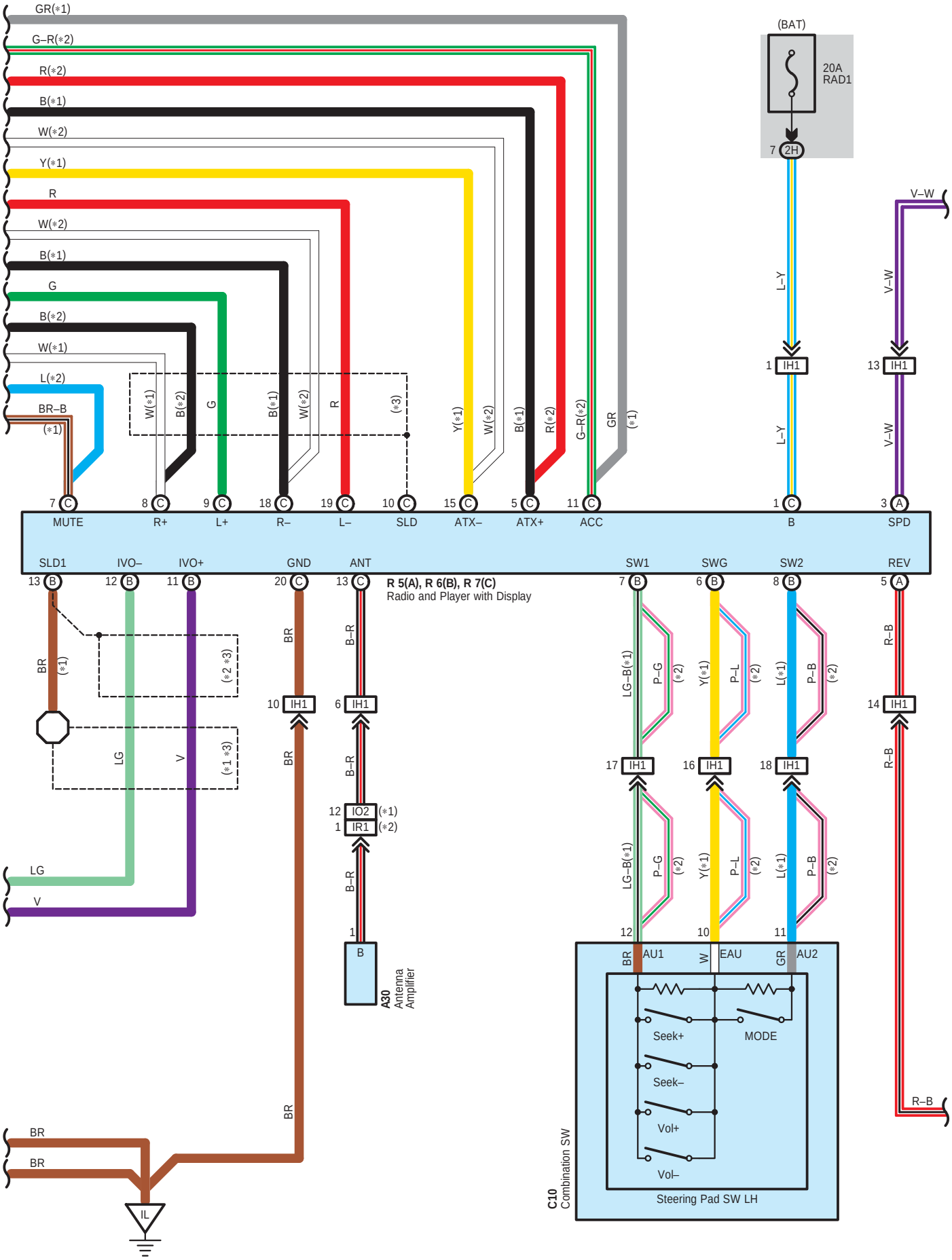
GR(*1)
G–R(*2)
R(*2)
B(*1)
W(*2)
Y(*1)
R
W(*2)
B(*1)
G
B(*2)
W(*1)
L(*2)
BR–B
(*1)
(BAT)
20A
RAD1
7 2H
L–Y
V–W
1 IH1
13 IH1
7 C MUTE
8 C R+
9 C L+
18 C R–
19 C L–
10 C SLD
15 C ATX–
5 C ATX+
11 C ACC
1 C B
3 A SPD
SLD1
IVO–
IVO+
GND
ANT
SW1
SWG
SW2
REV
13 B
12 B
11 B
20 C
13 C
R 5(A), R 6(B), R 7(C)
Radio and Player with Display
7 B
6 B
8 B
5 A
BR
B–R
R–B
(*1)
(*2 *3)
(*1 *3)
10 IH1
6 IH1
14 IH1
LG
V
12 IO2 (*1)
1 IR1 (*2)
LG–B(*1)
P–G
(*2)
Y(*1)
P–L
L(*1)
P–B
17 IH1
16 IH1
18 IH1
1
B
A30
Antenna
Amplifier
12
10
11
BR
AU1
W
EAU
GR
AU2
Seek+
MODE
Seek–
Vol+
Vol–
C10
Combination SW
Steering Pad SW LH
IL

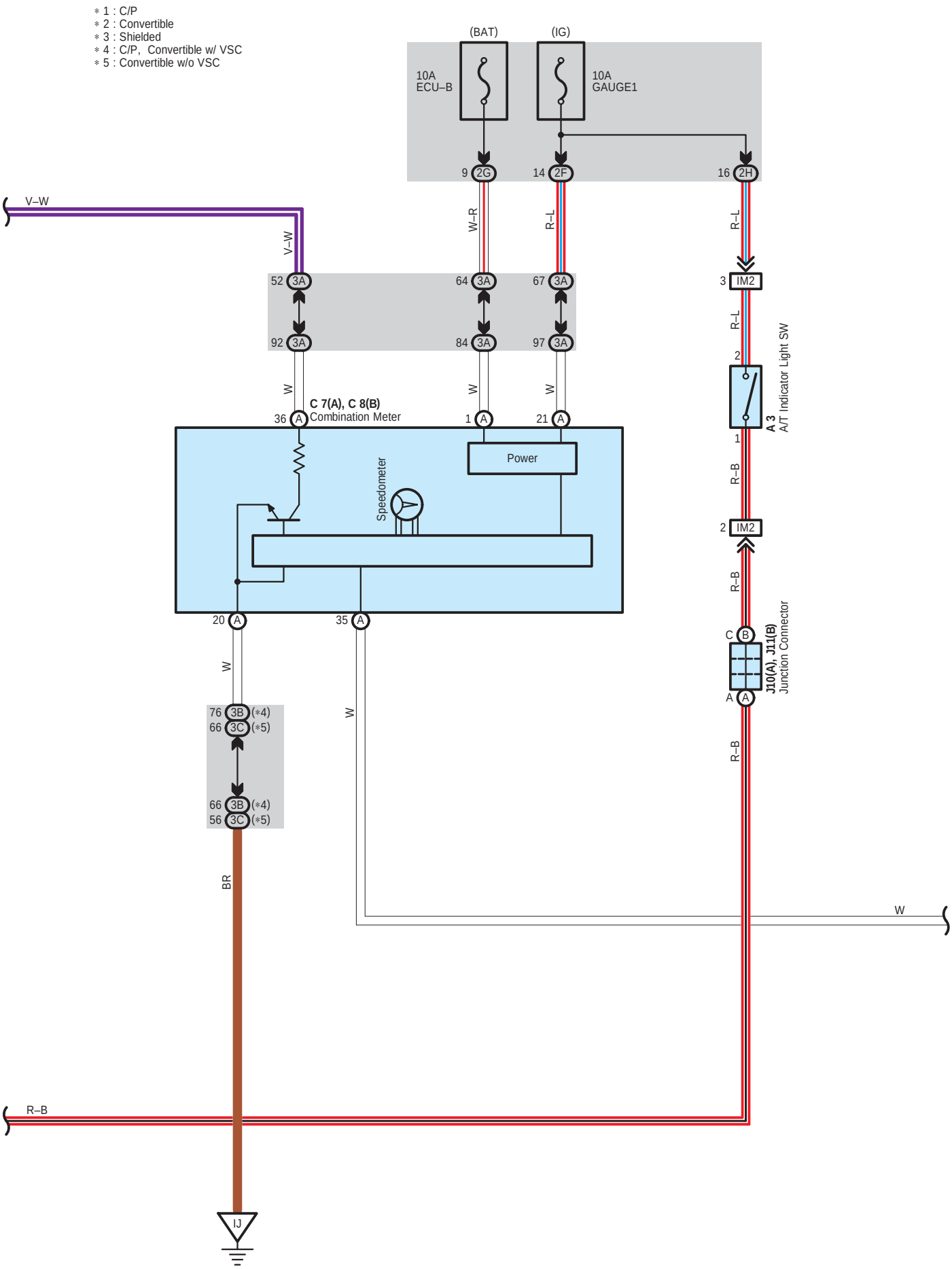
* 1 : C/P
* 2 : Convertible
* 3 : Shielded
* 4 : C/P, Convertible w/ VSC
* 5 : Convertible w/o VSC
(BAT)
(IG)
10A
ECU–B
10A
GAUGE1
9 2G
14 2F
16 2H
V–W
W–R
R–L
52 3A
64 3A
67 3A
92 3A
84 3A
97 3A
3 IM2
2
A 3
A/T Indicator Light SW
1
W
C 7(A), C 8(B)
Combination Meter
36 A
1 A
21 A
Power
Speedometer
R–B
2 IM2
20 A
35 A
C B
J10(A), J11(B)
Junction Connector
A A
76 3B (*4)
66 3C (*5)
66 3B (*4)
56 3C (*5)
BR
IJ

∗ 4 : C/P, Convertible w/ VSC
∗ 5 : Convertible w/o VSC
∗ 6 : w/ VSC
∗ 7 : w/o VSC
∗ 8 : 3MZ–FE
∗ 9 : 2AZ–FE

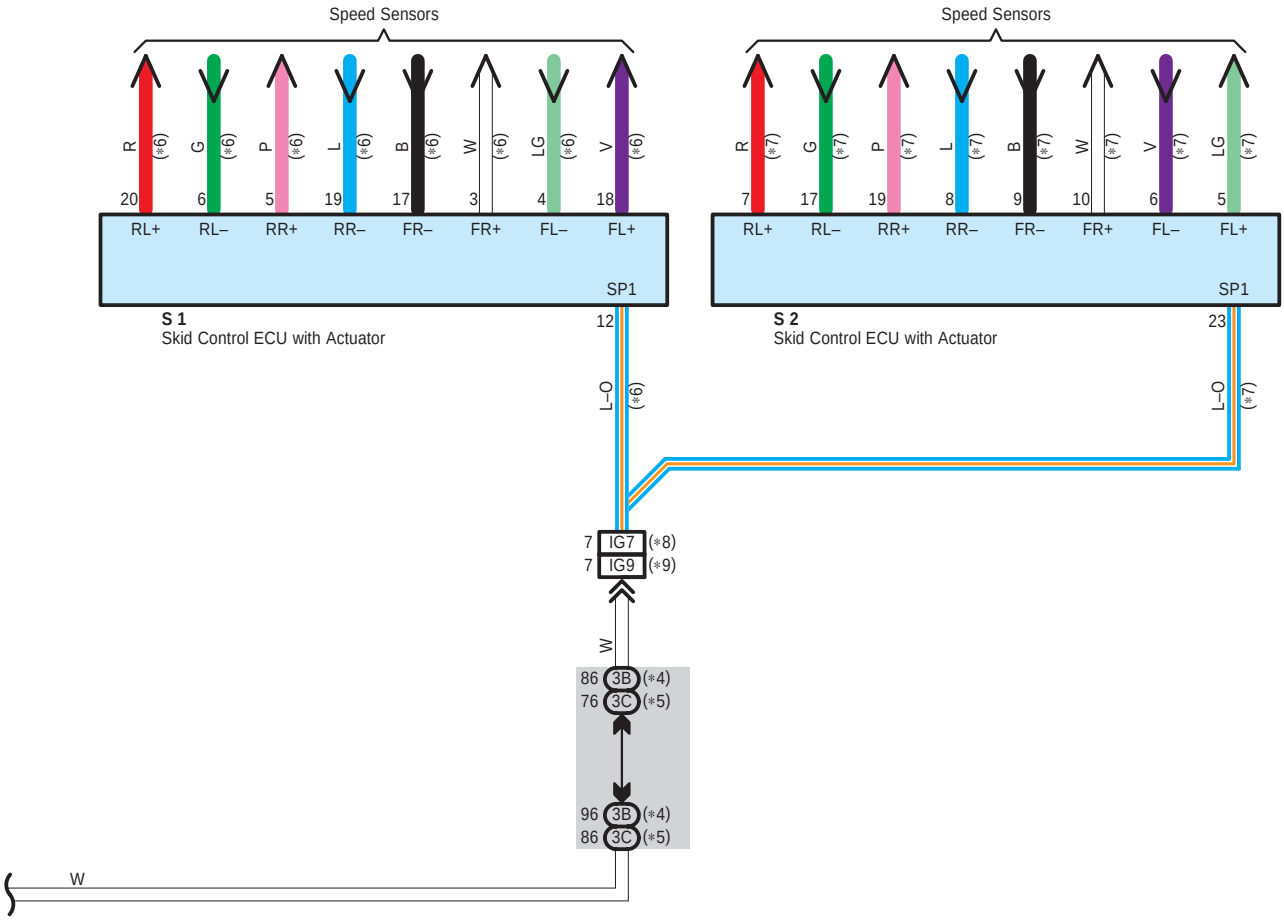

System Outline

The navigation system displays the operating status and instructions for the radio and player. Additionally, the navigation system precisely measures the current vehicle position, displays the map obtained from the map database on the screen, and informs the route to the destination shown on the map using voice guidance.

○ : Parts Location

Code		See Page	Code		See Page	Code		See Page
A3		40 (3MZ–FE)	F7		50 (*1)	R12	B	51 (*1)
		42 (2AZ–FE)	J10	A	45 (C/P)	S1		41 (3MZ–FE)
A30		48 (C/P)			47 (*1)	S2		41 (3MZ–FE)
		50 (*1)	J11	B	45 (C/P)			43 (2AZ–FE)
C7	A	44 (C/P)			47 (*1)	S10	A	45 (C/P)
		46 (*1)	R5	A	45 (C/P)			47 (*1)
C8	B	44 (C/P)			47 (*1)	S11	B	45 (C/P)
		46 (*1)	R6	B	45 (C/P)			47 (*1)
C10		44 (C/P)			47 (*1)	T7		45 (C/P)
		46 (*1)	R7	C	45 (C/P)			47 (*1)
C20		50 (*1)			47 (*1)	T8		45 (C/P)
F6		48 (C/P)	R11	A	49 (C/P)			47 (*1)
		50 (*1)		B	51 (*1)	W5		51 (*1)
F7		48 (C/P)	R12	A	49 (C/P)			

: Junction Block and Wire Harness Connector

Code	See Page	Junction Block and Wire Harness (Connector Location)
2F	30	Instrument Panel Wire and Driver Side J/B (Lower Finish Panel)
2G	31	
2H		
2K	30	
2M		
3A	36 (*2)	Instrument Panel Wire and Passenger Side J/B (Instrument Panel Brace RH)
	37 (*3)	
3B	36 (*2)	
3C	37 (*3)	

: Connector Joining Wire Harness and Wire Harness

Code	See Page	Joining Wire Harness and Wire Harness (Connector Location)
IA1	56 (C/P)	Front Door LH Wire and Instrument Panel Wire (Left Kick Panel)
	58 (*1)	
IC2	58 (*1)	Instrument Panel Wire and Floor No.1 Wire (Left Kick Panel)
IG7	56 (C/P)	Engine Room Main Wire and Instrument Panel Wire (Behind the Radio and Player)
	58 (*1)	
IG9	56 (C/P)	
IH1	57 (C/P)	Instrument Panel No.2 Wire and Instrument Panel Wire (Behind the Radio and Player)
	59 (*1)	
IM2	57 (C/P)	Engine Wire and Instrument Panel Wire (Behind the Glove Box)
	59 (*1)	
IN2	57 (C/P)	Front Door RH Wire and Instrument Panel Wire (Right Kick Panel)
	59 (*1)	
IO2	57 (C/P)	Instrument Panel Wire and Floor No.2 Wire (Right Kick Panel)
IR1	59 (*1)	
IR2		

* 1 : Convertible * 2 : C/P, Convertible w/ VSC * 3 : Convertible w/o VSC

▽ : **Ground Points**

Code	See Page	Ground Points Location
IJ	56 (C/P)	Instrument Panel Brace LH
	58 (*1)	
IL	56 (C/P)	Instrument Panel Brace RH
	58 (*1)	
BQ	61 (*1)	Under the Front Passenger's Seat
BX	61 (*1)	Under the Right Center Piller

* 1 : Convertible * 2 : C/P, Convertible w/ VSC * 3 : Convertible w/o VSC

Audio System for Separate Type Amplifier without Navigation

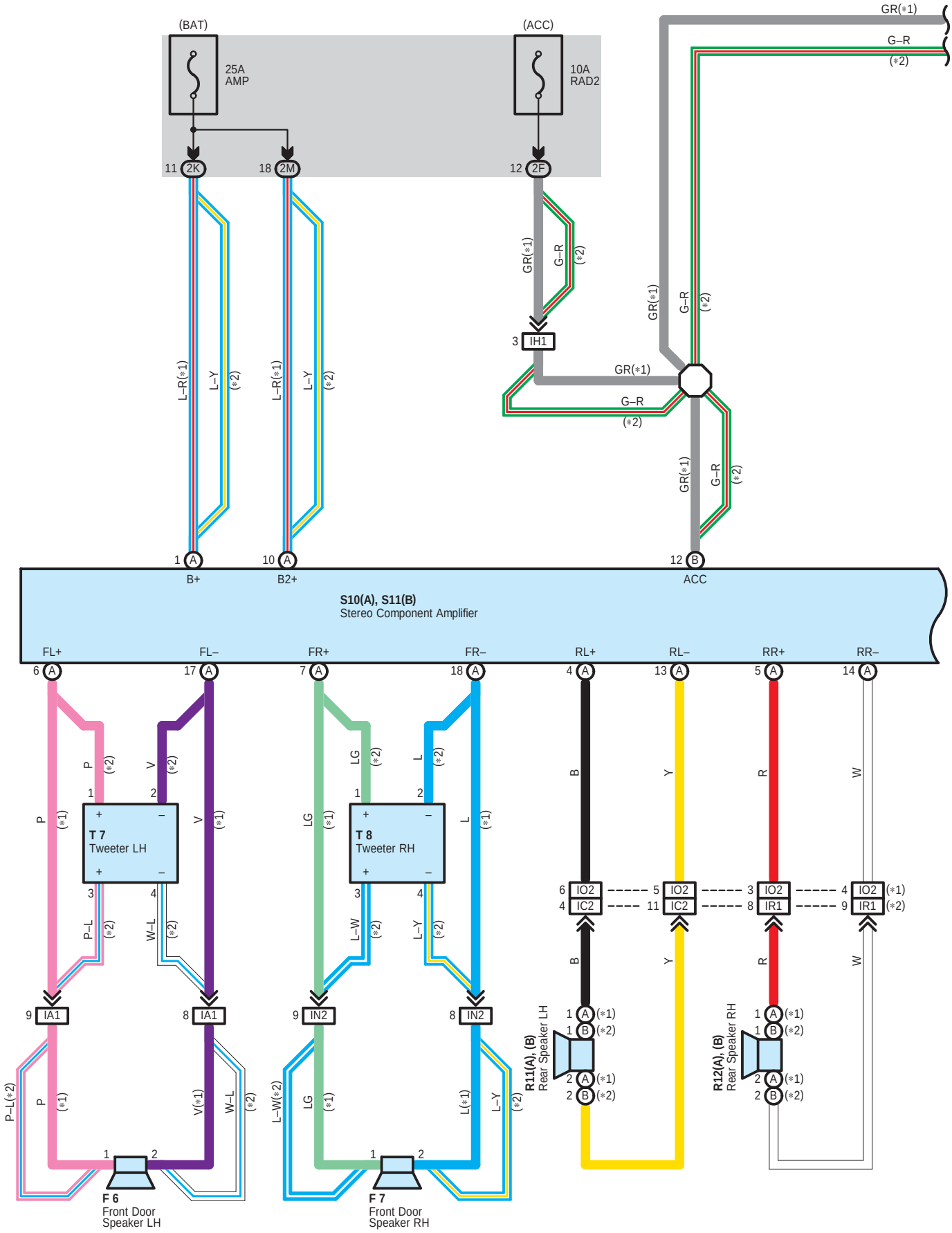

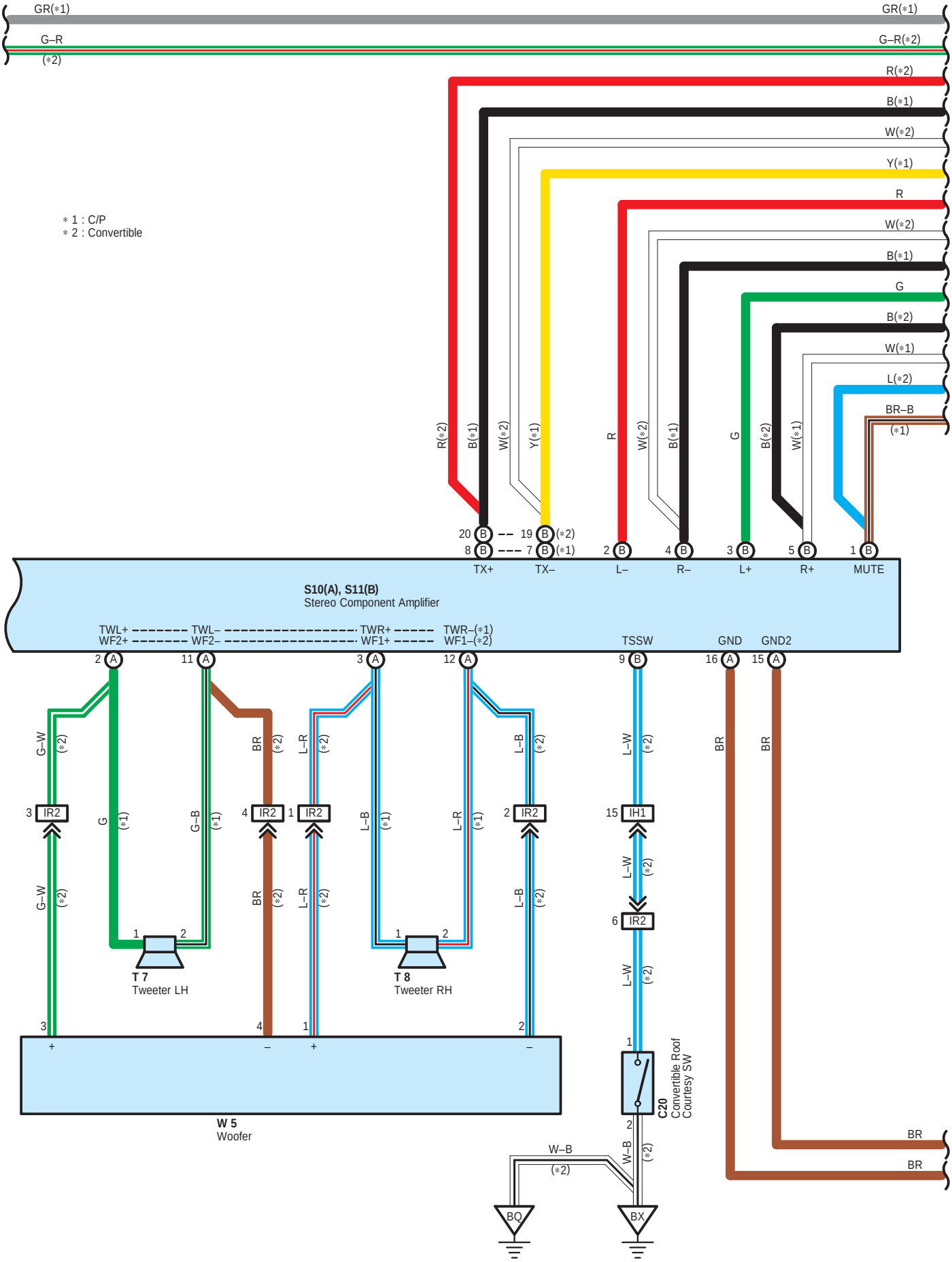
GR(*1)
G–R
(*2)
GR(*1)
G–R(*2)
R(*2)
B(*1)
W(*2)
Y(*1)
R
W(*2)
B(*1)
G
B(*2)
W(*1)
L(*2)
BR–B
(*1)
* 1 : C/P
* 2 : Convertible
20 B
8 B
19 B (*2)
7 B (*1)
2 B
4 B
3 B
5 B
1 B
TX+
TX–
L–
R–
L+
R+
MUTE
S10(A), S11(B)
Stereo Component Amplifier
TWL+
WF2+
TWL–
WF2–
TWR+
WF1+
TWR–(*1)
WF1–(*2)
TSSW
GND
GND2
2 A
11 A
3 A
12 A
9 B
16 A
15 A
IR2
IH1
T 7
Tweeter LH
T 8
Tweeter RH
W 5
Woofer
C20
Convertible Roof
Courtesy SW
W–B
(*2)
BQ
BX
BR
BR

Audio System for Separate Type Amplifier without Navigation

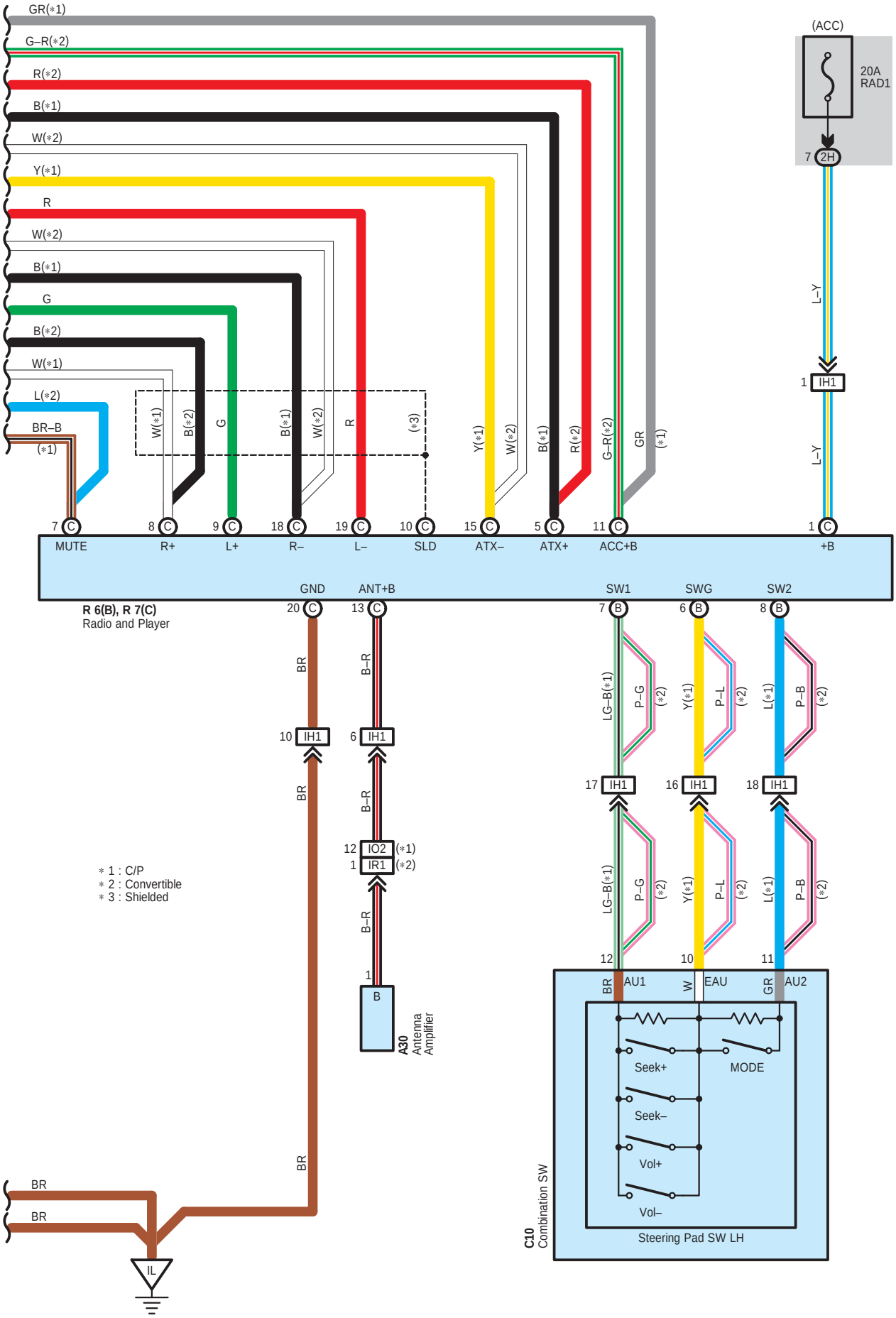

: Parts Location

Code	See Page	Code		See Page	Code		See Page
A30	48 (C/P)	R6	B	45 (C/P)	S10	A	47 (*1)
	50 (*1)			47 (*1)	S11	B	45 (C/P)
C10	44 (C/P)	R7	C	45 (C/P)			47 (*1)
	46 (*1)			47 (*1)	T7		45 (C/P)
C20	50 (*1)	R11	A	49 (C/P)			47 (*1)
F6	48 (C/P)		B	51 (*1)	T8		45 (C/P)
	50 (*1)	R12	A	49 (C/P)			47 (*1)
F7	48 (C/P)		B	51 (*1)	W5		51 (*1)
	50 (*1)	S10	A	45 (C/P)			

: Junction Block and Wire Harness Connector

Code	See Page	Junction Block and Wire Harness (Connector Location)
2F	30	Instrument Panel Wire and Driver Side J/B (Lower Finish Panel)
2H	31	
2K	30	
2M		

: Connector Joining Wire Harness and Wire Harness

Code	See Page	Joining Wire Harness and Wire Harness (Connector Location)
IA1	56 (C/P)	Front Door LH Wire and Instrument Panel Wire (Left Kick Panel)
	58 (*1)	
IC2	58 (*1)	Instrument Panel Wire and Floor No.1 Wire (Left Kick Panel)
IH1	57 (C/P)	Instrument Panel No.2 Wire and Instrument Panel Wire (Behind the Radio and Player)
	59 (*1)	
IN2	57 (C/P)	Front Door RH Wire and Instrument Panel Wire (Right Kick Panel)
	59 (*1)	
IO2	57 (C/P)	Instrument Panel Wire and Floor No.2 Wire (Right Kick Panel)
IR1	59 (*1)	
IR2		

: Ground Points

Code	See Page	Ground Points Location
IL	56 (C/P)	Instrument Panel Brace RH
	58 (*1)	
BQ	61 (*1)	Under the Front Passenger's Seat
BX	61 (*1)	Under the Right Center Piller

* 1 : Convertible * 2 : C/P, Convertible w/ VSC * 3 : Convertible w/o VSC

Audio System for Built–In Type Amplifier

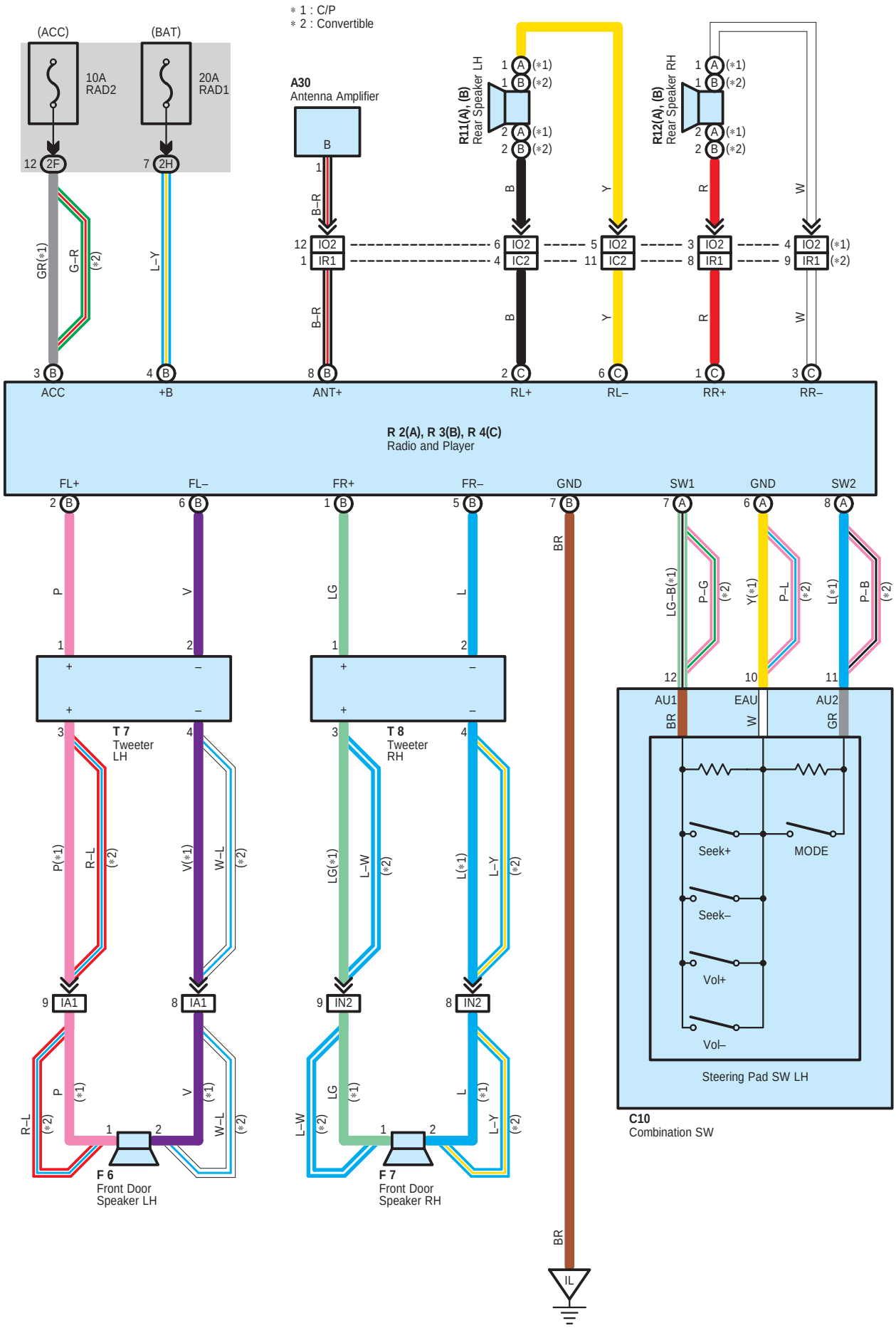

: Parts Location

Code	See Page	Code		See Page	Code		See Page
A30	48 (C/P)	R2	A	45 (C/P)	R12	A	49 (C/P)
	50 (*1)			47 (*1)		B	51 (*1)
C10	44 (C/P)	R3	B	45 (C/P)	T7		45 (C/P)
	46 (*1)			47 (*1)			47 (*1)
F6	48 (C/P)	R4	C	45 (C/P)	T8		45 (C/P)
	50 (*1)			47 (*1)			47 (*1)
F7	48 (C/P)	R11	A	49 (C/P)			
	50 (*1)		B	51 (*1)			

: Junction Block and Wire Harness Connector

Code	See Page	Junction Block and Wire Harness (Connector Location)
2F	30	Instrument Panel Wire and Driver Side J/B (Lower Finish Panel)
2H	31	

: Connector Joining Wire Harness and Wire Harness

Code	See Page	Joining Wire Harness and Wire Harness (Connector Location)
IA1	56 (C/P)	Front Door LH Wire and Instrument Panel Wire (Left Kick Panel)
	58 (*1)	
IC2	58 (*1)	Instrument Panel Wire and Floor No.1 Wire (Left Kick Panel)
IN2	57 (C/P)	Front Door RH Wire and Instrument Panel Wire (Right Kick Panel)
	59 (*1)	
IO2	57 (C/P)	Instrument Panel Wire and Floor No.2 Wire (Right Kick Panel)
IR1	59 (*1)	

: Ground Points

Code	See Page	Ground Points Location
IL	56 (C/P)	Instrument Panel Brace RH
	58 (*1)	

* 1 : Convertible * 2 : C/P, Convertible w/ VSC * 3 : Convertible w/o VSC

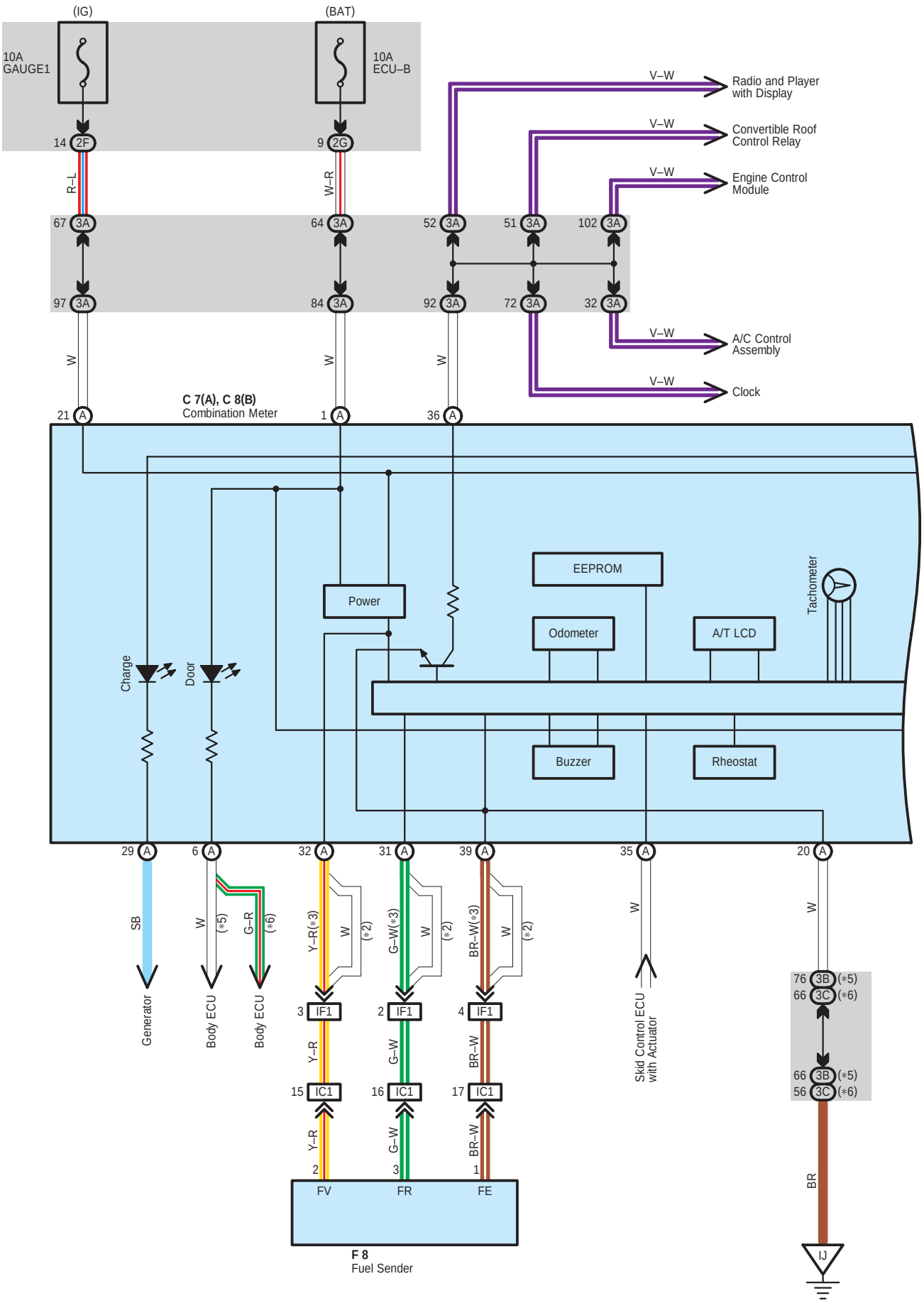
(IG)
(BAT)
10A
GAUGE1
10A
ECU–B
14 2F
9 2G
R–L
W–R
67 3A
64 3A
52 3A
51 3A
102 3A
97 3A
84 3A
92 3A
72 3A
32 3A
V–W
Radio and Player
with Display
Convertible Roof
Control Relay
Engine Control
Module
A/C Control
Assembly
Clock
W
C 7(A), C 8(B)
Combination Meter
21 A
1 A
36 A
Power
EEPROM
Odometer
A/T LCD
Tachometer
Charge
Door
Buzzer
Rheostat
29 A
6 A
32 A
31 A
39 A
35 A
20 A
SB
G–R
(*5)
(*6)
Y–R(*3)
G–W(*3)
BR–W(*3)
(*2)
Generator
Body ECU
Body ECU
Skid Control ECU
with Actuator
3 IF1
2 IF1
4 IF1
Y–R
G–W
BR–W
15 IC1
16 IC1
17 IC1
2
3
1
FV
FR
FE
F 8
Fuel Sender
76 3B (*5)
66 3C (*6)
66 3B (*5)
56 3C (*6)
BR
IJ

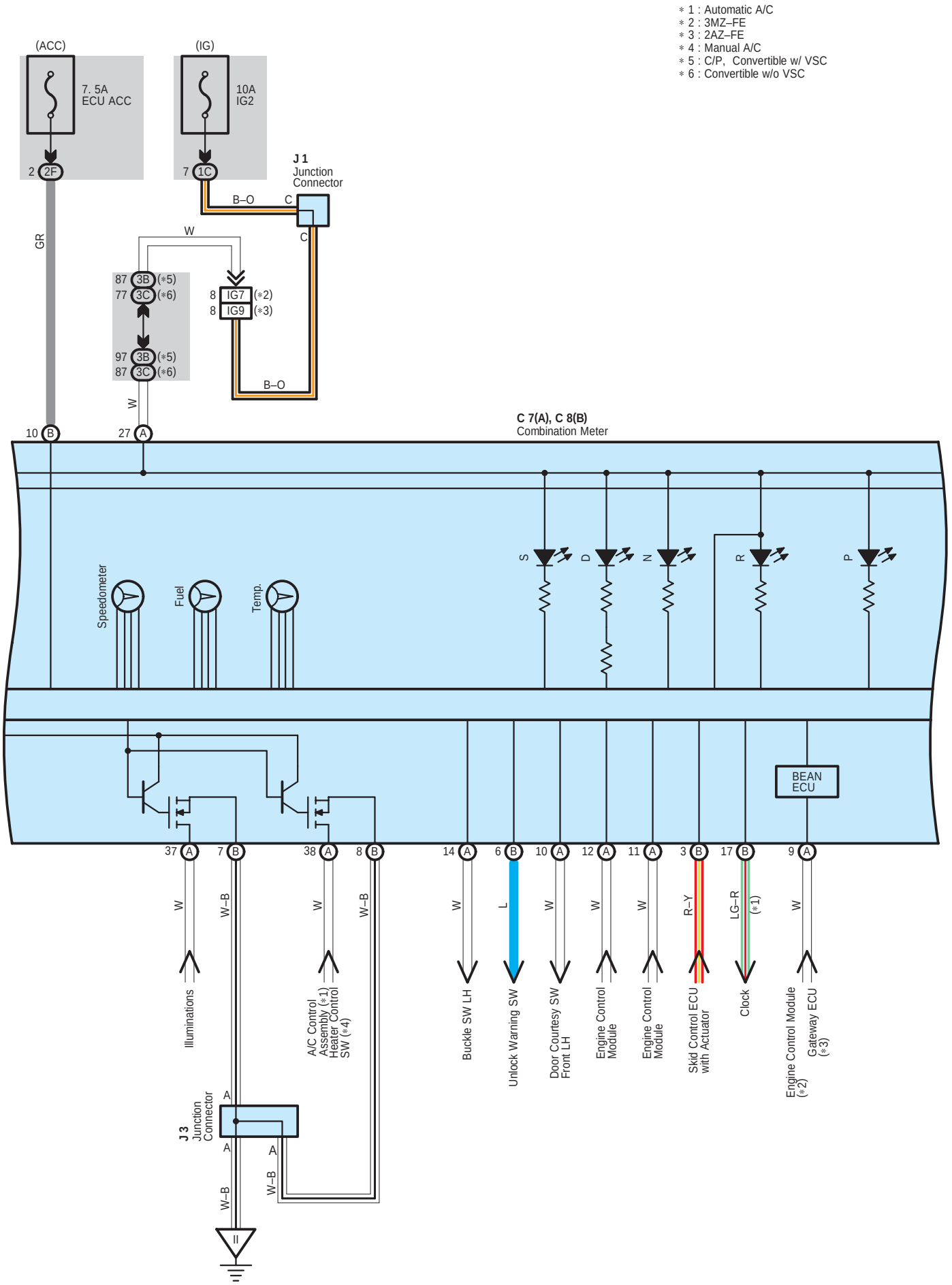
∗1 : Automatic A/C
∗2 : 3MZ–FE
∗3 : 2AZ–FE
∗4 : Manual A/C
∗5 : C/P, Convertible w/ VSC
∗6 : Convertible w/o VSC
(ACC)
7. 5A
ECU ACC
(IG)
10A
IG2
J 1
Junction
Connector
B–O
C
W
GR
87 3B (∗5)
77 3C (∗6)
97 3B (∗5)
87 3C (∗6)
8 IG7 (∗2)
8 IG9 (∗3)
B–O
W
10 B
27 A
C 7(A), C 8(B)
Combination Meter
Speedometer
Fuel
Temp.
S
D
N
R
P
BEAN
ECU
37 A
7 B
38 A
8 B
14 A
6 B
10 A
12 A
11 A
3 B
17 B
9 A
W
W–B
W
W–B
W
L
W
W
W
R–Y
LG–R
(∗1)
W
Illuminations
A/C Control
Assembly (∗1)
Heater Control
SW (∗4)
Buckle SW LH
Unlock Warning SW
Door Courtesy SW
Front LH
Engine Control
Module
Engine Control
Module
Skid Control ECU
with Actuator
Clock
Engine Control Module
(∗2)
Gateway ECU
(∗3)
J 3
Junction
Connector
A
A
A
W–B
W–B

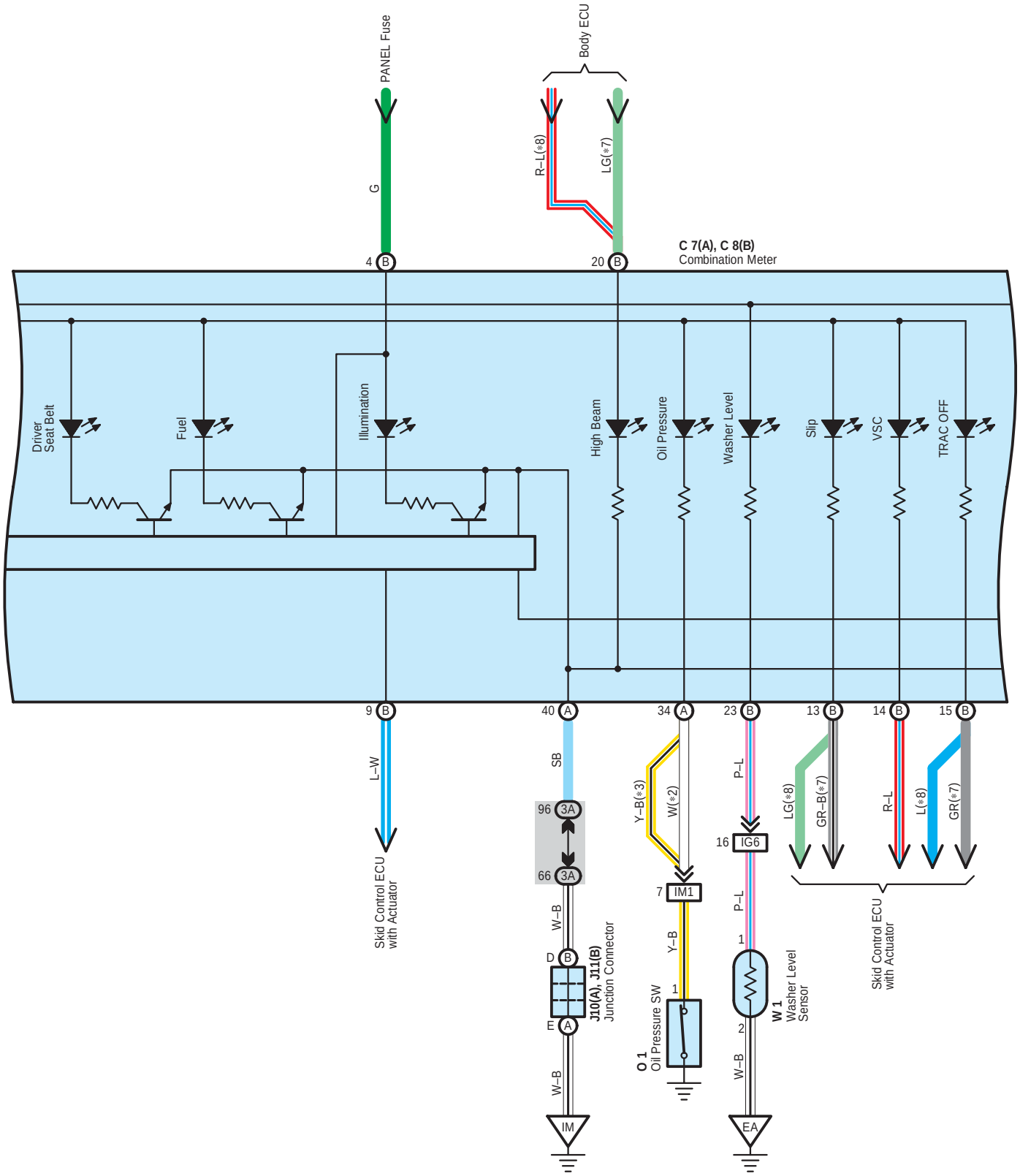
PANEL Fuse
G
Body ECU
R–L(*8)
LG(*7)
4 B
20 B
C 7(A), C 8(B)
Combination Meter
Driver Seat Belt
Fuel
Illumination
High Beam
Oil Pressure
Washer Level
Slip
VSC
TRAC OFF
9 B
40 A
34 A
23 B
13 B
14 B
15 B
L–W
Skid Control ECU with Actuator
SB
96 3A
66 3A
W–B
D B
E A
J10(A), J11(B) Junction Connector
W–B
IM
Y–B(*3)
W(*2)
7 IM1
Y–B
1
O 1 Oil Pressure SW
P–L
16 IG6
P–L
1
2
W 1 Washer Level Sensor
W–B
EA
LG(*8)
GR–B(*7)
R–L
L(*8)
GR(*7)
Skid Control ECU with Actuator

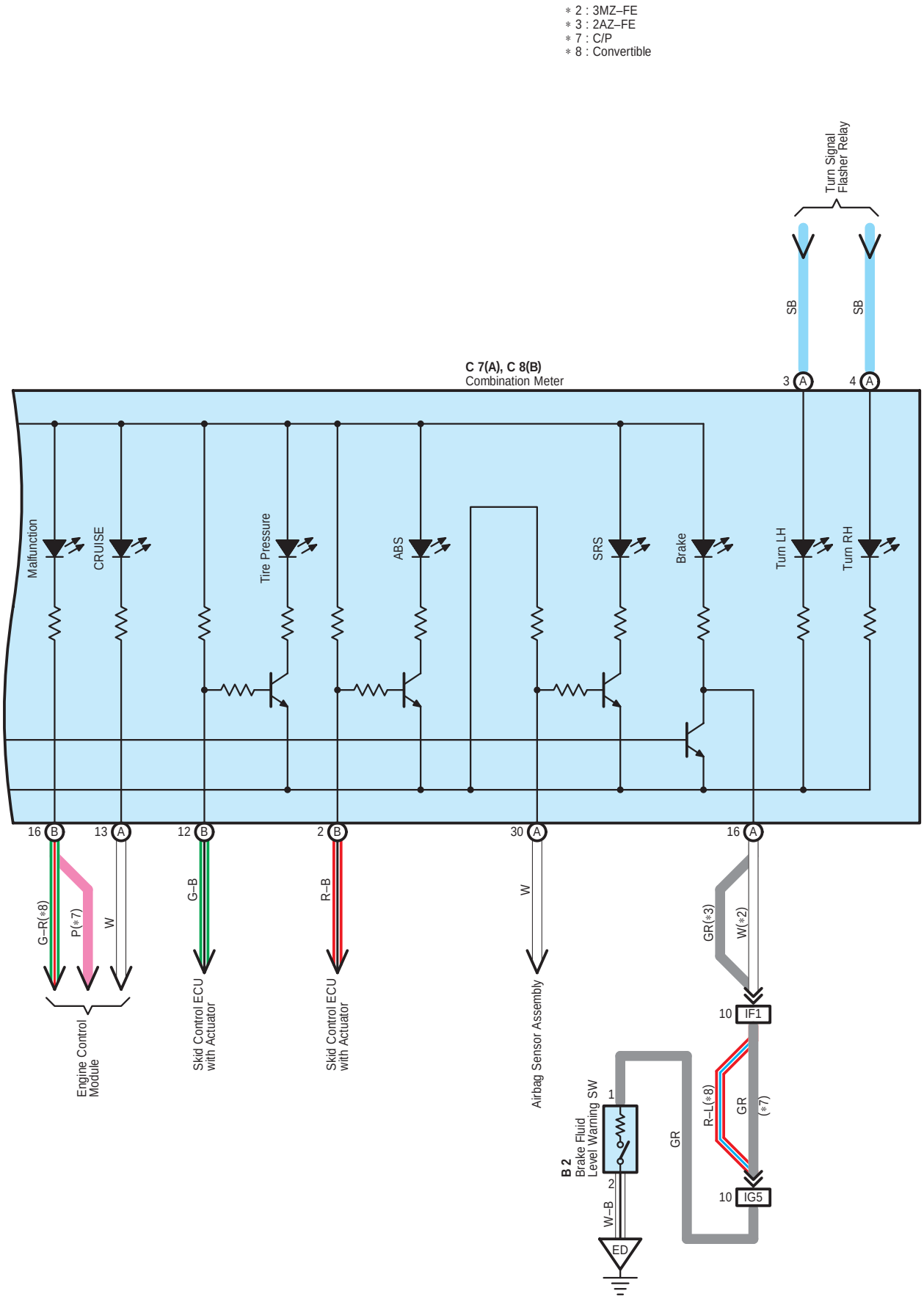
* 2 : 3MZ–FE
* 3 : 2AZ–FE
* 7 : C/P
* 8 : Convertible
Turn Signal Flasher Relay
SB
SB
C 7(A), C 8(B)
Combination Meter
3 A
4 A
Malfunction
CRUISE
Tire Pressure
ABS
SRS
Brake
Turn LH
Turn RH
16 B
13 A
12 B
2 B
30 A
16 A
G–R(*8)
P(*7)
W
G–B
R–B
W
GR(*3)
W(*2)
Engine Control Module
Skid Control ECU with Actuator
Skid Control ECU with Actuator
Airbag Sensor Assembly
10 IF1
B 2
Brake Fluid Level Warning SW
1
2
W–B
ED
GR
R–L(*8)
GR
(*7)
10 IG5

Combination Meter

○ : **Parts Location**

Code		See Page	Code		See Page	Code		See Page
B2		40 (3MZ–FE)	F8		50 (*1)	J11	B	45 (C/P)
		42 (2AZ–FE)	J1		45 (C/P)			47 (*1)
C7	A	44 (C/P)			47 (*1)	O1		41 (3MZ–FE)
		46 (*1)	J3		45 (C/P)			43 (2AZ–FE)
C8	B	44 (C/P)			47 (*1)	W1		41 (3MZ–FE)
		46 (*1)	J10	A	45 (C/P)			43 (2AZ–FE)
F8		48 (C/P)			47 (*1)			

: **Junction Block and Wire Harness Connector**

Code	See Page	Junction Block and Wire Harness (Connector Location)
1C	27	Engine Room Main Wire and Engine Room J/B (Engine Compartment Left)
2F	30	Instrument Panel Wire and Driver Side J/B (Lower Finish Panel)
2G	31	
3A	36 (*2)	Instrument Panel Wire and Passenger Side J/B (Instrument Panel Brace RH)
	37 (*3)	
3B	36 (*2)	
3C	37 (*3)	

: **Connector Joining Wire Harness and Wire Harness**

Code	See Page	Joining Wire Harness and Wire Harness (Connector Location)
IC1	56 (C/P)	Instrument Panel Wire and Floor No.1 Wire (Left Kick Panel)
	58 (*1)	
IF1	56 (C/P)	Instrument Panel Wire and Instrument Panel Wire (Instrument Panel Brace LH)
	58 (*1)	
IG5	56 (C/P)	Engine Room Main Wire and Instrument Panel Wire (Behind the Radio and Player)
	58 (*1)	
IG6	56 (C/P)	
	58 (*1)	
IG7	56 (C/P)	
	58 (*1)	
IG9	56 (C/P)	
IM1	57 (C/P)	Engine Wire and Instrument Panel Wire (Behind the Glove Box)
	59 (*1)	

▽ : **Ground Points**

Code	See Page	Ground Points Location
EA	54 (3MZ–FE)	Right Fender
	55 (2AZ–FE)	
ED	54 (3MZ–FE)	Left Fender
	55 (2AZ–FE)	
II	56 (C/P)	Cowl Side Panel LH
	58 (*1)	
IJ	56 (C/P)	Instrument Panel Brace LH
	58 (*1)	
IM	56 (C/P)	Instrument Panel Reinforcement RH
	58 (*1)	

* 1 : Convertible * 2 : C/P, Convertible w/ VSC * 3 : Convertible w/o VSC

Radiator Fan and Condenser Fan

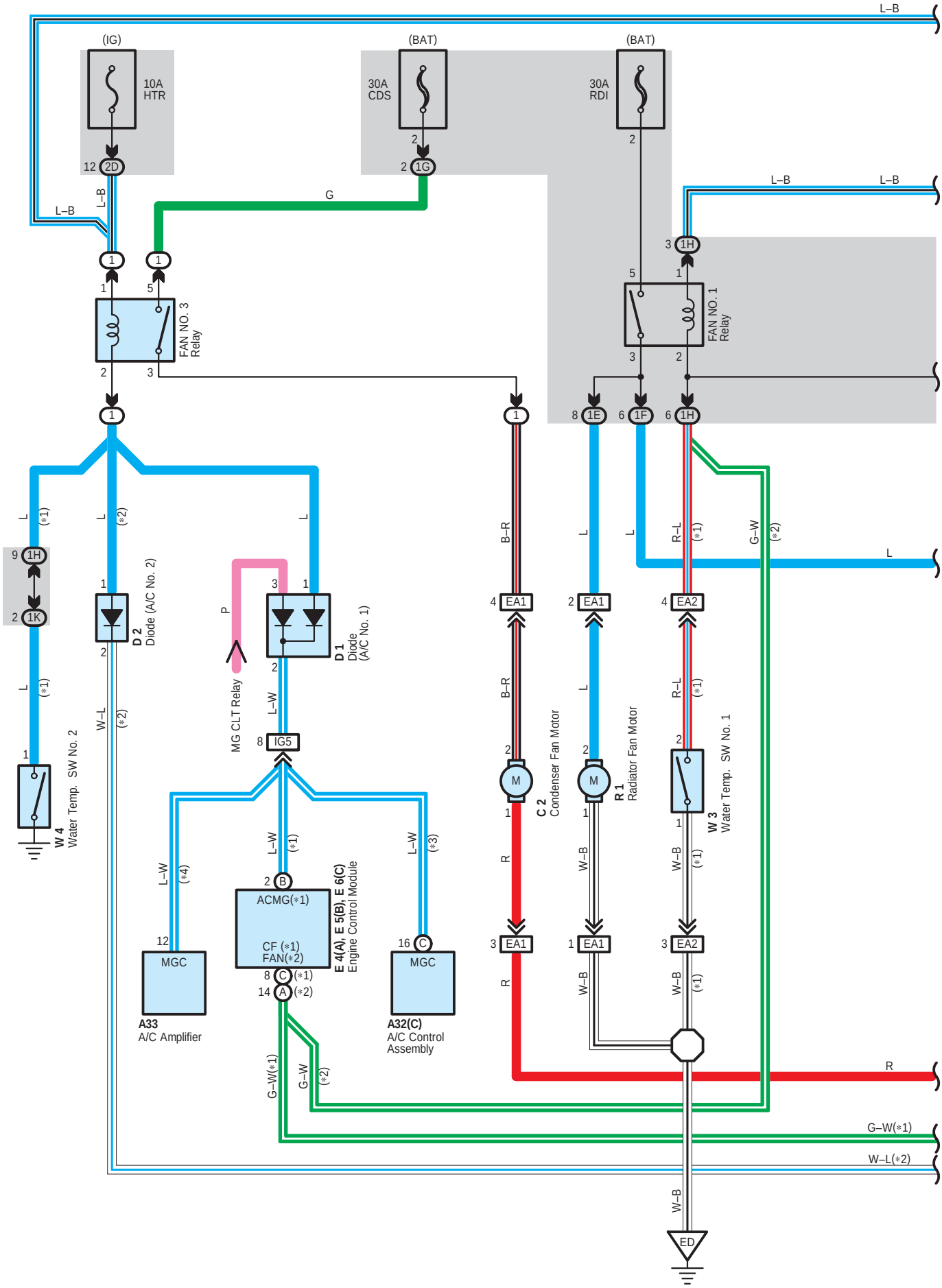

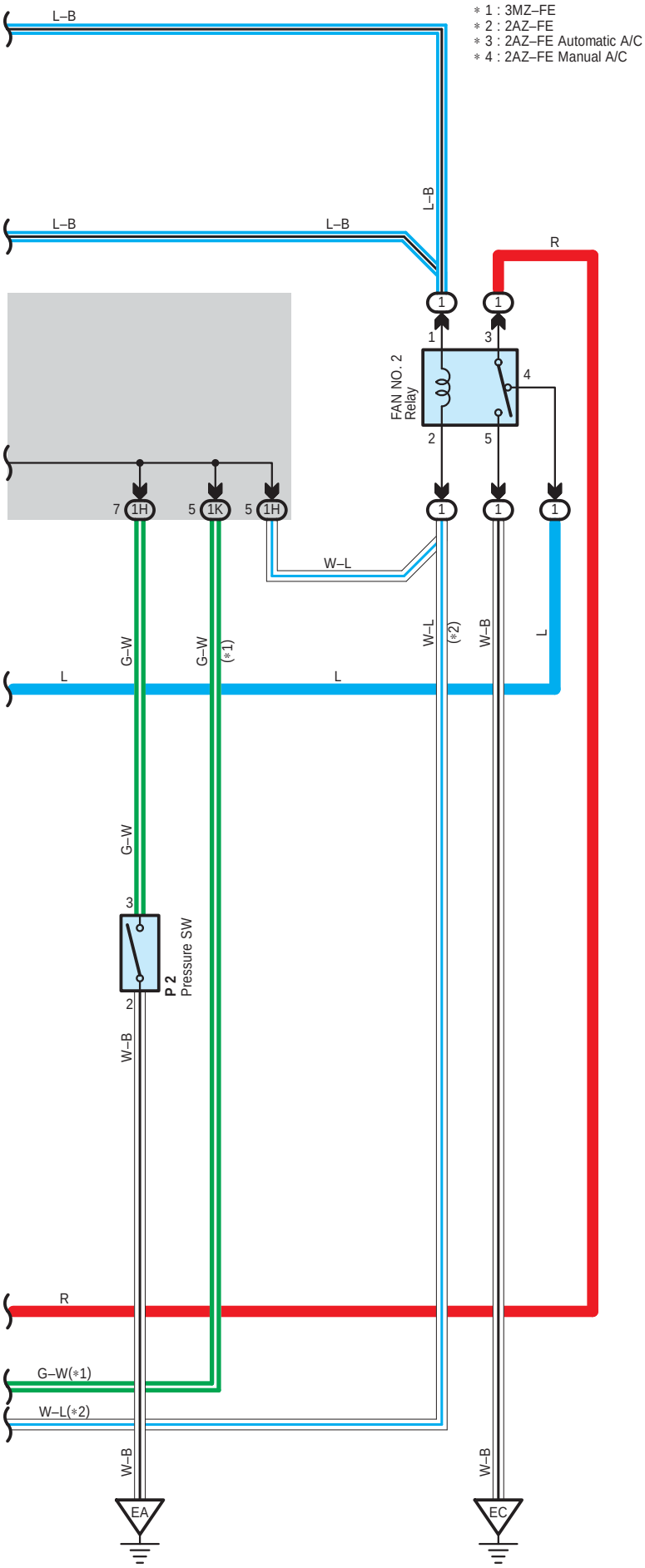
∗ 1 : 3MZ–FE
∗ 2 : 2AZ–FE
∗ 3 : 2AZ–FE Automatic A/C
∗ 4 : 2AZ–FE Manual A/C
L–B
L–B
L–B
L–B
R
FAN NO. 2 Relay
1
3
4
2
5
7 1H
5 1K
5 1H
W–L
G–W
G–W
(∗1)
W–L
(∗2)
W–B
L
L
L
G–W
3
P 2
Pressure SW
2
W–B
R
G–W(∗1)
W–L(∗2)
W–B
W–B
EA
EC

System Outline

Fan Motor Operation (3MZ–FE)

With the ignition SW turned on, the current through the HTR fuse flows to the FAN NO.1 relay (Coil side), FAN NO.2 relay (Coil side) and FAN NO.3 relay (Coil side).

1. Low Speed Operation

Only when the A/C system is activated or the water temp. SW No.2 is turned on, the condenser fan motor and the radiator fan motor rotates at low speed.

When the A/C system is activated, the current from HTR fuse flows to the FAN NO.3 relay (Coil side) to TERMINAL 1 of the diode (A/C No.1) to TERMINAL 2 to TERMINAL (B) 2 of the engine control module causing the FAN NO.3 relay to turn on. As a result, the current through the CDS fuse flows to TERMINAL 5 of the FAN NO.3 relay to TERMINAL 3 to TERMINAL 2 of the condenser fan motor to TERMINAL 1 to TERMINAL 3 of the FAN NO.2 relay to TERMINAL 4 to TERMINAL 2 of the radiator fan motor to TERMINAL 1 to GROUND. As this flowing in series for the motors, the motors rotate at low speed.

When the water temp. SW No.2 is turned on, the current from HTR fuse flows to the FAN NO.3 relay (Coil side) to TERMINAL 1 of the water temp. SW No.2 to GROUND, causing the FAN NO.3 relay to turn on. As a result, the current through the CDS fuse flows the same route as above, rotating the motors at low speed.

2. High Speed Operation

With the pressure SW is turned on and/or the water temp. SW No.1 is turned on, the A/C condenser fan motor and the radiator fan motor rotate at high speed.

When the pressure SW is turned on, the current through the HTR fuse flows to the FAN NO.1 and NO.2 relay (Coil side) to TERMINAL 3 of the pressure SW to TERMINAL 2 to GROUND, and the current through the HTR fuse flows to the FAN NO.3 relay (Coil side) to TERMINAL 1 of the water termp. SW No.2 to GROUND. As a result, FAN NO.1, NO.2. and NO.3 relay is turned on. At the same time, the current from the RDI fuse flows to FAN NO.1 relay (Point side) to TERMINAL 2 of the radiator fan motor to TERMINAL 1 to GROUND, and the current from the CDS fuse flows to FAN NO.3 relay (Point side) to TERMINAL 2 of the condenser fan motor to TERMINAL 1 to TERMINAL 3 of the FAN NO.2 relay to TERMINAL 5 to GROUND.

As the current flowing in parallel for motors as above, the motors rotate at high speed.

When the water temp. SW No.1 is turned on, the current through the HTR fuse flows to the FAN NO.1 and NO.2 relay (Coil side) to TERMINAL 2 of the water temp. SW No.1 to TERMINAL 1 to GROUND, and the current through the HTR fuse flows to the FAN NO.3 relay (Coil side) to TERMINAL 1 of the water temp. SW No.2 to GROUND. As a result, FAN NO.1, NO.2 and NO.3 relay is turned on. At the same time, the current from the RDI fuse flows to FAN NO.1 relay (Point side) to TERMINAL 2 of the radiator fan motor to TERMINAL 1 to GROUND, and the current from the CDS fuse flows to FAN NO.3 relay (Point side) to TERMINAL 2 of the condenser fan motor to TERMINAL 1 to TERMINAL 3 of the FAN NO.2 relay to TERMINAL 5 to GROUND.

As the current flowing in parallel for motors as above, the motors rotate at high speed.

Fan Motor Operation (2AZ–FE)

With the ignition SW turned on, the current through the HTR fuse flows to the FAN NO.1 relay (Coil side), FAN NO.2 relay (Coil side) and FAN NO.3 relay (Coil side).

1. Low Speed Operation

When the ignition SW is turned on and the A/C system is activated, the condenser fan motor and the radiator fan motor rotates at low speed.

When the A/C system is activated, the current from HTR fuse flows to the FAN NO.3 relay (Coil side) to TERMINAL 1 of the diode (A/C No.1) to TERMINAL 2 to TERMINAL (C) 16 of the A/C control assembly (Automatic A/C) or TERMINAL 12 of the A/C amplifier (Manual A/C) causing the FAN NO.3 relay to turn on. As a result, the current through the CDS fuse flows to TERMINAL 5 of the FAN NO.3 relay to TERMINAL 3 to TERMINAL 2 of the condenser fan motor to TERMINAL 1 to TERMINAL 3 of the FAN NO.2 relay to TERMINAL 4 to TERMINAL 2 of the radiator fan motor to TERMINAL 1 to GROUND. As this flowing in series for the motors, the motors rotate at low speed.

2. High Speed Operation

When the pressure SW is turned on, the current through the HTR fuse flows to the FAN NO.1 and NO.2 relay (Coil side) to TERMINAL 3 of the pressure SW to TERMINAL 2 to GROUND, and the current through the HTR fuse flows to the FAN NO.3 relay (Coil side) to TERMINAL 1 of the diode (A/C No.2) to TERMINAL 2 to TERMINAL 3 of the pressure SW to TERMINAL 2 to GROUND. As a result, FAN NO.1, NO.2. and NO.3 relay is turned on. At the same time, the current from the RDI fuse flows to FAN NO.1 relay (Point side) to TERMINAL 2 of the radiator fan motor to TERMINAL 1 to GROUND, and the current from the CDS fuse flows to FAN NO.3 relay (Point side) to TERMINAL 2 of the condenser fan motor to TERMINAL 1 to TERMINAL 3 of the FAN NO.2 relay to TERMINAL 5 to GROUND.
As the current flowing in parallel for motors as above, the motors rotate at high speed.
When the engine coolant is too high, the current through the HTR fuse flows to the FAN NO.1 and NO.2 relay (Coil side) to TERMINAL (A) 14 of the engine control module to GROUND, and the current through the HTR fuse flows to the FAN NO.3 relay (Coil side) to TERMINAL 1 of the diode (A/C No.2) to TERMINAL 2 to TERMINAL (A) 14 of the engine control module to GROUND. As a result, FAN NO.1, NO.2 and NO.3 relay is turned on. At the same time, the current from the RDI fuse flows to FAN NO.1 relay (Point side) to TERMINAL 2 of the radiator fan motor to TERMINAL 1 to GROUND, and the current from the CDS fuse flows to FAN NO.3 relay (Point side) to TERMINAL 2 of the condenser fan motor to TERMINAL 1 to TERMINAL 3 of the FAN NO.2 relay to TERMINAL 5 to GROUND.
As the current flowing in parallel for motors as above, the motors rotate at high speed.

: Parts Location

Code	See Page	Code	See Page	Code	See Page
A32 C	44 (C/P)	D2	42 (2AZ–FE)	P2	41 (3MZ–FE)
A33	44 (C/P)	E4 A	44 (C/P)		43 (2AZ–FE)
C2	40 (3MZ–FE)	E5 B	44 (C/P)	R1	41 (3MZ–FE)
	42 (2AZ–FE)		46 (*1)		43 (2AZ–FE)
D1	40 (3MZ–FE)	E6 C	44 (C/P)	W3	41 (3MZ–FE)
	42 (2AZ–FE)		46 (*1)	W4	41 (3MZ–FE)

: Relay Blocks

Code	See Page	Relay Blocks (Relay Block Location)
1	24	Engine Room R/B (Engine Compartment Left)

: Junction Block and Wire Harness Connector

Code	See Page	Junction Block and Wire Harness (Connector Location)
1E	27	Engine Room Main Wire and Engine Room J/B (Engine Compartment Left)
1F		
1G		
1H		
1K	27	Engine Wire and Engine Room J/B (Engine Compartment Left)
2D	30	Engine Room Main Wire and Driver Side J/B (Lower Finish Panel)

: Connector Joining Wire Harness and Wire Harness

Code	See Page	Joining Wire Harness and Wire Harness (Connector Location)
EA1	54 (3MZ–FE)	Engine Room Main Wire and Engine Room No.2 Wire (Radiator Side Support LH)
	55 (2AZ–FE)	
EA2	54 (3MZ–FE)	
IG5	56 (C/P)	Engine Room Main Wire and Instrument Panel Wire (Behind the Radio and Player)
	58 (*1)	

* 1 : Convertible * 2 : C/P, Convertible w/ VSC * 3 : Convertible w/o VSC

▽ : **Ground Points**

Code	See Page	Ground Points Location
EA	54 (3MZ–FE)	Right Fender
	55 (2AZ–FE)	
EC	54 (3MZ–FE)	Left Fender
	55 (2AZ–FE)	
ED	54 (3MZ–FE)	
	55 (2AZ–FE)	

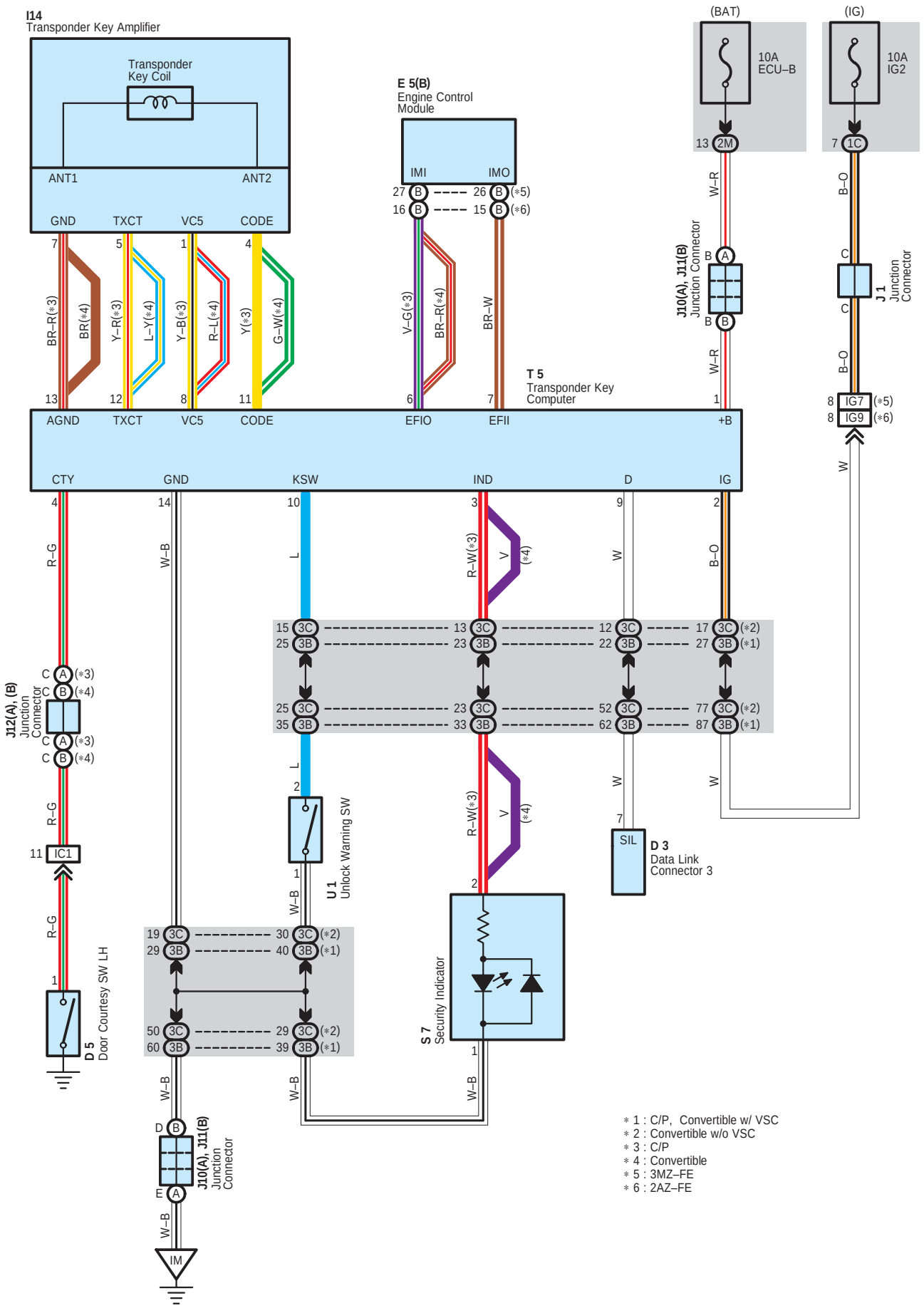
I14
Transponder Key Amplifier
Transponder Key Coil
ANT1
ANT2
GND
TXCT
VC5
CODE
E 5(B)
Engine Control Module
IMI
IMO
(BAT)
(IG)
10A ECU–B
10A IG2
J10(A), J11(B) Junction Connector
J 1 Junction Connector
T 5
Transponder Key Computer
AGND
EFIO
EFII
+B
IG7
IG9
CTY
KSW
IND
D
IG
J12(A), (B) Junction Connector
IC1
D 5 Door Courtesy SW LH
U 1 Unlock Warning SW
S 7 Security Indicator
SIL
D 3 Data Link Connector 3
IM
∗1 : C/P, Convertible w/ VSC
∗2 : Convertible w/o VSC
∗3 : C/P
∗4 : Convertible
∗5 : 3MZ–FE
∗6 : 2AZ–FE

: Parts Location

Code		See Page	Code		See Page	Code	See Page
D3		44 (C/P)	J1		45 (C/P)	S7	45 (C/P)
		46 (*1)			47 (*1)		47 (*1)
D5		48 (C/P)	J10	A	45 (C/P)	T5	45 (C/P)
		50 (*1)			47 (*1)		47 (*1)
E5	B	44 (C/P)	J11	B	45 (C/P)	U1	45 (C/P)
		46 (*1)			47 (*1)		47 (*1)
I14		45 (C/P)	J12	A	45 (C/P)		
		47 (*1)		B	47 (*1)		

: Junction Block and Wire Harness Connector

Code	See Page	Junction Block and Wire Harness (Connector Location)
1C	27	Engine Room Main Wire and Engine Room J/B (Engine Compartment Left)
2M	30	Instrument Panel Wire and Driver Side J/B (Lower Finish Panel)
3B	36 (*2)	Instrument Panel Wire and Passenger Side J/B (Instrument Panel Brace RH)
3C	37 (*3)	

: Connector Joining Wire Harness and Wire Harness

Code	See Page	Joining Wire Harness and Wire Harness (Connector Location)
IC1	56 (C/P)	Instrument Panel Wire and Floor No.1 Wire (Left Kick Panel)
	58 (*1)	
IG7	56 (C/P)	Engine Room Main Wire and Instrument Panel Wire (Behind the Radio and Player)
	58 (*1)	
IG9	56 (C/P)	

: Ground Points

Code	See Page	Ground Points Location
IM	56 (C/P)	Instrument Panel Reinforcement RH
	58 (*1)	

* 1 : Convertible * 2 : C/P, Convertible w/ VSC * 3 : Convertible w/o VSC

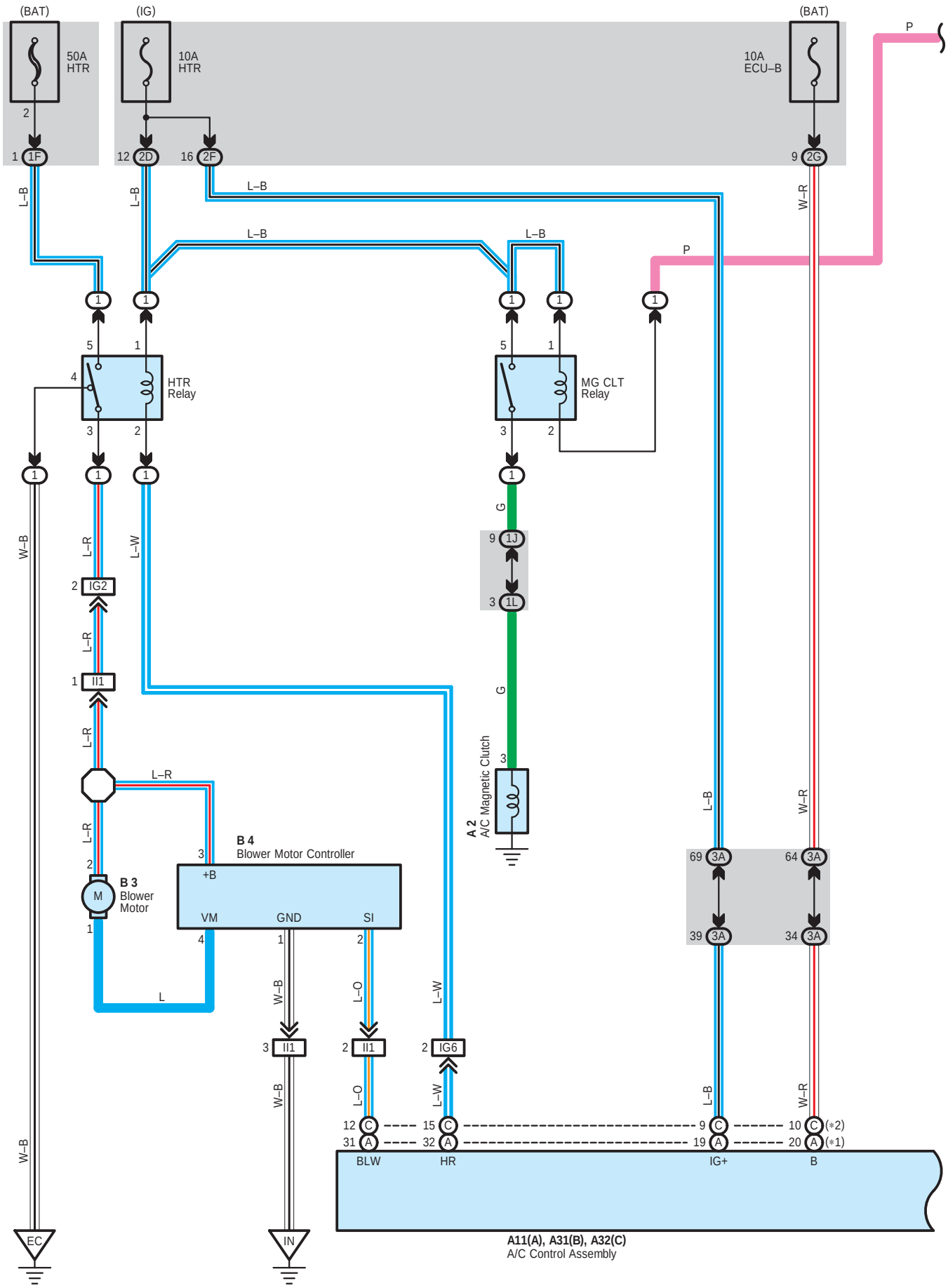
(BAT)
(IG)
(BAT)
50A
HTR
10A
HTR
10A
ECU–B
HTR
Relay
MG CLT
Relay
B 4
Blower Motor Controller
+B
VM
GND
SI
B 3
Blower
Motor
A 2
A/C Magnetic Clutch
BLW
HR
IG+
B
A11(A), A31(B), A32(C)
A/C Control Assembly
EC
IN

∗ 1 : 3MZ–FE
∗ 2 : 2AZ–FE

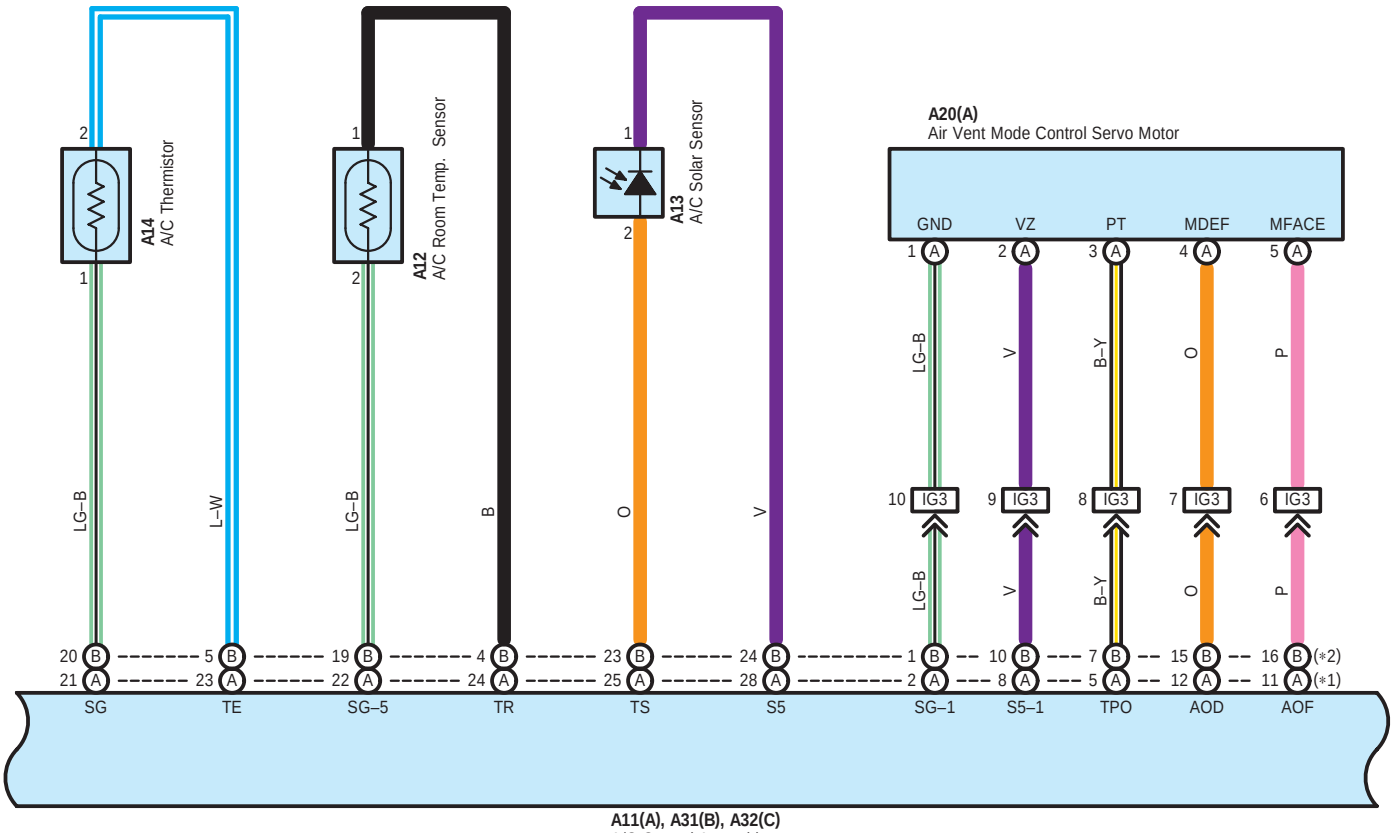

A11(A), A31(B), A32(C)
A/C Control Assembly

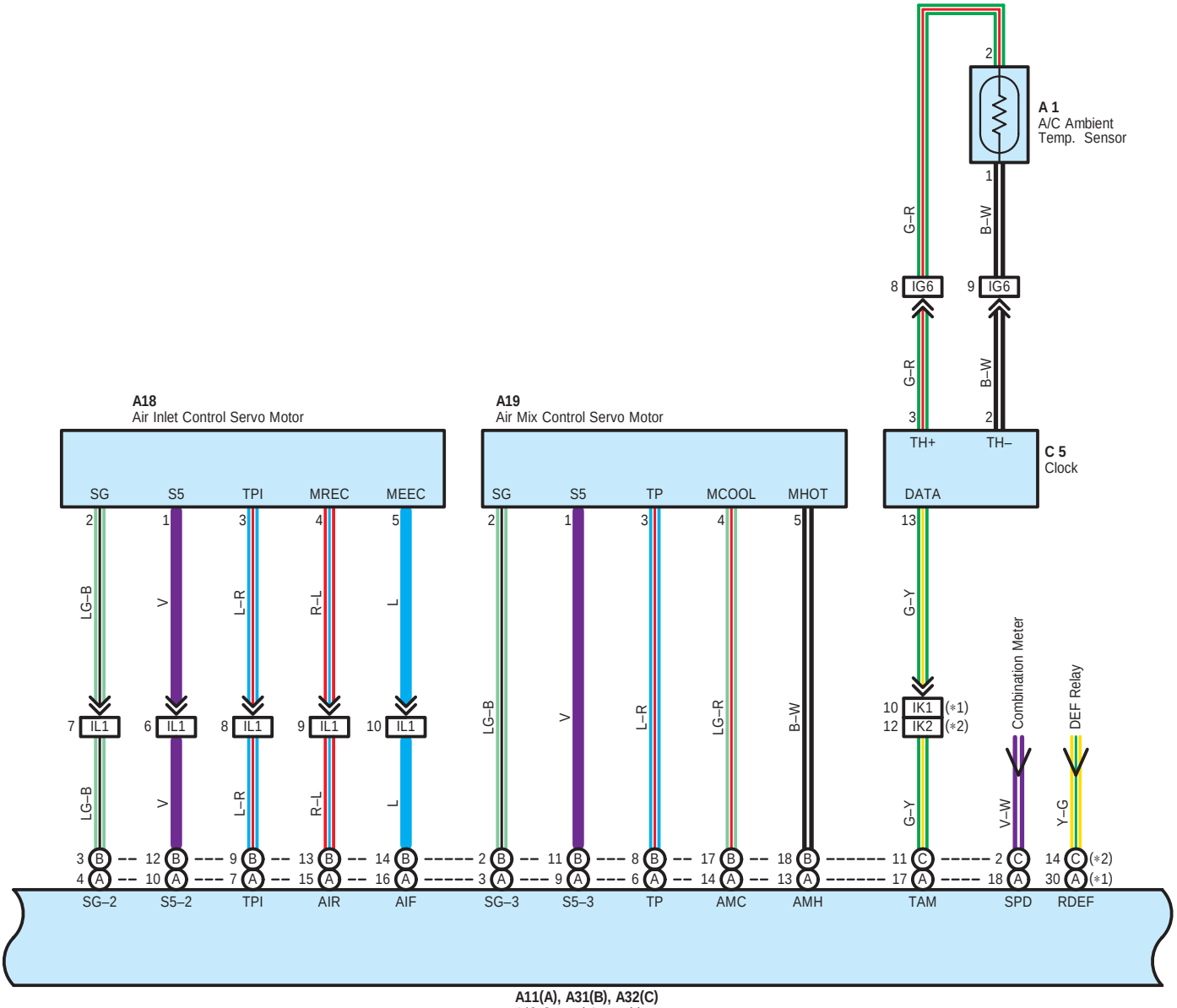

A11(A), A31(B), A32(C)
A/C Control Assembly

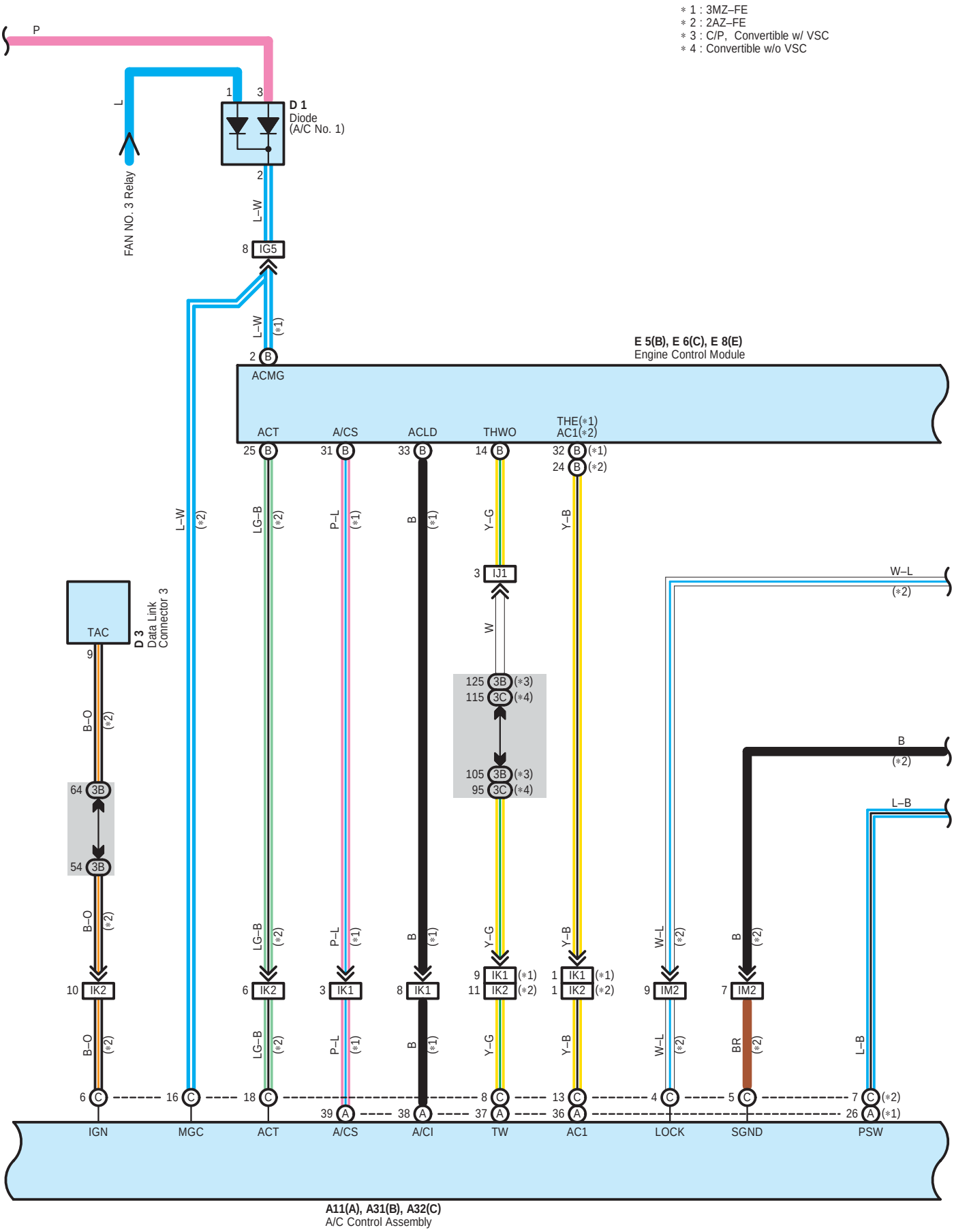
∗1 : 3MZ–FE
∗2 : 2AZ–FE
∗3 : C/P, Convertible w/ VSC
∗4 : Convertible w/o VSC
P
L
FAN NO. 3 Relay
D 1
Diode
(A/C No. 1)
L–W
IG5
E 5(B), E 6(C), E 8(E)
Engine Control Module
ACMG
ACT
A/CS
ACLD
THWO
THE(∗1)
AC1(∗2)
IJ1
W
W–L
B
L–B
TAC
D 3
Data Link
Connector 3
B–O
LG–B
P–L
Y–G
Y–B
IK2
IK1
IM2
BR
IGN
MGC
ACT
A/CS
A/CI
TW
AC1
LOCK
SGND
PSW
A11(A), A31(B), A32(C)
A/C Control Assembly

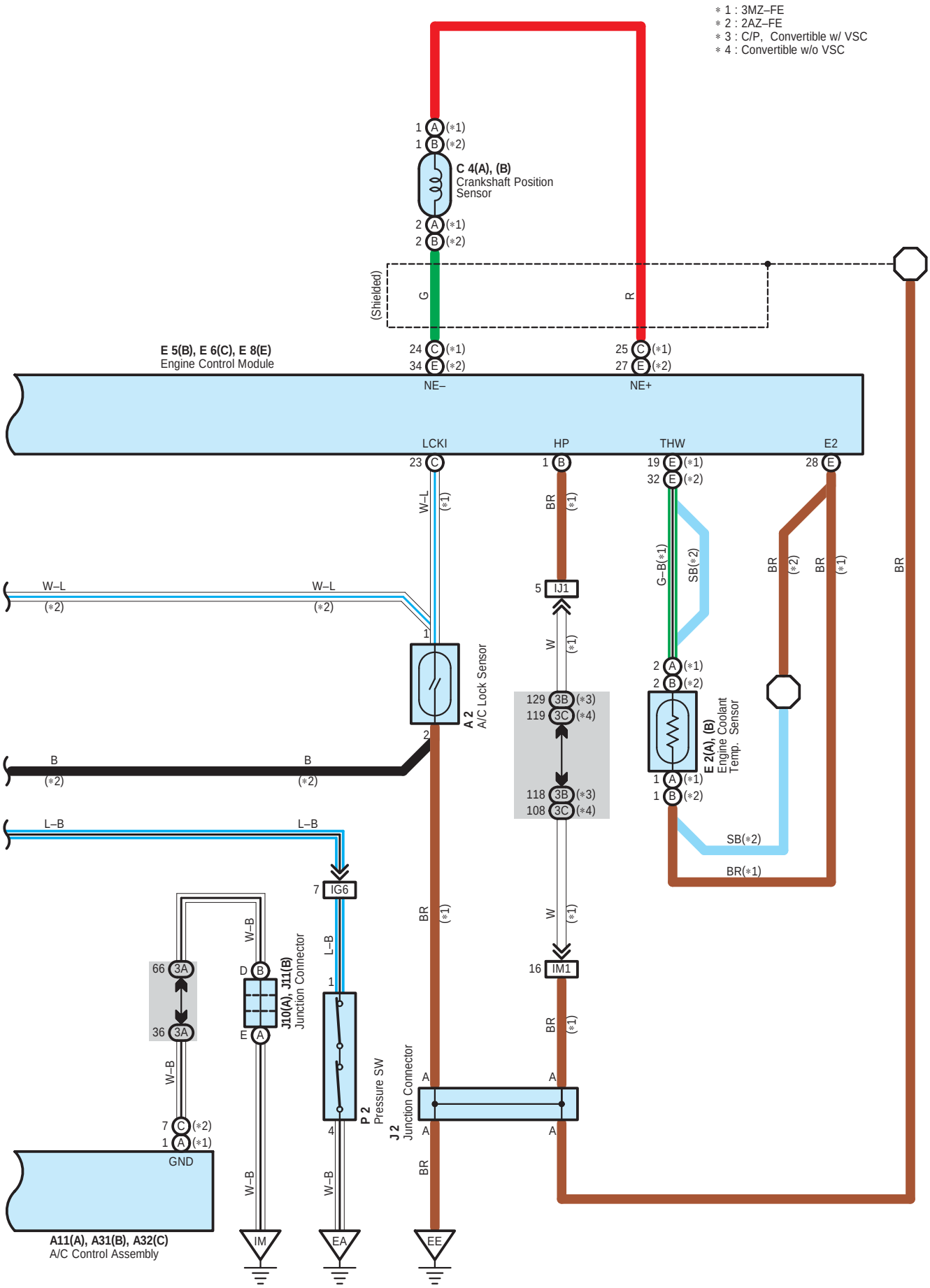
∗1 : 3MZ–FE
∗2 : 2AZ–FE
∗3 : C/P, Convertible w/ VSC
∗4 : Convertible w/o VSC
C 4(A), (B)
Crankshaft Position Sensor
(Shielded)
G
R
E 5(B), E 6(C), E 8(E)
Engine Control Module
NE–
NE+
LCKI
HP
THW
E2
A 2
A/C Lock Sensor
E 2(A), (B)
Engine Coolant Temp. Sensor
IJ1
IM1
IG6
J10(A), J11(B)
Junction Connector
P 2
Pressure SW
J 2
Junction Connector
A11(A), A31(B), A32(C)
A/C Control Assembly
GND
IM
EA
EE
W–L
B
L–B
W–B
BR
W
SB(∗2)
G–B(∗1)

System Outline

1. Heater Blower Operation

Manual operation

When the blower speed is set to a certain level using the blower control SW, the A/C control assembly sends the signals to the blower control to control the blower motor speed.

Auto operation

When the auto SW is turned on, the A/C control assembly sends the signals from various sensors and temperature SW to the blower control to automatically control the blower motor speed.

2. Air Inlet Control Servo Motor Control

When the FRESH/RECIRC select SW is set to RECIRC, the motor in the air inlet control servo motor starts rotating to move the damper toward the RECIRC side. Since the damper position is detected by the TERMINAL TPI of the A/C control assembly, the motor is continuously rotated until the damper reaches its stop position.When the FRESH/RECIRC select SW is set to FRESH, the motor in the air inlet control servo motor starts rotating to move the damper toward the FRESH side. Since the damper position is detected by the TERMINAL TPI of the A/C control assembly, the motor is continuously rotated until the damper reaches its stop position.

3. Air Vent Mode Control Servo Motor Control

When the mode select SW is pushed, the ECU in the A/C control assembly activates the air vent mode control servo motor. This causes the servo motor to rotate to the position (FACE, BI–LEVEL, FOOT, FOOT/DEF, DEF) selected using the mode select SW, and moves the film damper.

4. Air Mix Control Servo Motor Control

When the temperature control SW is pressed, the ECU in the A/C control assembly sends a signal to the air mix control servo motor. This signal drives the motor to reach the temperature set by the temperature control SW, and moves the film damper.

5. Air Conditioning Operation

The A/C control assembly receives various signals, I.E., the engine RPM from the engine control module, out side air temperature signal from the A/C ambient temp. sensor, coolant temperature from the engine control module and the lock signal from the A/C compressor, etc.

If the A/C control assembly detects the following conditions, it stops the air conditioning:

* Evaporator outlet air is too low.
* There is a marked difference between the compressor speed and the engine speed.
* The refrigerant pressure is abnormally high or abnormally low.
* The engine speed is too low.
* Rapid acceleration occurs.

: Parts Location

Code		See Page	Code		See Page	Code		See Page
A1		40 (3MZ–FE)	A20	A	44 (C/P)	E2		40 (3MZ–FE)
		42 (2AZ–FE)			46 (*1)			42 (2AZ–FE)
A2		40 (3MZ–FE)	A31	B	44 (C/P)	E5	B	44 (C/P)
		42 (2AZ–FE)	A32	C	44 (C/P)			46 (*1)
A11	A	44 (C/P)	B3		44 (C/P)	E6	C	44 (C/P)
		46 (*1)			46 (*1)			46 (*1)
A12		44 (C/P)	B4		44 (C/P)	E8	E	44 (C/P)
		46 (*1)			46 (*1)			46 (*1)
A13		44 (C/P)	C4	A	40 (3MZ–FE)	J2		45 (C/P)
		46 (*1)		B	42 (2AZ–FE)			47 (*1)
A14		44 (C/P)	C5		44 (C/P)	J10	A	45 (C/P)
		46 (*1)			46 (*1)			47 (*1)
A18		44 (C/P)	D1		40 (3MZ–FE)	J11	B	45 (C/P)
		46 (*1)			42 (2AZ–FE)			47 (*1)
A19		44 (C/P)	D3		44 (C/P)	P2		41 (3MZ–FE)
		46 (*1)			46 (*1)			43 (2AZ–FE)

: Relay Blocks

Code	See Page	Relay Blocks (Relay Block Location)
1	24	Engine Room R/B (Engine Compartment Left)

* 1 : Convertible * 2 : C/P, Convertible w/ VSC * 3 : Convertible w/o VSC

: Junction Block and Wire Harness Connector

Code	See Page	Junction Block and Wire Harness (Connector Location)
1F	27	Engine Room Main Wire and Engine Room J/B (Engine Compartment Left)
1J		
1L	27	Engine Wire and Engine Room J/B (Engine Compartment Left)
2D	30	Engine Room Main Wire and Driver Side J/B (Lower Finish Panel)
2F	30	Instrument Panel Wire and Driver Side J/B (Lower Finish Panel)
2G	31	
3A	36 (*2)	Instrument Panel Wire and Passenger Side J/B (Instrument Panel Brace RH)
	37 (*3)	
3B	36 (*2)	
3C	37 (*3)	

: Connector Joining Wire Harness and Wire Harness

Code	See Page	Joining Wire Harness and Wire Harness (Connector Location)
IG2	56 (C/P)	Engine Room Main Wire and Instrument Panel Wire (Behind the Radio and Player)
	58 (*1)	
IG3	56 (C/P)	
	58 (*1)	
IG5	56 (C/P)	
	58 (*1)	
IG6	56 (C/P)	
	58 (*1)	
II1	57 (C/P)	Instrument Panel Wire and Instrument Panel No.3 Wire (Behind the Glove Box)
	59 (*1)	
IJ1	57 (C/P)	Instrument Panel Wire and Instrument Panel Wire (Instrument Panel Reinforcement RH)
	59 (*1)	
IK1	57 (C/P)	
	59 (*1)	
IK2	57 (C/P)	
IL1	57 (C/P)	Instrument Panel Wire and Cowl No.2 Wire (Behind the Glove Box)
	59 (*1)	
IM1	57 (C/P)	Engine Wire and Instrument Panel Wire (Behind the Glove Box)
	59 (*1)	
IM2	57 (C/P)	

: Ground Points

Code	See Page	Ground Points Location
EA	54 (3MZ–FE)	Right Fender
	55 (2AZ–FE)	
EC	54 (3MZ–FE)	Left Fender
	55 (2AZ–FE)	
EE	54 (3MZ–FE)	Right Side of Cylinder Head
IM	56 (C/P)	Instrument Panel Reinforcement RH
	58 (*1)	
IN	56 (C/P)	
	58 (*1)	

* 1 : Convertible * 2 : C/P, Convertible w/ VSC * 3 : Convertible w/o VSC

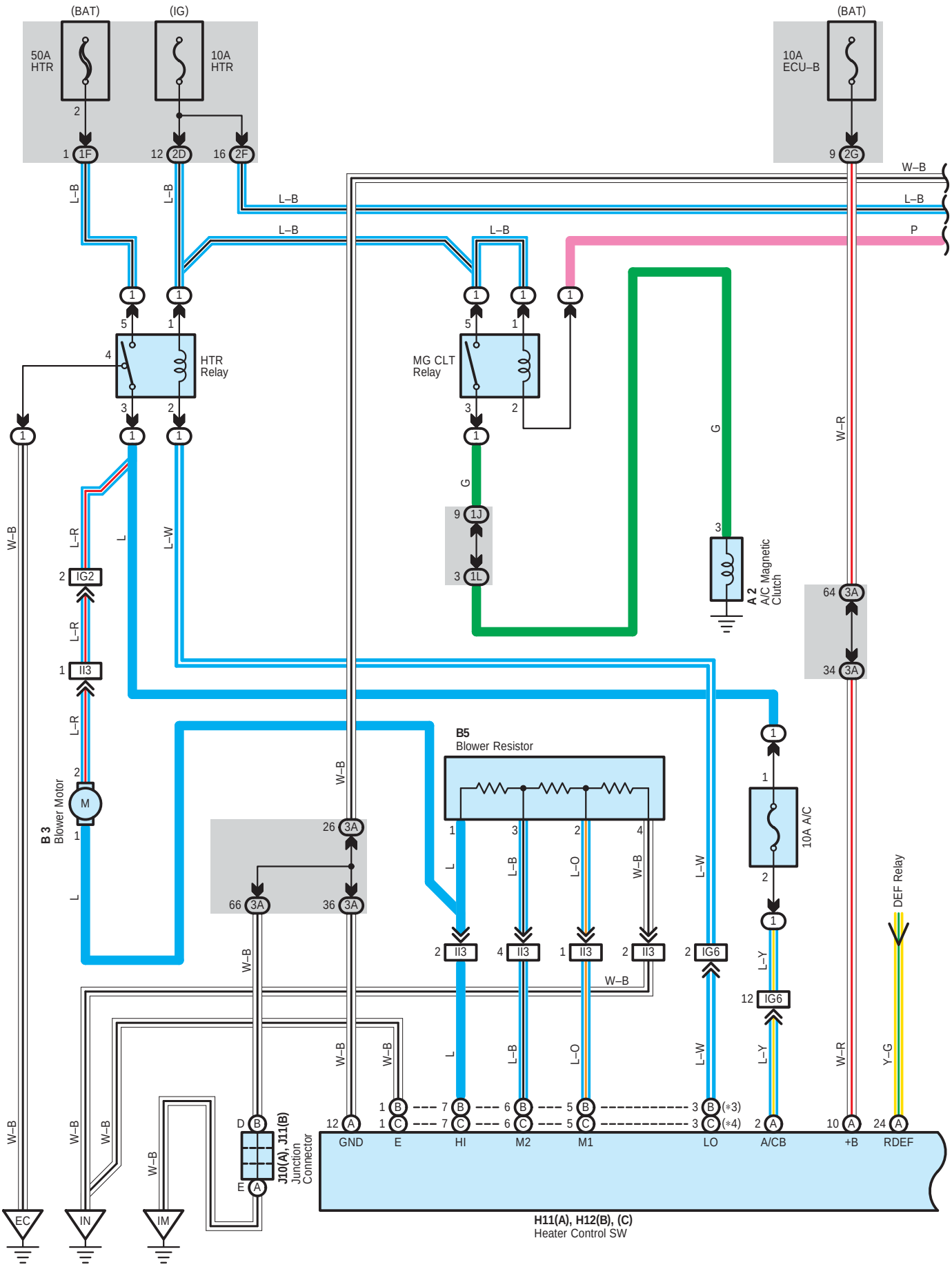
(BAT)
(IG)
50A HTR
10A HTR
10A ECU–B
HTR Relay
MG CLT Relay
A 2 A/C Magnetic Clutch
B 3 Blower Motor
B5 Blower Resistor
10A A/C
DEF Relay
J10(A), J11(B) Junction Connector
H11(A), H12(B), (C) Heater Control SW
GND
E
HI
M2
M1
LO
A/CB
+B
RDEF
EC
IN
IM

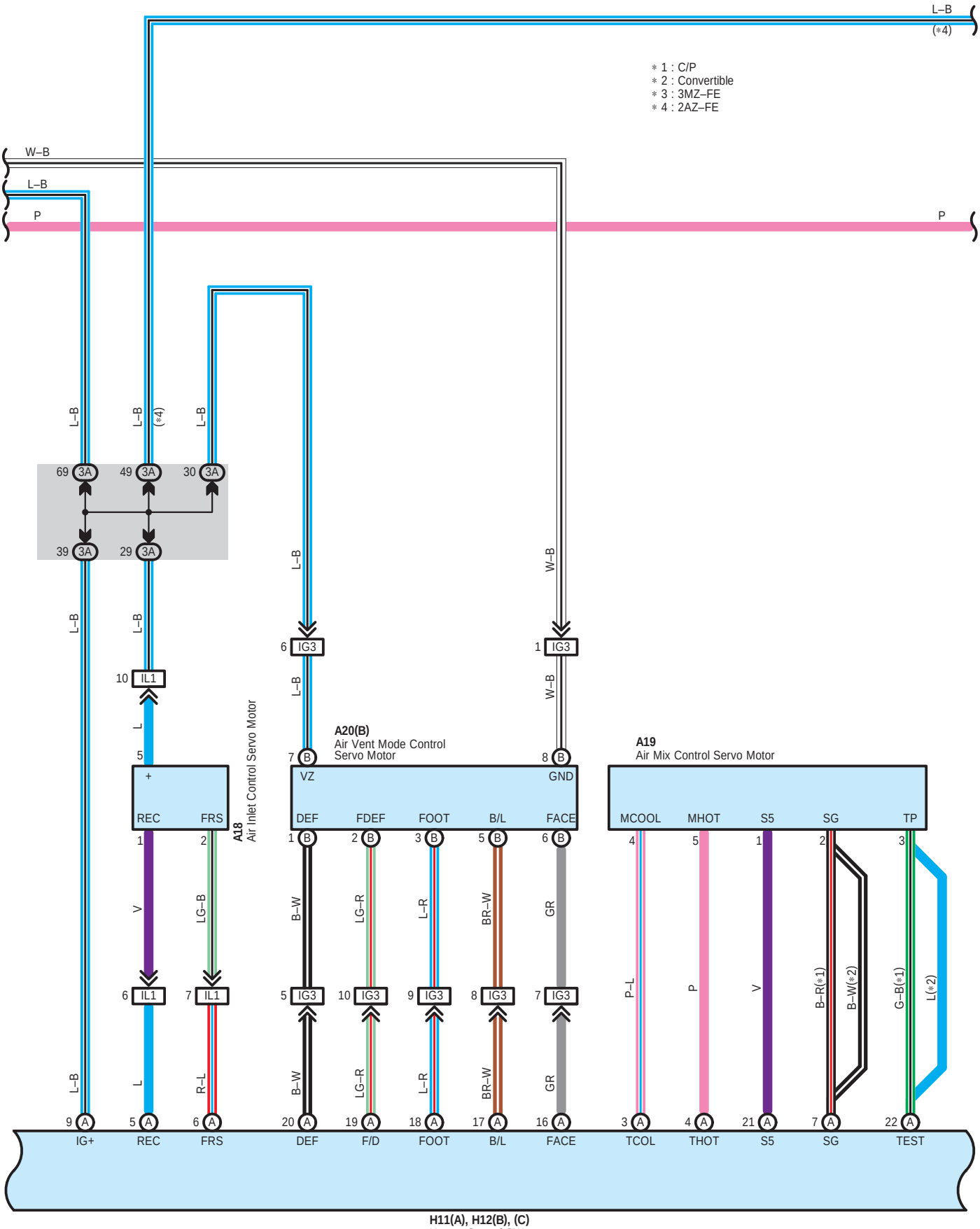
L–B
(*4)
* 1 : C/P
* 2 : Convertible
* 3 : 3MZ–FE
* 4 : 2AZ–FE
W–B
L–B
P
P
L–B
L–B
(*4)
L–B
69 3A
49 3A
30 3A
39 3A
29 3A
L–B
L–B
L–B
W–B
6 IG3
1 IG3
10 IL1
L–B
W–B
L
5
A18
Air Inlet Control Servo Motor
A20(B)
Air Vent Mode Control
Servo Motor
7 B
8 B
A19
Air Mix Control Servo Motor
+
VZ
GND
REC
FRS
DEF
FDEF
FOOT
B/L
FACE
MCOOL
MHOT
S5
SG
TP
1
2
1 B
2 B
3 B
5 B
6 B
4
5
1
2
3
V
LG–B
B–W
LG–R
L–R
BR–W
GR
P–L
P
V
B–R(*1)
B–W(*2)
G–B(*1)
L(*2)
6 IL1
7 IL1
5 IG3
10 IG3
9 IG3
8 IG3
7 IG3
L–B
L
R–L
B–W
LG–R
L–R
BR–W
GR
9 A
5 A
6 A
20 A
19 A
18 A
17 A
16 A
3 A
4 A
21 A
7 A
22 A
IG+
REC
FRS
DEF
F/D
FOOT
B/L
FACE
TCOL
THOT
S5
SG
TEST
H11(A), H12(B), (C)
Heater Control SW

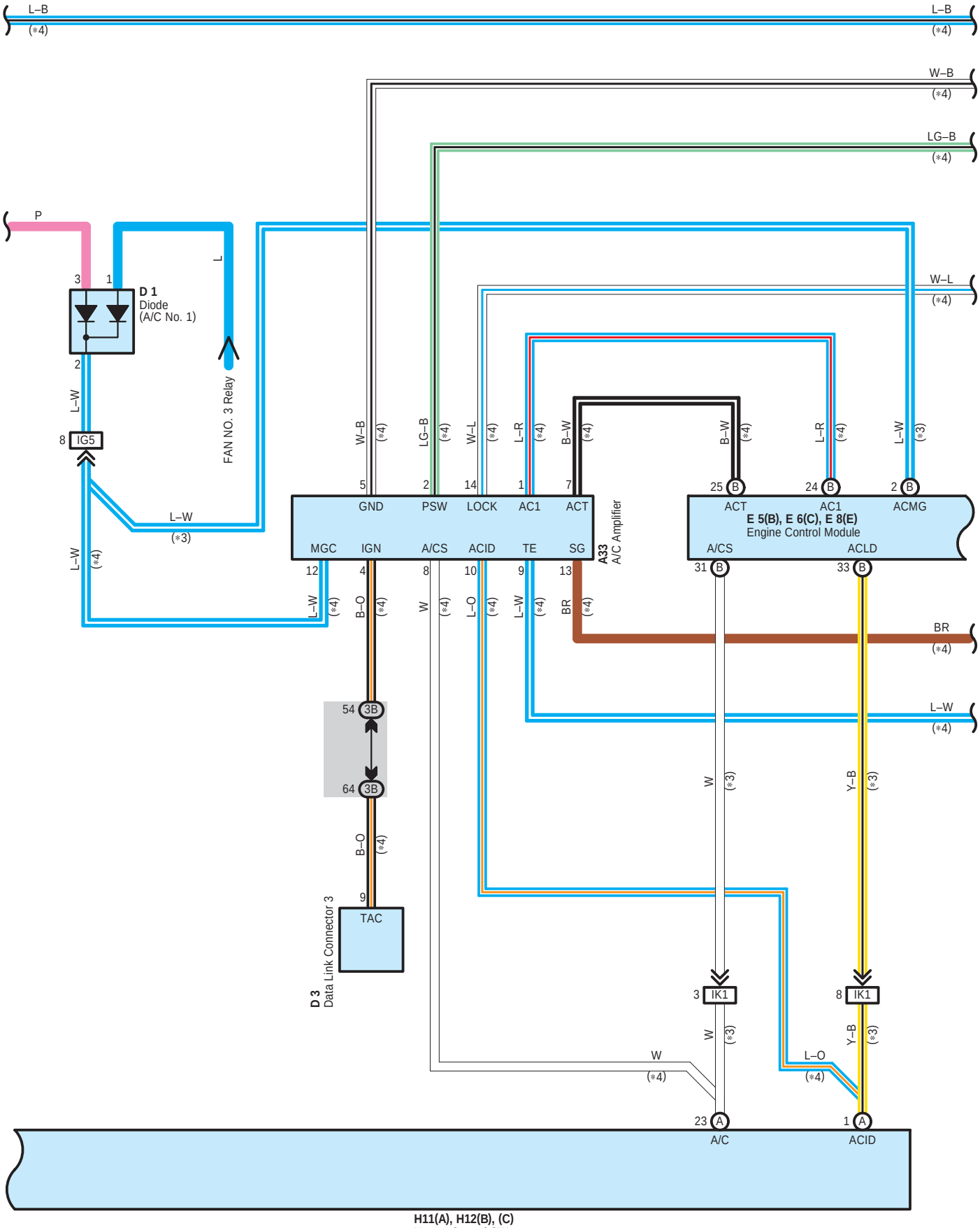

H11(A), H12(B), (C)
Heater Control SW

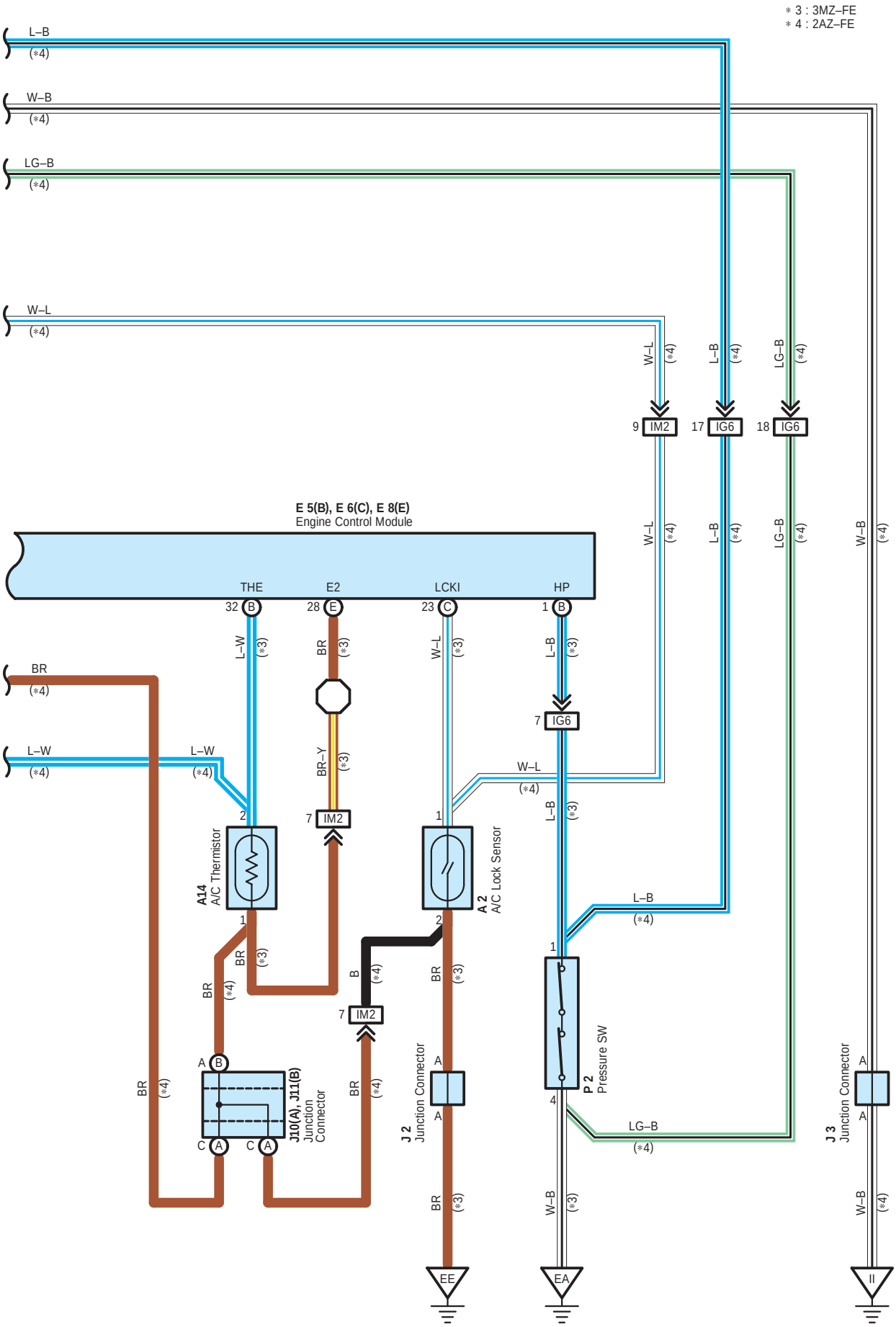
* 3 : 3MZ–FE
* 4 : 2AZ–FE
L–B
(*4)
W–B
(*4)
LG–B
(*4)
W–L
(*4)
9 IM2
17 IG6
18 IG6
E 5(B), E 6(C), E 8(E)
Engine Control Module
THE
E2
LCKI
HP
32 B
28 E
23 C
1 B
L–W
(*3)
BR
(*3)
W–L
(*3)
L–B
(*3)
7 IG6
BR–Y
(*3)
7 IM2
A14
A/C Thermistor
A 2
A/C Lock Sensor
P 2
Pressure SW
J 2
Junction Connector
J 3
Junction Connector
J10(A), J11(B)
Junction Connector
EE
EA
II

System Outline

1. Heater Blower Motor Operation

∗ Low speed operation
When the heater control SW is moved to LO position, current flows to TERMINAL LO of the heater control SW to GROUND, activating the HTR relay. This causes the current to flow from the HTR (50A) fuse to TERMINAL 5 of the HTR relay to TERMINAL 3 to TERMINAL 2 of the blower motor to TERMINAL 1 to TERMINAL 1 of the blower resistor to TERMINAL 4 to GROUND, causing the blower motor to rotate at low speed.

∗ Medium speed operation (Operation at M1, M2)
When the blower SW is moved to M1 position, current flows to TERMINAL LO of the heater control SW to GROUND, turning the HTR relay to switch on. This causes the current to flow from the HTR (50A) fuse to TERMINAL 5 of the HTR relay to TERMINAL 3 to TERMINAL 2 of the blower motor to TERMINAL 1 to TERMINAL 1 of the blower resistor to TERMINAL 2 to TERMINAL (B) 5 (3MZ–FE) or (C) 5 (2AZ–FE) of the heater control SW to GROUND. At this time, the blower resistance of the blower resistor is less than at low speed, so the blower motor rotates at medium low speed.
When the blower SW is moved to M2 position, current flows through the motor flows from TERMINAL 1 of the blower resistor to TERMINAL 3 to TERMINAL (B) 6 (3MZ–FE) or (C) 6 (2AZ–FE) of the heater control SW to GROUND. At this time, resistance of the blower resistor is less than at M1 position, so the blower motor rotates at medium high speed.

∗ High speed operation
When the blower SW is moved to HIGH position, current flows to TERMINAL LO of the heater control SW to GROUND, turning the HTR relay to switch on.
This causes the current to flow from the HTR (50A) fuse to TERMINAL 5 of the HTR relay to TERMINAL 3 to TERMINAL 2 of the blower motor to TERMINAL 1 to TERMINAL (B) 7 (3MZ–FE) or (C) 7 (2AZ–FE) of the heater control SW to GROUND, causing the blower motor to rotate at high speed.

: Parts Location

Code	See Page	Code	See Page	Code	See Page
A2	40 (3MZ–FE)	B5	44 (C/P)	H12 B	44 (C/P)
	42 (2AZ–FE)		46 (*1)		46 (*1)
A14	44 (C/P)	D1	40 (3MZ–FE)	H12 C	44 (C/P)
	46 (*1)		42 (2AZ–FE)	J2	45 (C/P)
A18	44 (C/P)	D3	44 (C/P)		47 (*1)
	46 (*1)	E5 B	44 (C/P)	J3	45 (C/P)
A19	44 (C/P)		46 (*1)		47 (*1)
	46 (*1)	E6 C	44 (C/P)	J10 A	45 (C/P)
A20 B	44 (C/P)		46 (*1)		47 (*1)
	46 (*1)	E8 E	44 (C/P)	J11 B	45 (C/P)
A33	44 (C/P)		46 (*1)		47 (*1)
B3	44 (C/P)	H11 A	44 (C/P)	P2	41 (3MZ–FE)
	46 (*1)		46 (*1)		43 (2AZ–FE)

: Relay Blocks

Code	See Page	Relay Blocks (Relay Block Location)
1	24	Engine Room R/B (Engine Compartment Left)

* 1 : Convertible * 2 : C/P, Convertible w/ VSC * 3 : Convertible w/o VSC

: **Junction Block and Wire Harness Connector**

Code	See Page	Junction Block and Wire Harness (Connector Location)
1F	27	Engine Room Main Wire and Engine Room J/B (Engine Compartment Left)
1J		
1L	27	Engine Wire and Engine Room J/B (Engine Compartment Left)
2D	30	Engine Room Main Wire and Driver Side J/B (Lower Finish Panel)
2F	30	Instrument Panel Wire and Driver Side J/B (Lower Finish Panel)
2G	31	
3A	36 (*2)	Instrument Panel Wire and Passenger Side J/B (Instrument Panel Brace RH)
	37 (*3)	
3B	36 (*2)	

: **Connector Joining Wire Harness and Wire Harness**

Code	See Page	Joining Wire Harness and Wire Harness (Connector Location)
IG2	56 (C/P)	Engine Room Main Wire and Instrument Panel Wire (Behind the Radio and Player)
	58 (*1)	
IG3	56 (C/P)	
	58 (*1)	
IG5	56 (C/P)	
	58 (*1)	
IG6	56 (C/P)	
	58 (*1)	
II3	57 (C/P)	Instrument Panel Wire and Instrument Panel No.3 Wire (Behind the Glove Box)
	59 (*1)	
IK1	57 (C/P)	Instrument Panel Wire and Instrument Panel Wire (Instrument Panel Reinforcement RH)
	59 (*1)	
IL1	57 (C/P)	Instrument Panel Wire and Cowl No.2 Wire (Behind the Glove Box)
	59 (*1)	
IM2	57 (C/P)	Engine Wire and Instrument Panel Wire (Behind the Glove Box)
	59 (*1)	

: **Ground Points**

Code	See Page	Ground Points Location
EA	54 (3MZ–FE)	Right Fender
EC	54 (3MZ–FE)	Left Fender
	55 (2AZ–FE)	
EE	54 (3MZ–FE)	Right Side of Cylinder Head
II	56 (C/P)	Cowl Side Panel LH
IM	56 (C/P)	Instrument Panel Reinforcement RH
	58 (*1)	
IN	56 (C/P)	
	58 (*1)	

* 1 : Convertible * 2 : C/P, Convertible w/ VSC * 3 : Convertible w/o VSC

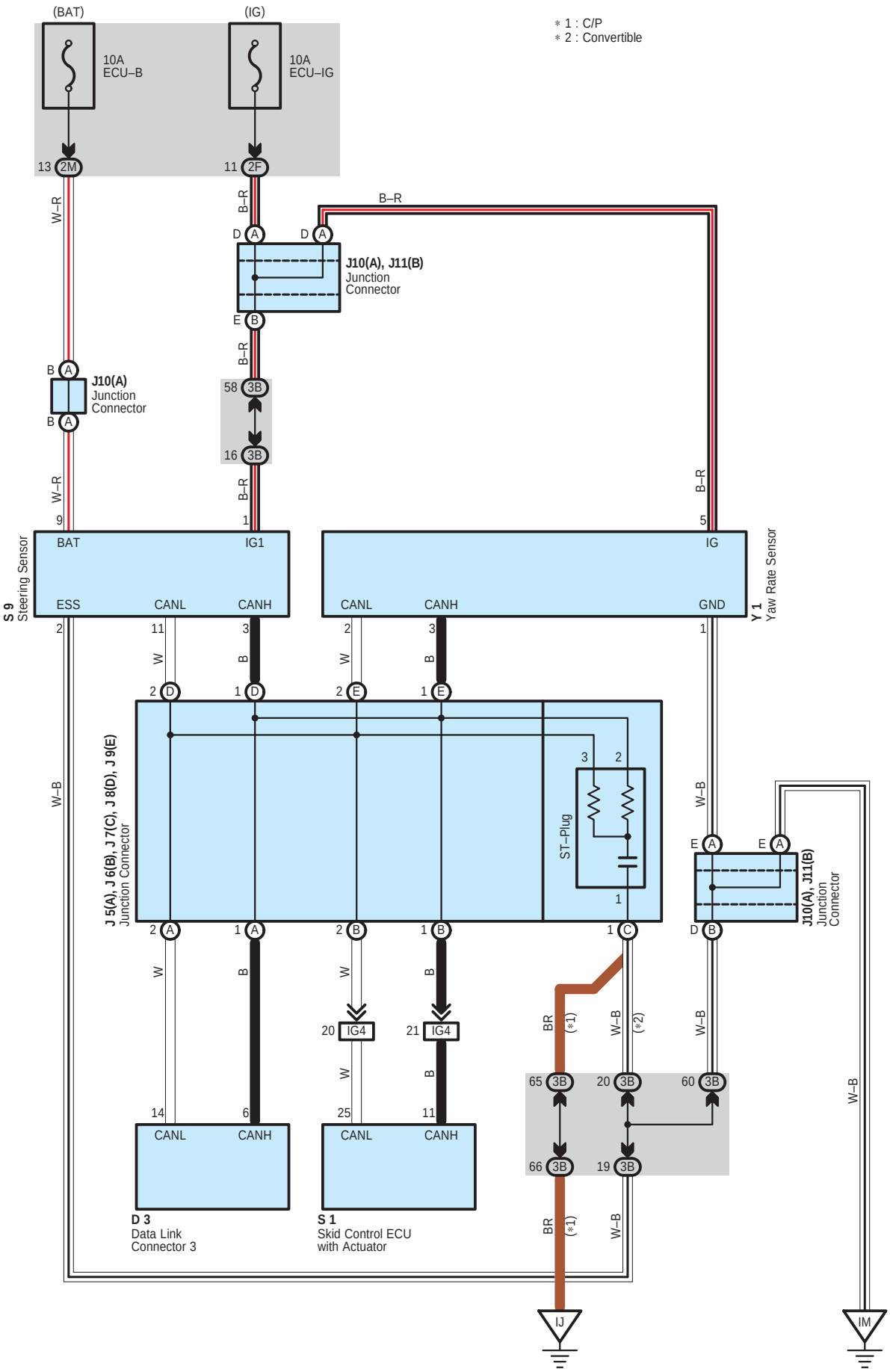
(BAT)
(IG)
10A
ECU–B
10A
ECU–IG
* 1 : C/P
* 2 : Convertible
13 2M
11 2F
W–R
B–R
J10(A), J11(B)
Junction
Connector
J10(A)
Junction
Connector
58 3B
16 3B
S 9
Steering Sensor
BAT
IG1
ESS
CANL
CANH
IG
GND
Y 1
Yaw Rate Sensor
W
B
W–B
J 5(A), J 6(B), J 7(C), J 8(D), J 9(E)
Junction Connector
ST–Plug
IG4
BR
(*1)
(*2)
65 3B
20 3B
60 3B
66 3B
19 3B
D 3
Data Link
Connector 3
S 1
Skid Control ECU
with Actuator
IJ
IM

System Outline

Multiplex communication system (CAN) uses a serial communication protocol and communicates with a differential voltage. In this network system, TERMINALS CANH and CANL are used for communication between the ECUs and sensors, and excellent data communication speed and communication error detecting facility are provided. This system is working for the following system:

* VSC

: Parts Location

Code		See Page	Code		See Page	Code		See Page
D3		44 (C/P)	J7	C	38, 45 (C/P)	J11	B	45 (C/P)
		46 (*1)	J8	D	38, 47 (*1)			47 (*1)
J5	A	38, 47 (*1)			38, 45 (C/P)	S1		41 (3MZ–FE)
		38, 45 (C/P)	J9	E	38, 47 (*1)	S9		45 (C/P)
J6	B	38, 47 (*1)			38, 45 (C/P)			47 (*1)
		38, 45 (C/P)	J10	A	45 (C/P)	Y1		45 (C/P)
J7	C	38, 47 (*1)			47 (*1)			47 (*1)

: Junction Block and Wire Harness Connector

Code	See Page	Junction Block and Wire Harness (Connector Location)
2F	30	Instrument Panel Wire and Driver Side J/B (Lower Finish Panel)
2M		
3B	36 (*2)	Instrument Panel Wire and Passenger Side J/B (Instrument Panel Brace RH)

: Connector Joining Wire Harness and Wire Harness

Code	See Page	Joining Wire Harness and Wire Harness (Connector Location)
IG4	56 (C/P)	Engine Room Main Wire and Instrument Panel Wire (Behind the Radio and Player)
	58 (*1)	

: Ground Points

Code	See Page	Ground Points Location
IJ	56 (C/P)	Instrument Panel Brace LH
IM	56 (C/P)	Instrument Panel Reinforcement RH
	58 (*1)	

* 1 : Convertible * 2 : C/P, Convertible w/ VSC * 3 : Convertible w/o VSC

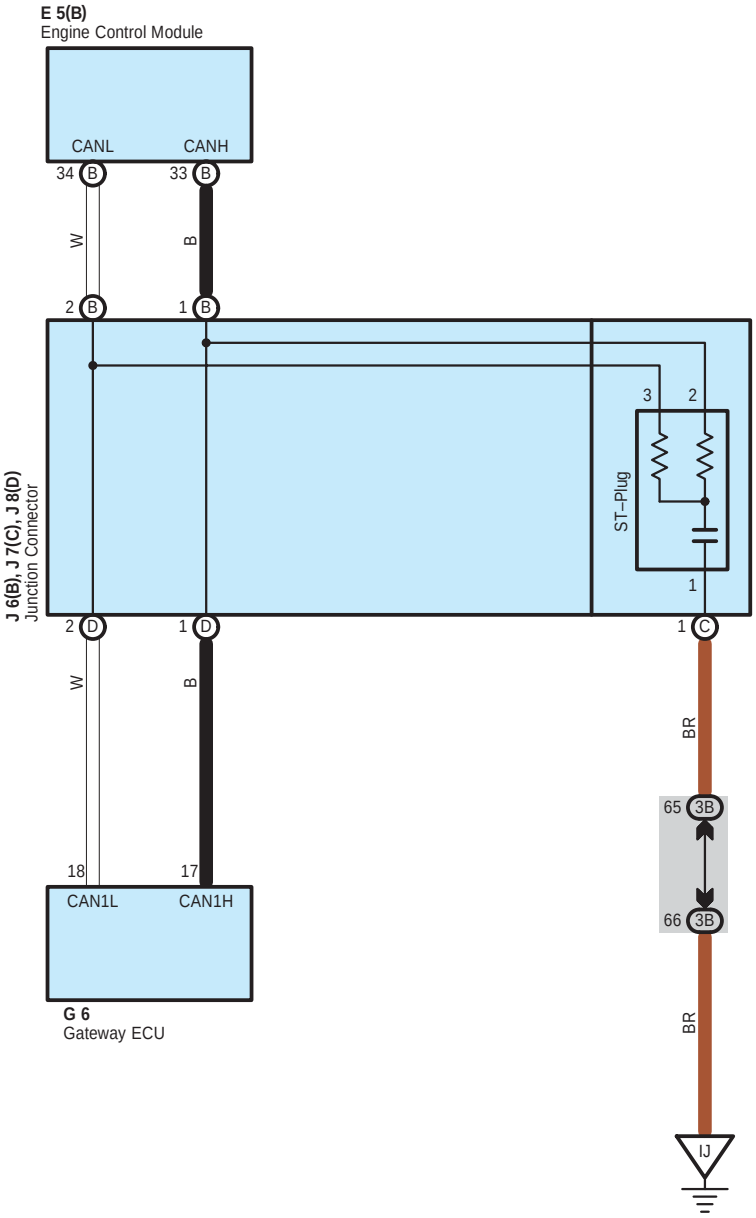
E 5(B)
Engine Control Module
CANL
CANH
34 B
33 B
W
B
2 B
1 B
J 6(B), J 7(C), J 8(D)
Junction Connector
3
2
ST–Plug
1
2 D
1 D
1 C
W
B
BR
65 3B
66 3B
18
17
CAN1L
CAN1H
G 6
Gateway ECU
BR
IJ

System Outline

Multiplex communication system (CAN) uses a serial communication protocol and communicates with a differential voltage. In this network system, TERMINALS CANH and CANL are used for communication between the ECUs and sensors, and excellent data communication speed and communication error detecting facility are provided. This system is working for the following systems:

* Engine Control
* Electronically Controlled Transmission and A/T Indicator

: Parts Location

Code		See Page	Code		See Page	Code		See Page
E5	B	44 (C/P)	J6	B	38, 45 (C/P)	J8	D	38, 45 (C/P)
G6		44 (C/P)	J7	C	38, 45 (C/P)			

: Junction Block and Wire Harness Connector

Code	See Page	Junction Block and Wire Harness (Connector Location)
3B	36 (*2)	Instrument Panel Wire and Passenger Side J/B (Instrument Panel Brace RH)

: Ground Points

Code	See Page	Ground Points Location
IJ	56 (C/P)	Instrument Panel Brace LH

* 1 : Convertible * 2 : C/P, Convertible w/ VSC * 3 : Convertible w/o VSC

＊1 : C/P
＊2 : Convertible

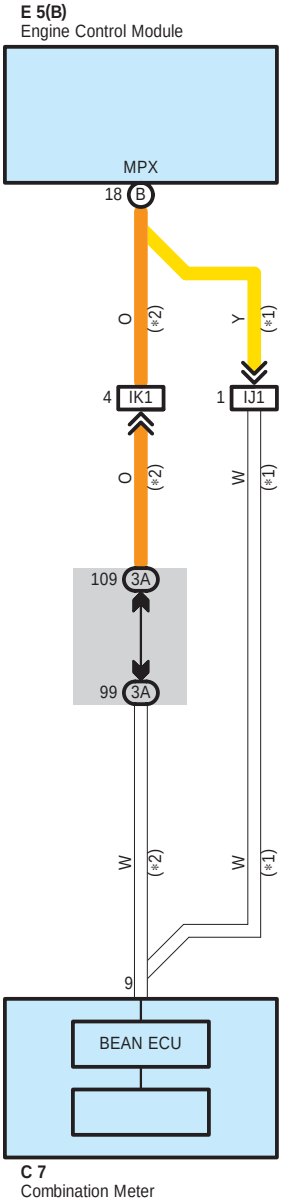

System Outline

The multiplex communication system communicates among the engine control module and combination meter and controls the following systems according to the signals from respective sensors or switches.

Multiplex Communication System Includes Following Systems

- **Engine Control**
- **Electronically Controlled Transmission and A/T Indicator**
- **Combination Meter**

: Parts Location

Code	See Page	Code		See Page	Code	See Page
C7	44 (C/P)	E5	B	44 (C/P)		
	46 (*1)			46 (*1)		

: Junction Block and Wire Harness Connector

Code	See Page	Junction Block and Wire Harness (Connector Location)
3A	36 (*2)	Instrument Panel Wire and Passenger Side J/B (Instrument Panel Brace RH)
	37 (*3)	

: Connector Joining Wire Harness and Wire Harness

Code	See Page	Joining Wire Harness and Wire Harness (Connector Location)
IJ1	57 (C/P)	Instrument Panel Wire and Instrument Panel Wire (Instrument Panel Reinforcement RH)
IK1	59 (*1)	

* 1 : Convertible * 2 : C/P, Convertible w/ VSC * 3 : Convertible w/o VSC

2006 CAMRY SOLARA ELECTRICAL WIRING DIAGRAM SYSTEM CIRCUITS

	Page
ABS	178
Air Conditioning (Automatic A/C)	278
Air Conditioning (Manual A/C)	286
Audio System (Built–In Type Amplifier w/o Navigation System)	264
Audio System (Separate Type Amplifier w/o Navigation System)	260
Audio System (Separate Type Amplifier w/ Navigation System)	252
Automatic Glare–Resistant EC Mirror with Compass	234
Automatic Light Control	118
Back–Up Light	140
Charging	76
Clock	246
Combination Meter	266
Convertible Roof	164
Cruise Control (2AZ–FE)	198
Cruise Control (3MZ–FE)	192
Door Lock Control	144
Electronically Controlled Transmission and A/T Indicator (2AZ–FE)	212
Electronically Controlled Transmission and A/T Indicator (3MZ–FE)	204
Engine Control (2AZ–FE)	90
Engine Control (3MZ–FE)	78
Engine Immobiliser System	102
Fog Light	116
Garage Door Opener	236
Headlight	112
Horn	240
Ignition (2AZ–FE)	72
Ignition (3MZ–FE)	68
Illumination	126
Interior Light	122
Key Reminder	142
Light Auto Turn Off System	120
Mirror Heater	244
Moon Roof	158
Multiplex Communication System (BEAN 2AZ–FE)	110
Multiplex Communication System (BEAN 3MZ–FE)	108
Multiplex Communication System (CAN 2AZ–FE)	106
Multiplex Communication System (CAN 3MZ–FE)	104
Navigation System	252
Power Outlet	238
Power Seat	222
Power Source	64
Power Window (Convertible)	164
Power Window (Coupe)	160
Radiator Fan and Condenser Fan	272
Rear Window Defogger	244
Remote Control Mirror	232
Seat Belt Warning	228

	Page
Seat Heater	226
Shift Lock	220
SRS	185
Starting (2AZ–FE)	72
Starting (3MZ–FE)	68
Stop Light	138
Taillight	136
Theft Deterrent	144
Tire Pressure Warning System (ABS)	178
Tire Pressure Warning System (VSC)	170
Turn Signal and Hazard Warning Light	132
VSC	170
Wiper and Washer	242
Wireless Door Lock Control	150

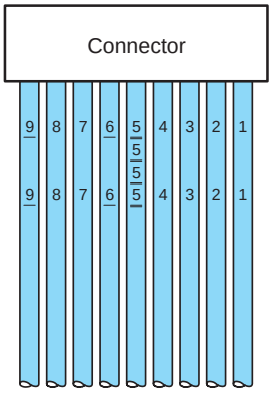

There are two types of wire harness for the instrument panel on CAMRY SOLARA.

Type A : The wire harness that uses the color–coded wire.
Type B : The wire harness that uses the same colored wire. (Not color–coded)

In case of using the same colored wires, each terminal number is printed on the wire as shown in the illustration on the left in order to distinguish each wiring.
Be sure to connect the terminal to the same place as indicated by the terminal number printed on the wire after disconnecting the terminal from the connector.

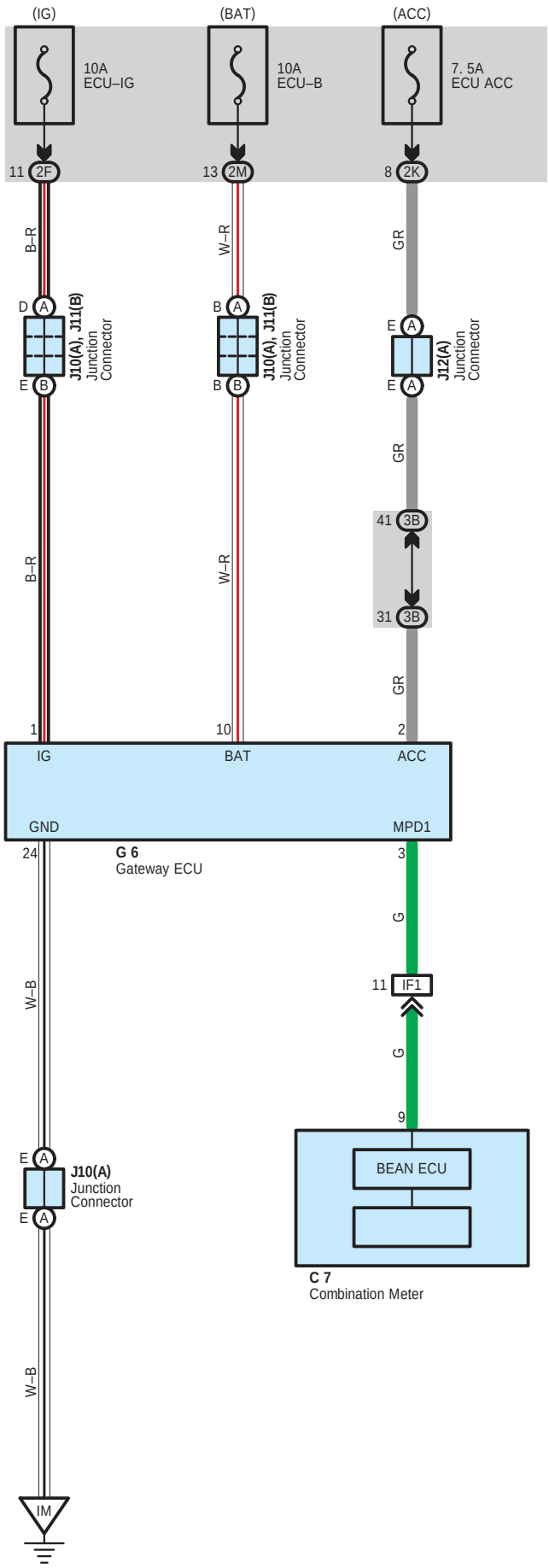
(IG)
(BAT)
(ACC)
10A
ECU–IG
10A
ECU–B
7. 5A
ECU ACC
11 2F
13 2M
8 2K
B–R
W–R
GR
D A
E B
B A
B B
E A
E A
J10(A), J11(B)
Junction
Connector
J12(A)
Junction
Connector
41 3B
31 3B
1
10
2
IG
BAT
ACC
GND
MPD1
24
3
G 6
Gateway ECU
W–B
G
11 IF1
9
BEAN ECU
J10(A)
Junction
Connector
C 7
Combination Meter
IM

System Outline

The multiplex communication system communicates among the engine control module and combination meter and controls the following systems according to the signals from respective sensors or switches.

Multiplex Communication System Includes Following Systems

- **Engine Control**
- **Electronically Controlled Transmission and A/T Indicator**
- **Combination Meter**

: Parts Location

Code	See Page	Code		See Page	Code		See Page
C7	44 (C/P)	J10	A	45 (C/P)	J12	A	45 (C/P)
G6	44 (C/P)	J11	B	45 (C/P)			

: Junction Block and Wire Harness Connector

Code	See Page	Junction Block and Wire Harness (Connector Location)
2F	30	Instrument Panel Wire and Driver Side J/B (Lower Finish Panel)
2K		
2M		
3B	36 (*2)	Instrument Panel Wire and Passenger Side J/B (Instrument Panel Brace RH)

: Connector Joining Wire Harness and Wire Harness

Code	See Page	Joining Wire Harness and Wire Harness (Connector Location)
IF1	56 (C/P)	Instrument Panel Wire and Instrument Panel Wire (Instrument Panel Brace LH)

: Ground Points

Code	See Page	Ground Points Location
IM	56 (C/P)	Instrument Panel Reinforcement RH

* 1 : Convertible * 2 : C/P, Convertible w/ VSC * 3 : Convertible w/o VSC

I GROUND POINT

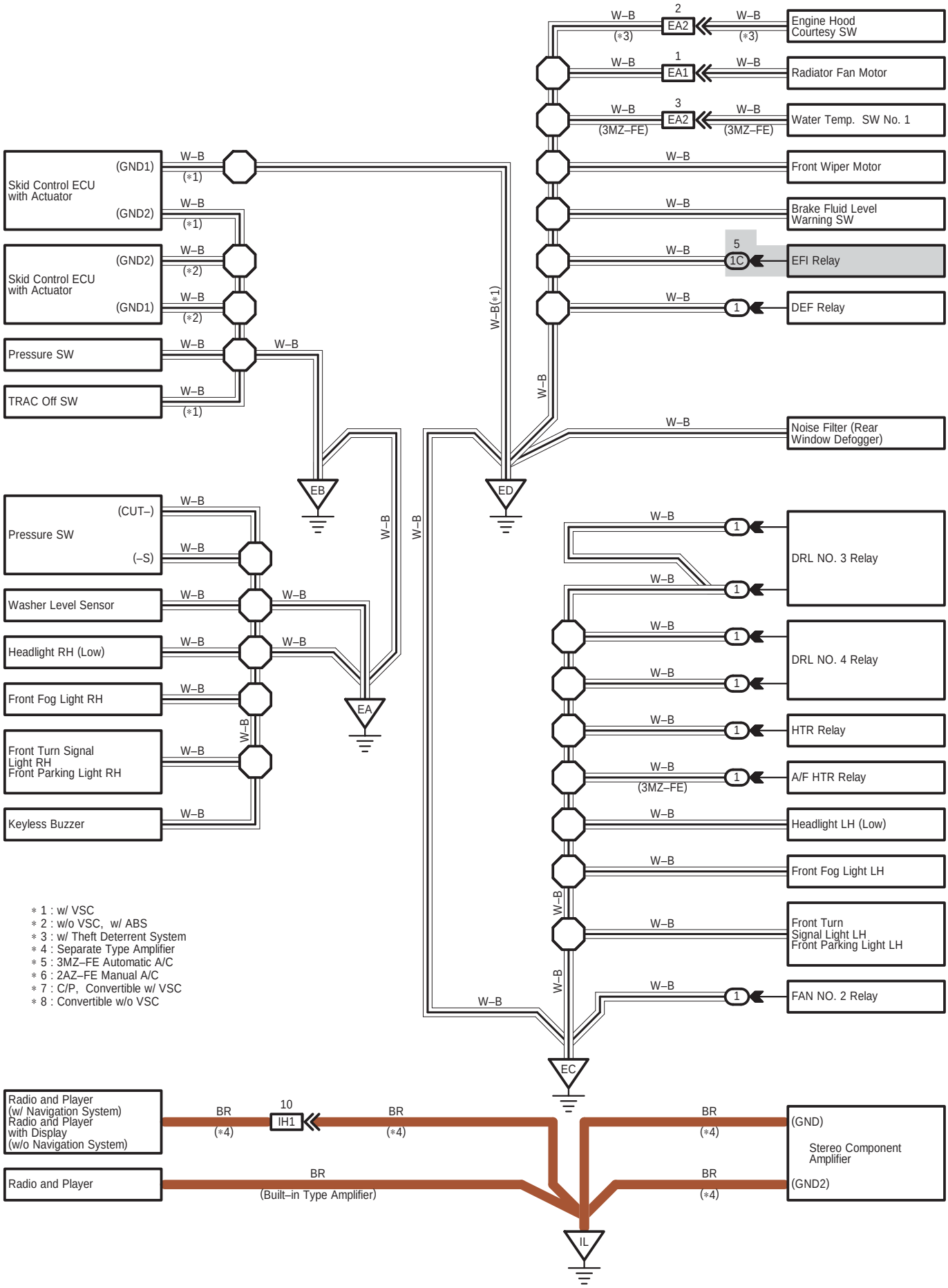

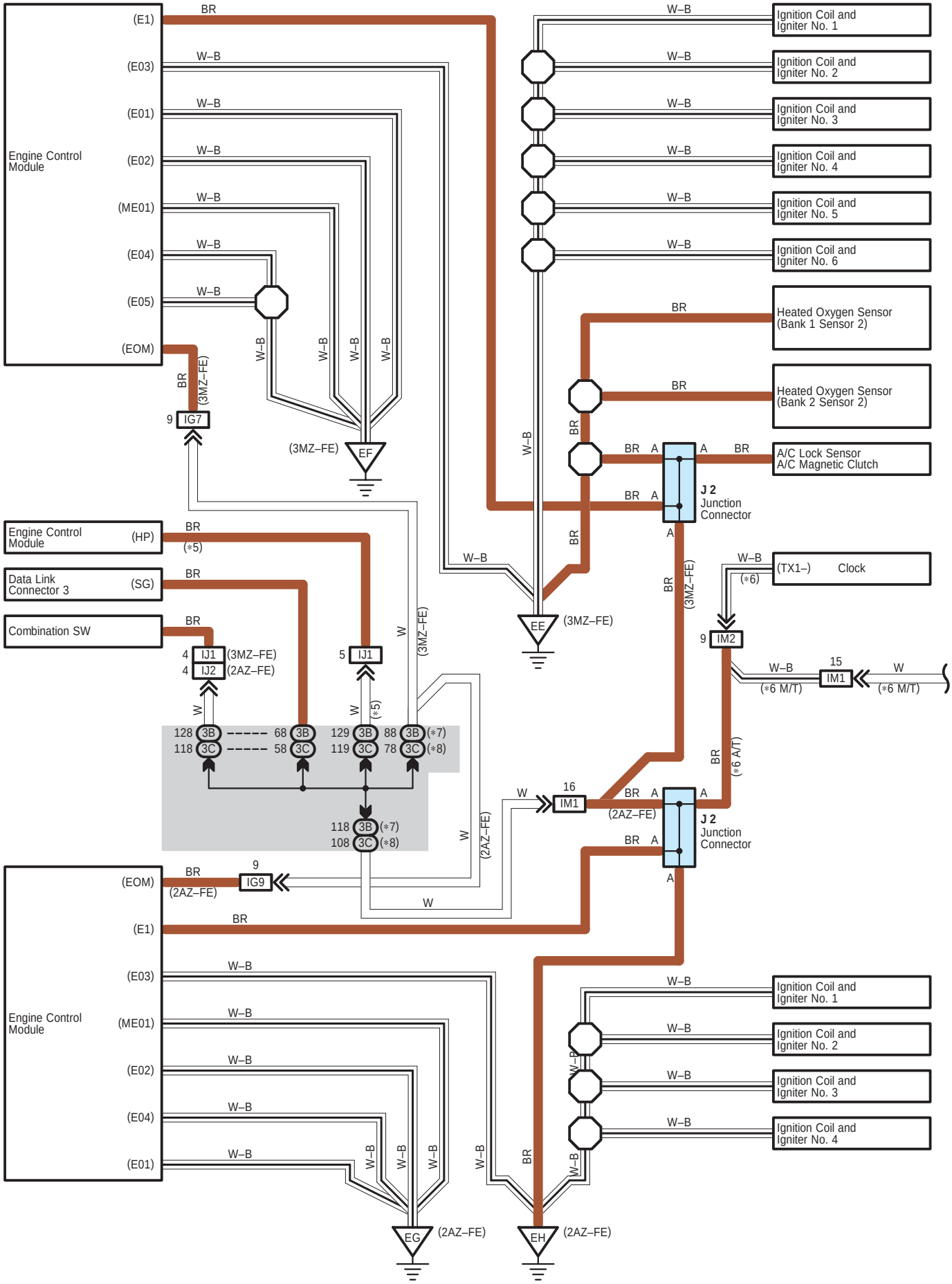
Engine Control Module
(E1)
(E03)
(E01)
(E02)
(ME01)
(E04)
(E05)
(EOM)
BR
W–B
(3MZ–FE)
9 IG7
(3MZ–FE) EF
Ignition Coil and Igniter No. 1
Ignition Coil and Igniter No. 2
Ignition Coil and Igniter No. 3
Ignition Coil and Igniter No. 4
Ignition Coil and Igniter No. 5
Ignition Coil and Igniter No. 6
Heated Oxygen Sensor (Bank 1 Sensor 2)
Heated Oxygen Sensor (Bank 2 Sensor 2)
A/C Lock Sensor A/C Magnetic Clutch
J 2 Junction Connector
Engine Control Module (HP)
(*5)
Data Link Connector 3 (SG)
Combination SW
4 IJ1 (3MZ–FE)
4 IJ2 (2AZ–FE)
5 IJ1
EE (3MZ–FE)
(TX1–) Clock
(*6)
9 IM2
15 IM1
(*6 M/T)
W
128 3B
118 3C
68 3B
58 3C
129 3B
119 3C
88 3B (*7)
78 3C (*8)
118 3B (*7)
108 3C (*8)
16 IM1
(2AZ–FE)
(*6 A/T)
9 IG9
(2AZ–FE)
EG (2AZ–FE)
EH (2AZ–FE)

I GROUND POINT

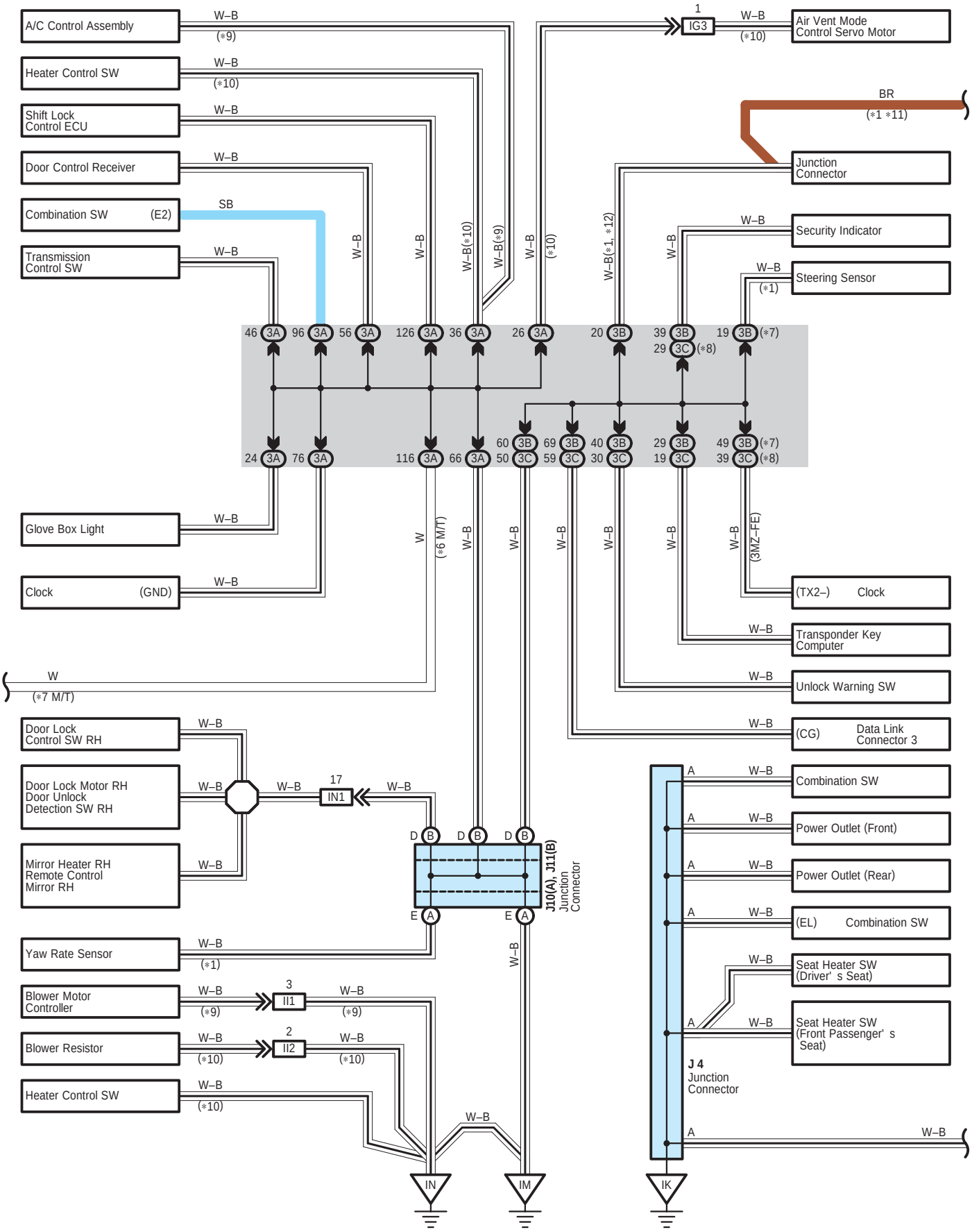

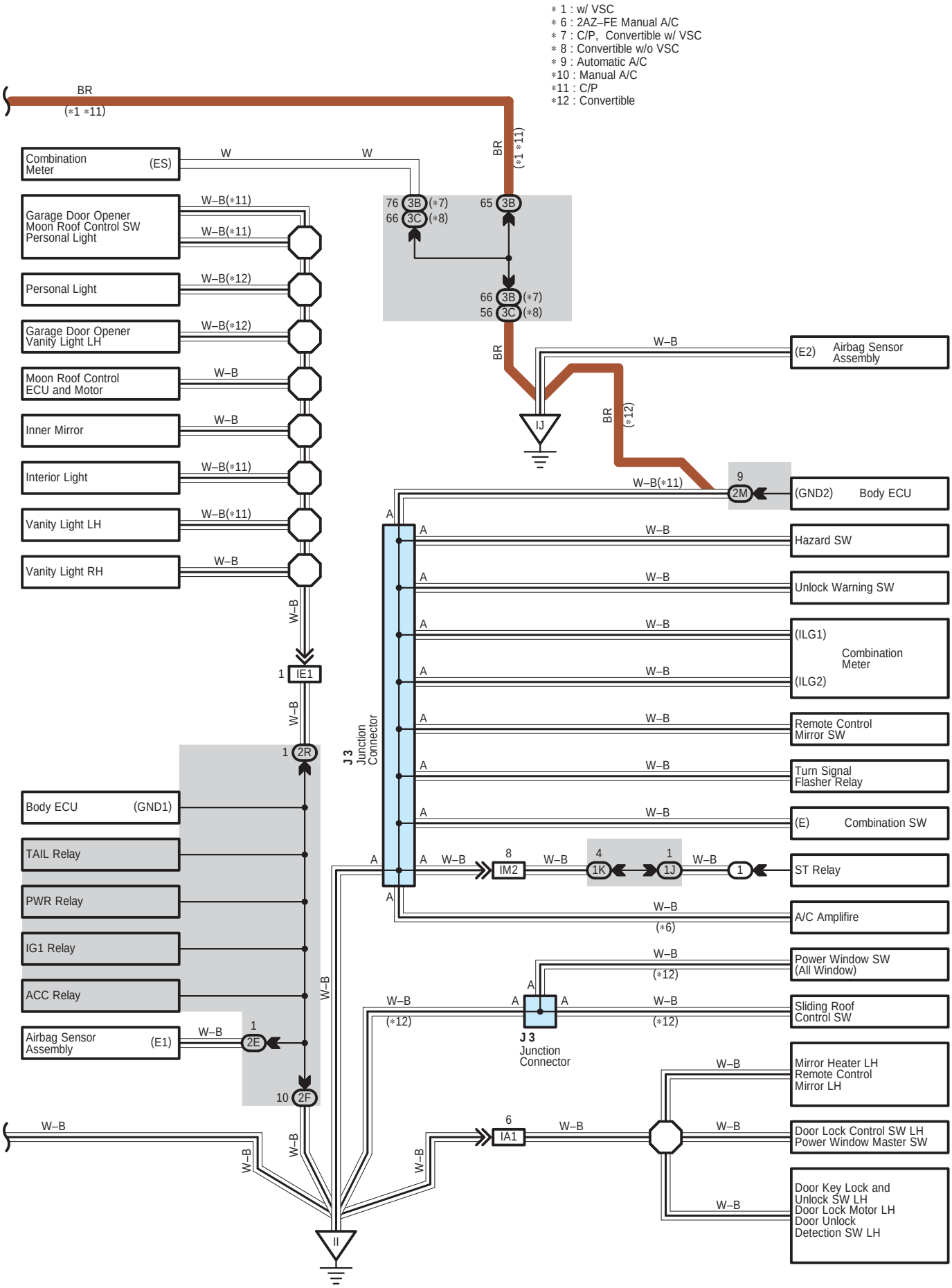
∗ 1 : w/ VSC
∗ 6 : 2AZ–FE Manual A/C
∗ 7 : C/P, Convertible w/ VSC
∗ 8 : Convertible w/o VSC
∗ 9 : Automatic A/C
∗10 : Manual A/C
∗11 : C/P
∗12 : Convertible
BR
(∗1 ∗11)
Combination Meter
(ES)
W
Garage Door Opener
Moon Roof Control SW
Personal Light
W–B(∗11)
Personal Light
W–B(∗12)
Garage Door Opener
Vanity Light LH
Moon Roof Control
ECU and Motor
W–B
Inner Mirror
Interior Light
Vanity Light LH
Vanity Light RH
76 3B (∗7)
66 3C (∗8)
65 3B
66 3B (∗7)
56 3C (∗8)
(∗12)
IJ
(E2)
Airbag Sensor
Assembly
9
2M
(GND2)
Body ECU
Hazard SW
Unlock Warning SW
(ILG1)
Combination
Meter
(ILG2)
Remote Control
Mirror SW
Turn Signal
Flasher Relay
(E)
Combination SW
ST Relay
A/C Amplifire
(∗6)
Power Window SW
(All Window)
Sliding Roof
Control SW
Mirror Heater LH
Remote Control
Mirror LH
Door Lock Control SW LH
Power Window Master SW
Door Key Lock and
Unlock SW LH
Door Lock Motor LH
Door Unlock
Detection SW LH
J 3
Junction
Connector
1 IE1
1 2R
Body ECU
(GND1)
TAIL Relay
PWR Relay
IG1 Relay
ACC Relay
Airbag Sensor
Assembly
(E1)
1 2E
10 2F
8 IM2
4 1K
1 1J
1
6 IA1
II

I GROUND POINT

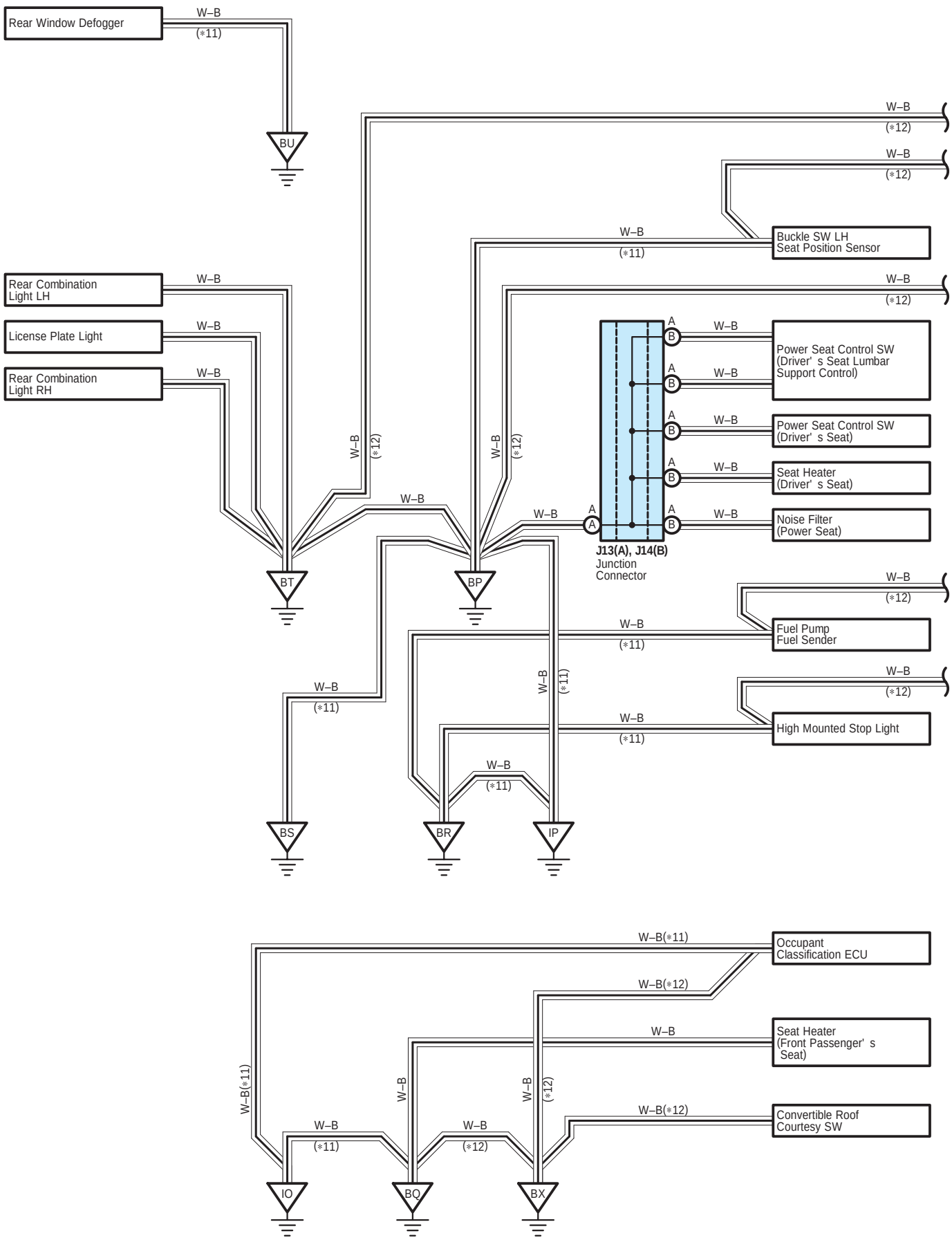

∗11 : C/P
∗12 : Convertible

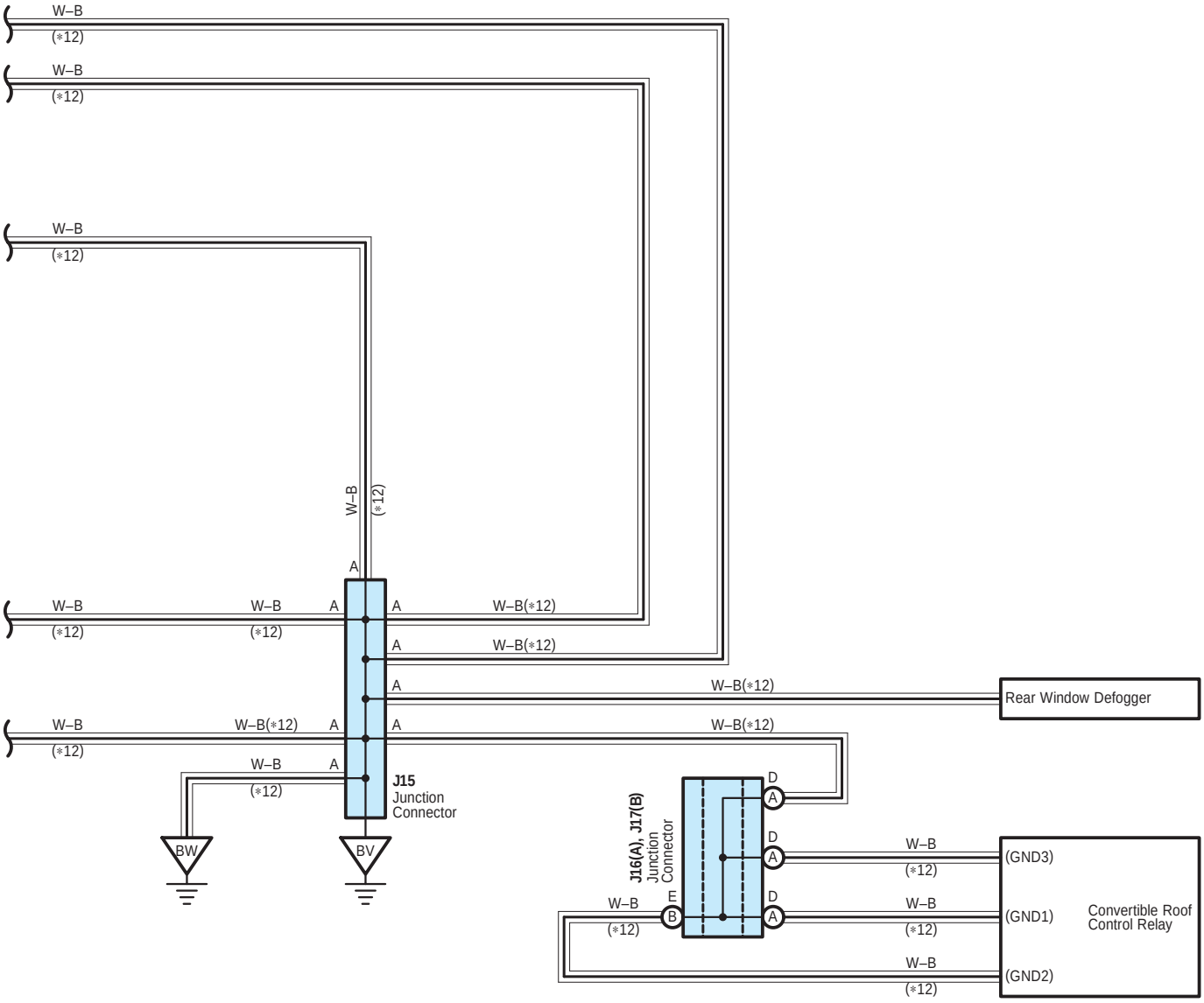

I GROUND POINT

: Parts Location

Code	See Page	Code		See Page	Code		See Page
J2	45 (C/P)	J4		47 (*1)	J13	A	52
	47 (*1)	J10	A	45 (C/P)	J14	B	52
J3	45 (C/P)			47 (*1)	J15		50 (*1)
	47 (*1)	J11	B	45 (C/P)	J16	A	50 (*1)
J4	45 (C/P)			47 (*1)	J17	B	50 (*1)

: Relay Blocks

Code	See Page	Relay Blocks (Relay Block Location)
1	24	Engine Room R/B (Engine Compartment Left)

: Junction Block and Wire Harness Connector

Code	See Page	Junction Block and Wire Harness (Connector Location)
1C	27	Engine Room Main Wire and Engine Room J/B (Engine Compartment Left)
1J		
1K	27	Engine Wire and Engine Room J/B (Engine Compartment Left)
2E	30	Instrument Panel Wire and Driver Side J/B (Lower Finish Panel)
2F		
2M		
2R		
3A	36 (*2)	Instrument Panel Wire and Passenger Side J/B (Instrument Panel Brace RH)
	37 (*3)	
3B	36 (*2)	
3C	37 (*3)	

* 1 : Convertible * 2 : C/P, Convertible w/ VSC * 3 : Convertible w/o VSC

: Connector Joining Wire Harness and Wire Harness

Code	See Page	Joining Wire Harness and Wire Harness (Connector Location)
EA1	54 (3MZ–FE)	Engine Room Main Wire and Engine Room No.2 Wire (Radiator Side Support LH)
	55 (2AZ–FE)	
EA2	54 (3MZ–FE)	
	55 (2AZ–FE)	
IA1	56 (C/P)	Front Door LH Wire and Instrument Panel Wire (Left Kick Panel)
	58 (*1)	
IE1	56 (C/P)	Instrument Panel Wire and Roof Wire (Inside of Front Left Pillar)
	58 (*1)	
IG3	56 (C/P)	Engine Room Main Wire and Instrument Panel Wire (Behind the Radio and Player)
	58 (*1)	
IG7	56 (C/P)	
	58 (*1)	
IG9	56 (C/P)	
IH1	57 (C/P)	Instrument Panel No.2 Wire and Instrument Panel Wire (Behind the Radio and Player)
	59 (*1)	
II1	57 (C/P)	Instrument Panel Wire and Instrument Panel No.3 Wire (Behind the Glove Box)
	59 (*1)	
II2	57 (C/P)	
	59 (*1)	
IJ1	57 (C/P)	Instrument Panel Wire and Instrument Panel Wire (Instrument Panel Reinforcement RH)
	59 (*1)	
IJ2	57 (C/P)	
IM1	57 (C/P)	Engine Wire and Instrument Panel Wire (Behind the Glove Box)
	59 (*1)	
IM2	57 (C/P)	
	59 (*1)	
IN1	57 (C/P)	Front Door RH Wire and Instrument Panel Wire (Right Kick Panel)
	59 (*1)	

* 1 : Convertible * 2 : C/P, Convertible w/ VSC * 3 : Convertible w/o VSC

I GROUND POINT

▽ : **Ground Points**

Code	See Page	Ground Points Location
EA	54 (3MZ–FE)	Right Fender
	55 (2AZ–FE)	
EB	54 (3MZ–FE)	
	55 (2AZ–FE)	
EC	54 (3MZ–FE)	Left Fender
	55 (2AZ–FE)	
ED	54 (3MZ–FE)	
	55 (2AZ–FE)	
EE	54 (3MZ–FE)	Right Side of Cylinder Head
EF	54 (3MZ–FE)	Left Side of Cylinder Head
EG	55 (2AZ–FE)	Intake Side of Cylinder Block
EH	55 (2AZ–FE)	Left Side of Cylinder Head
II	56 (C/P)	Cowl Side Panel LH
	58 (*1)	
IJ	56 (C/P)	Instrument Panel Brace LH
	58 (*1)	
IK	56 (C/P)	
	58 (*1)	
IL	56 (C/P)	Instrument Panel Brace RH
	58 (*1)	
IM	56 (C/P)	Instrument Panel Reinforcement RH
	58 (*1)	
IN	56 (C/P)	
	58 (*1)	
IO	56 (C/P)	Right Kick Panel
IP	56 (C/P)	Left Kick Panel
BP	60 (C/P)	Under the Driver's Seat
	61 (*1)	
BQ	60 (C/P)	Under the Front Passenger's Seat
	61 (*1)	
BR	60 (C/P)	Left Center Pillar
BS	60 (C/P)	Right Center Pillar
BT	60 (C/P)	Back Panel Center
	61 (*1)	
BU	60 (C/P)	Luggage Room Left
BV	61 (*1)	Front Side of Rear Quarter Panel LH
BW	61 (*1)	Near the Left Luggage Compartment Door
BX	61 (*1)	Under the Right Center Piller

* 1 : Convertible * 2 : C/P, Convertible w/ VSC * 3 : Convertible w/o VSC

J POWER SOURCE (Current Flow Chart)

The chart below shows the route by which current flows from the battery to each electrical source (Fusible Link, Circuit Breaker, Fuse, etc.) and other Parts.

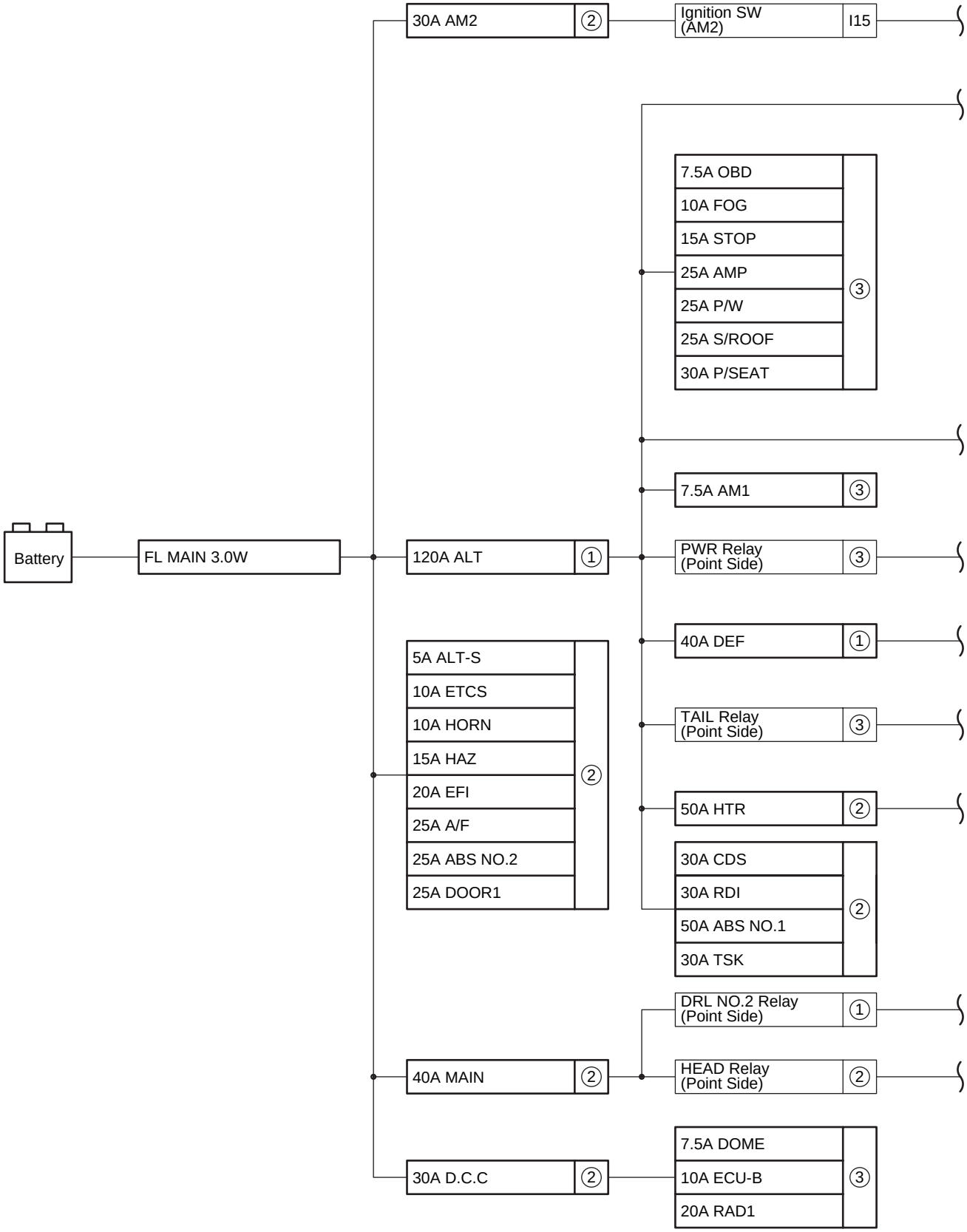

[LOCATION]

① : Engine Room R/B (See Page 24)

② : Engine Room J/B (See Page 26)

③ : Driver Side J/B (See Page 30)

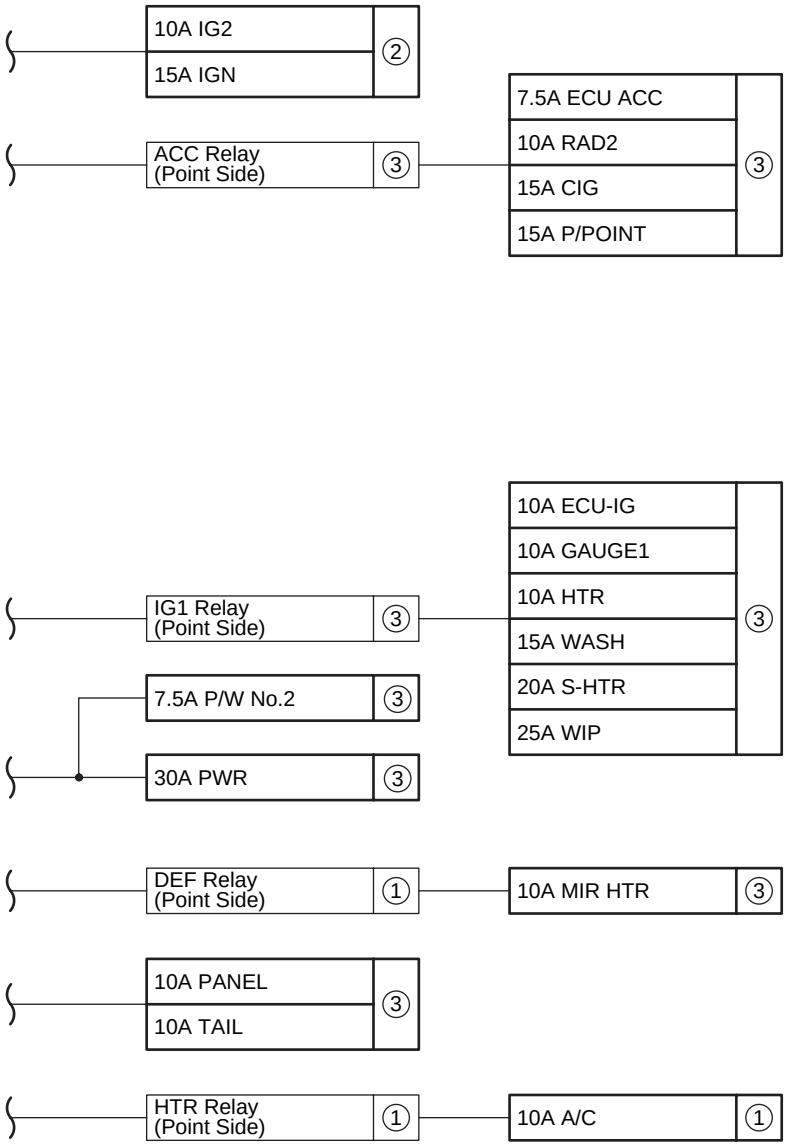

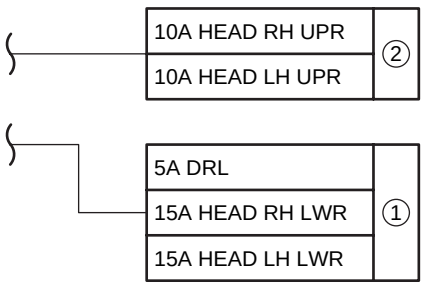

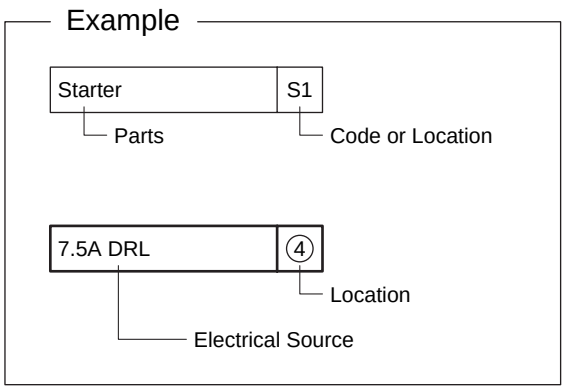

Engine Room R/B (See Page 24)

Fuse		System	Page
5A	DRL	Headlight	112
10A	A/C	Manual Air Conditioning	286
15A	HEAD LH LWR	Headlight	112
15A	HEAD RH LWR	Headlight	112
40A	DEF	Engine Control (2AZ–FE)	90
		Engine Control (3MZ–FE)	78
		Rear Window Defogger and Mirror Heater	244
120A	ALT	Automatic Light Control	118
		Charging	80
		Clock	246
		Electronically Controlled Transmission and A/T Indicator (2AZ–FE)	212
		Electronically Controlled Transmission and A/T Indicator (3MZ–FE)	204
		Engine Control (2AZ–FE)	90
		Engine Control (3MZ–FE)	78
		Fog Light	116
		Illumination	126
		Light Auto Turn Off System	120
		Power Window (Coupe)	160
		Starting and Ignition (2AZ–FE)	76
		Starting and Ignition (3MZ–FE)	72
		Taillight	136
		VSC and Tire Pressure Warning System	170

Engine Room J/B (See Page 26)

Fuse		System	Page
5A	ALT–S	Charging	76
10A	ETCS	Cruise Control (2AZ–FE)	198
		Cruise Control (3MZ–FE)	192
		Electronically Controlled Transmission and A/T Indicator (2AZ–FE)	212
		Electronically Controlled Transmission and A/T Indicator (3MZ–FE)	204
		Engine Control (2AZ–FE)	90
		Engine Control (3MZ–FE)	78
10A	HEAD LH UPR	Headlight	112
10A	HEAD RH UPR	Headlight	112
10A	HORN	Horn	240
		Theft Deterrent and Door Lock Control	144
10A	IG2	ABS and Tire Pressure Warning System	178
		Charging	80
		Combination Meter	266
		Cruise Control (2AZ–FE)	198
		Cruise Control (3MZ–FE)	192
		Electronically Controlled Transmission and A/T Indicator (2AZ–FE)	212

∗ These are the page numbers of the first page on which the related system is shown.

Fuse		System	Page
10A	IG2	Electronically Controlled Transmission and A/T Indicator (3MZ–FE)	204
		Engine Control (2AZ–FE)	90
		Engine Control (3MZ–FE)	78
		Engine Immobiliser System	102
		Seat Belt Warning	228
		SRS	185
		VSC and Tire Pressure Warning System	170
15A	HAZ	Turn Signal and Hazard Warning Light	132
15A	IGN	Clock	246
		Engine Control (2AZ–FE)	90
		Engine Control (3MZ–FE)	78
		Starting and Ignition (2AZ–FE)	72
		Starting and Ignition (3MZ–FE)	68
20A	EFI	Cruise Control (2AZ–FE)	198
		Cruise Control (3MZ–FE)	192
		Electronically Controlled Transmission and A/T Indicator (2AZ–FE)	212
		Electronically Controlled Transmission and A/T Indicator (3MZ–FE)	204
		Engine Control (2AZ–FE)	90
		Engine Control (3MZ–FE)	78
25A	ABS NO.2	ABS and Tire Pressure Warning System	178
		VSC and Tire Pressure Warning System	170
25A	A/F	Engine Control (3MZ–FE)	78
25A	DOOR1	Theft Deterrent and Door Lock Control	144
		Wireless Door Lock Control	150
30A	AM2	Charging	76
		Engine Control (2AZ–FE)	90
		Engine Control (3MZ–FE)	78
		Starting and Ignition (2AZ–FE)	72
		Starting and Ignition (3MZ–FE)	68
30A	CDS	Radiator Fan and Condenser Fan	272
30A	RDI	Radiator Fan and Condenser Fan	272
30A	TSK	Convertible Roof and Power Window (Convertible)	164
40A	MAIN	Automatic Light Control	118
		Headlight	112
		Light Auto Turn Off System	120
50A	ABS NO.1	ABS and Tire Pressure Warning System	178
		VSC and Tire Pressure Warning System	170
50A	HTR	Automatic Air Conditioning	278
		Manual Air Conditioning	286

Driver Side J/B (See Page 30)

Fuse		System	Page
7.5A	AM1	Convertible Roof and Power Window (Convertible)	164
		Electronically Controlled Transmission and A/T Indicator (2AZ–FE)	212

∗ These are the page numbers of the first page on which the related system is shown.

Fuse		System	Page
7.5A	AM1	Electronically Controlled Transmission and A/T Indicator (3MZ–FE)	204
		Engine Control (2AZ–FE)	90
		Engine Control (3MZ–FE)	78
		Starting and Ignition (2AZ–FE)	72
		Starting and Ignition (3MZ–FE)	68
7.5A	DOME	Clock	246
		Garage Door Opener	236
		Interior Light	122
		Wireless Door Lock Control	150
7.5A	ECU ACC	Automatic Light Control	118
		Clock	246
		Combination Meter	266
		Fog Light	116
		Headlight	112
		Interior Light	122
		Light Auto Turn Off System	120
		Moon Roof	158
		Multiplex Communication System (BEAN 2AZ–FE)	110
		Power Window (Coupe)	160
		Remote Control Mirror	232
		Shift Lock	220
		Theft Deterrent and Door Lock Control	144
		Wireless Door Lock Control	150
7.5A	OBD	Engine Control (2AZ–FE)	90
		Engine Control (3MZ–FE)	78
7.5A	P/W No.2	Convertible Roof and Power Window (Convertible)	164
10A	ECU–B	Automatic Air Conditioning	278
		Automatic Light Control	118
		Clock	246
		Combination Meter	266
		Convertible Roof and Power Window (Convertible)	164
		Engine Immobiliser System	102
		Fog Light	116
		Headlight	112
		Illumination	126
		Interior Light	122
		Key Reminder	142
		Light Auto Turn Off System	120
		Manual Air Conditioning	286
		Moon Roof	158
		Multiplex Communication System (BEAN 2AZ–FE)	110
		Multiplex Communication System (CAN 3MZ–FE)	104
		Navigation System and Audio System	252
		Power Window (Coupe)	160

∗ These are the page numbers of the first page on which the related system is shown.

Fuse		System	Page
10A	ECU–B	Seat Belt Warning	228
		SRS	185
		Theft Deterrent and Door Lock Control	144
		VSC and Tire Pressure Warning System	170
		Wireless Door Lock Control	150
10A	ECU–IG	ABS and Tire Pressure Warning System	178
		Automatic Glare–Resistant EC Mirror with Compass	234
		Automatic Light Control	118
		Convertible Roof and Power Window (Convertible)	164
		Fog Light	116
		Headlight	112
		Interior Light	122
		Light Auto Turn Off System	120
		Moon Roof	158
		Multiplex Communication System (BEAN 2AZ–FE)	110
		Multiplex Communication System (CAN 3MZ–FE)	104
		Power Window (Coupe)	160
		Theft Deterrent and Door Lock Control	144
		VSC and Tire Pressure Warning System	170
		Wireless Door Lock Control	150
10A	FOG	Fog Light	116
10A	GAUGE1	ABS and Tire Pressure Warning System	178
		Back–Up Light	140
		Charging	76
		Clock	246
		Combination Meter	266
		Convertible Roof and Power Window (Convertible)	164
		Cruise Control (2AZ–FE)	198
		Cruise Control (3MZ–FE)	192
		Electronically Controlled Transmission and A/T Indicator (2AZ–FE)	212
		Electronically Controlled Transmission and A/T Indicator (3MZ–FE)	204
		Key Reminder	142
		Navigation System and Audio System	252
		Seat Belt Warning	228
		Shift Lock	220
		Turn Signal and Hazard Warning Light	132
		VSC and Tire Pressure Warning System	170
10A	HTR	Automatic Air Conditioning	278
		Engine Control (2AZ–FE)	90
		Engine Control (3MZ–FE)	78
		Manual Air Conditioning	286
		Radiator Fan and Condenser Fan	272
		Rear Window Defogger and Mirror Heater	244

∗ These are the page numbers of the first page on which the related system is shown.

Fuse		System	Page
10A	MIR HTR	Engine Control (2AZ–FE)	90
		Engine Control (3MZ–FE)	78
		Rear Window Defogger and Mirror Heater	244
10A	PANEL	Clock	246
		Illumination	126
10A	RAD2	Audio System (Built–In Type Amplifier w/o Navigation System)	264
		Audio System (Separate Type Amplifier w/o Navigation System)	260
		Navigation System and Audio System	252
10A	TAIL	Engine Control (2AZ–FE)	90
		Engine Control (3MZ–FE)	78
		Fog Light	116
		Taillight	136
15A	CIG	Power Outlet	238
15A	P/POINT	Power Outlet	238
15A	STOP	ABS and Tire Pressure Warning System	178
		Cruise Control (2AZ–FE)	198
		Cruise Control (3MZ–FE)	192
		Electronically Controlled Transmission and A/T Indicator (2AZ–FE)	212
		Electronically Controlled Transmission and A/T Indicator (3MZ–FE)	204
		Engine Control (2AZ–FE)	90
		Engine Control (3MZ–FE)	78
		Shift Lock	220
		Stop Light	138
		VSC and Tire Pressure Warning System	170
15A	WASH	Wiper and Washer	242
20A	RAD1	Audio System (Built–In Type Amplifier w/o Navigation System)	264
		Audio System (Separate Type Amplifier w/o Navigation System)	260
		Navigation System and Audio System	252
20A	S–HTR	Seat Heater	226
25A	AMP	Audio System (Separate Type Amplifier w/o Navigation System)	260
		Navigation System and Audio System	252
25A	P/W	Power Window (Coupe)	160
25A	S/ROOF	Moon Roof	158
25A	WIP	Wiper and Washer	242
30A	P/SEAT	Power Seat	222
30A	PWR	Convertible Roof and Power Window (Convertible)	164
		Power Window (Coupe)	160

∗ These are the page numbers of the first page on which the related system is shown.

K CONNECTOR LIST

A 1
Black

A 2
Gray

A 3
Gray

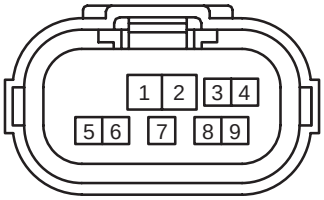

A 4
Gray

A 5

A 6
Dark Gray

A 7
Dark Gray

A 8
Dark Gray

A 9
Yellow

A10
Yellow

A11

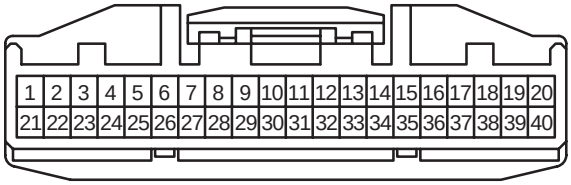

A12
Black

A13
Black

A14

A16

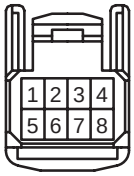

A17
Black

A18

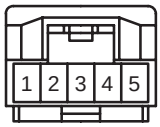

A19

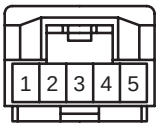

A20
(Automatic A/C)

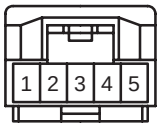

A20
(Manual A/C)

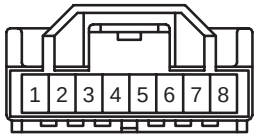

A21
Yellow

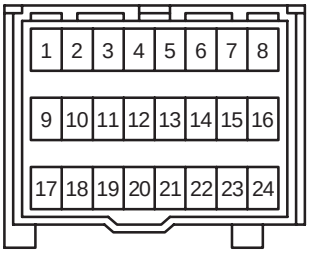

A22
Yellow

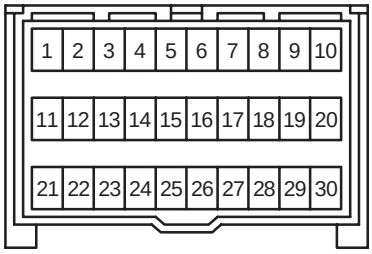

A23
Yellow

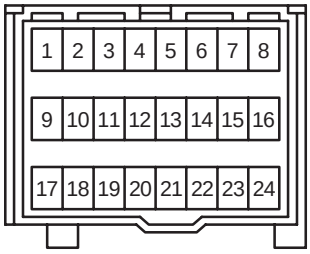

A24
Black

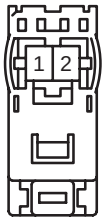

A25
Orange

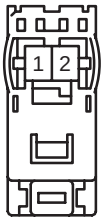

A26
Yellow

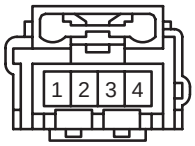

A27

A28
(C/P) Gray

A28
(Convertible) Gray

A29
Gray

A30

A31

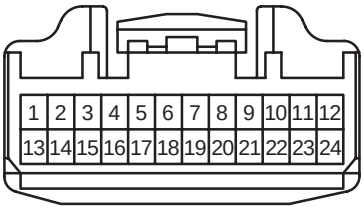

A32

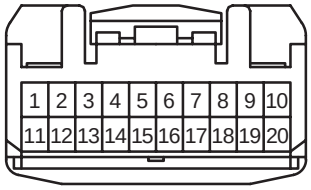

A33

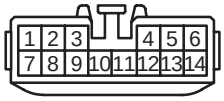

B 1
Gray

B 2
Gray

B 3

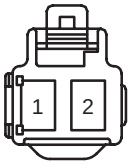

B 4
Black

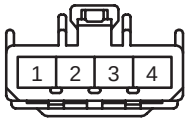

B 5
Black

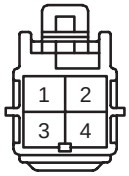

B 6

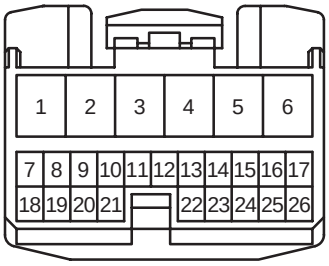

B 7

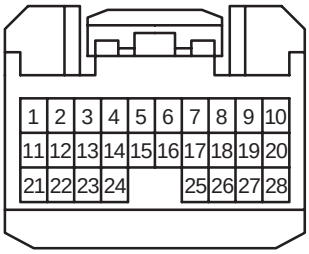

B 8

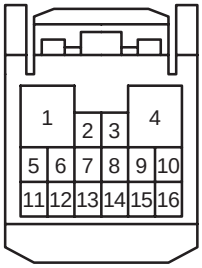

B 9

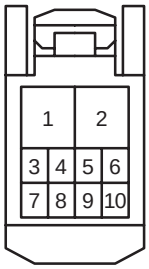

B10

B11

C 1
Black

C 2
Gray

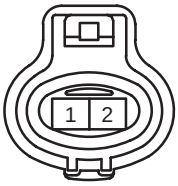

C 3
Black

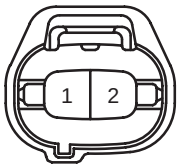

C 4
(2AZ–FE) Dark Gray

C 4
(3MZ–FE) Black

C 5

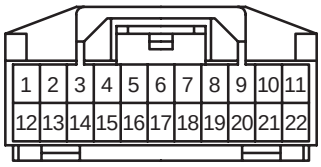

C 6

C 7

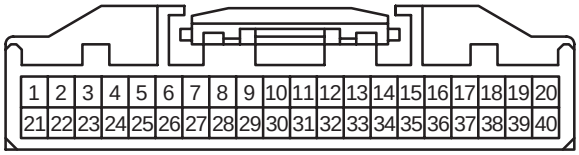

C 8

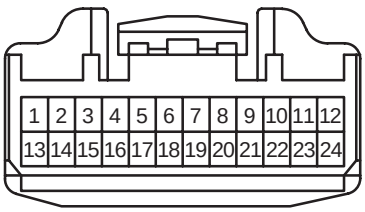

C 9

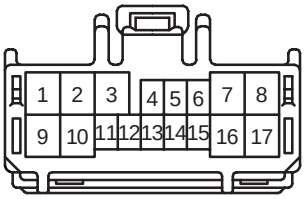

C10
Black

C11
Black

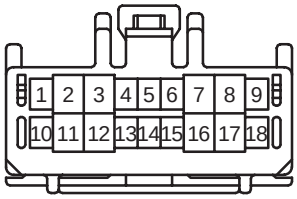

C12

C13
Yellow

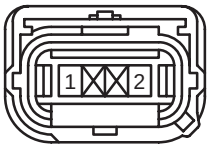

C14
Yellow

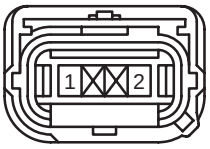

C15
Yellow

C16
Yellow

C17

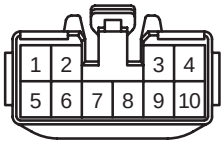

C18

C19

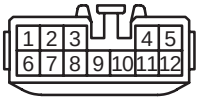

C20

C21

C22

C23

D 1
Gray

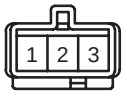

D 2
Black

D 3

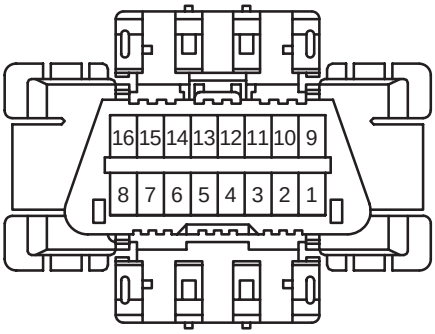

D 4

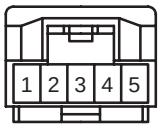

D 5
Black

D 6
Black

D 7

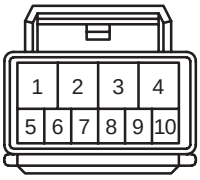

D 8

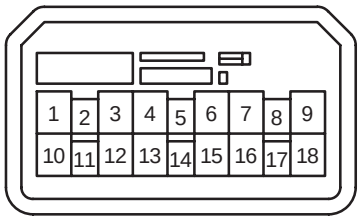

D 9
Black

D10

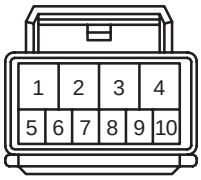

D11
(C/P) Yellow

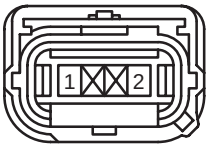

D11
(Convertible) Yellow

D12
(C/P) Yellow

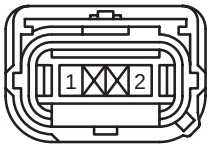

D12
(Convertible) Yellow

E 1
Gray

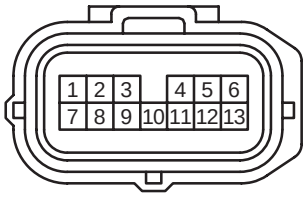

E 2
(2AZ–FE) Black

E 2
(3MZ–FE) Dark Gray

E 3
Black

E 4

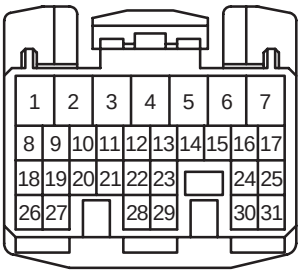

E 5

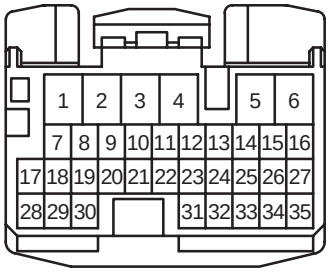

E 6

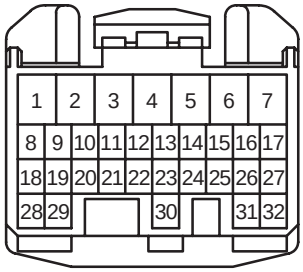

E 7

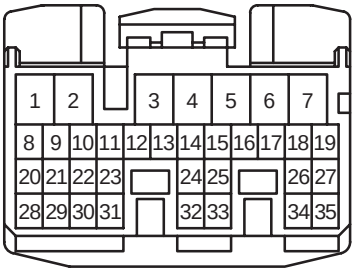

E 8

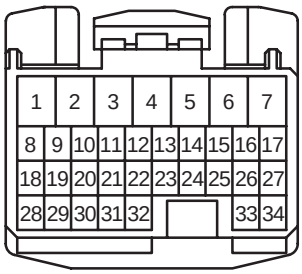

F 1
Black

F 2
Black

F 3
Gray

F 4
Gray

F 5
Black

F 6

F 7

F 8

G 1

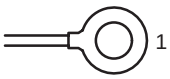

G 2
Black

G 3
Black

G 4

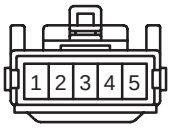

G 5
Blue

G 6

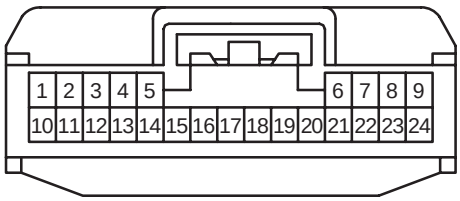

K CONNECTOR LIST

*1 : 2AZ–FE Manual A/C
*2 : 3MZ–FE Manual A/C

H 1
Black

H 2
Black

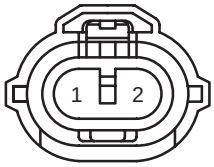

H 3
Black

H 4
Black

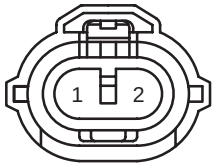

H 5

H 6
Dark Gray

H 7
Black

H 8
Black

H 9
Black

H10
(C/P)

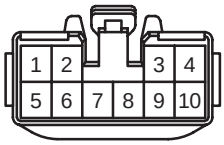

H10
(Convertible) Black

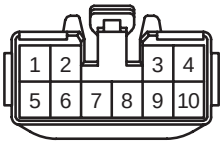

H11

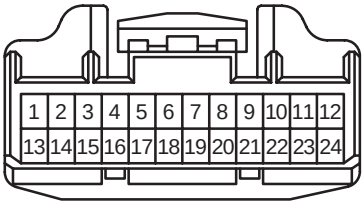

H12
(*1) Black

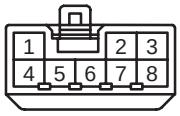

H12
(*2)

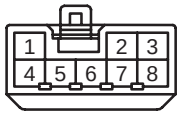

H13
(C/P)

H13
(Convertible)

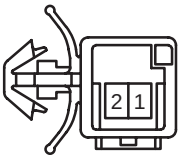

I 1
Black

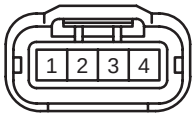

I 2
Black

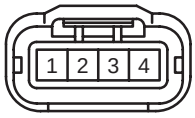

I 3
Black

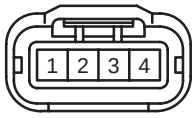

I 4
Black

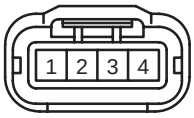

I 5
Black

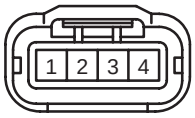

I 6
Black

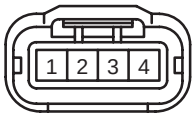

I 7
(2AZ–FE) Gray

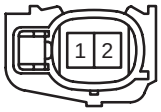

I 7
(3MZ–FE) Gray

I 8
(2AZ–FE) Gray

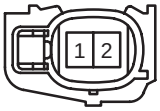

I 8
(3MZ–FE) Gray

I 9
(2AZ–FE) Gray

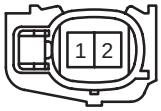

I 9
(3MZ–FE) Gray

I10
(2AZ–FE) Gray

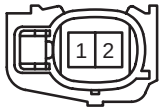

I10
(3MZ–FE) Gray

I11
Gray

I12
Gray

I14
Black

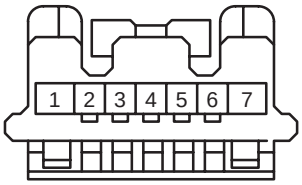

I15

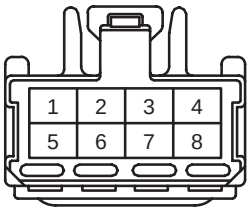

I16
Black

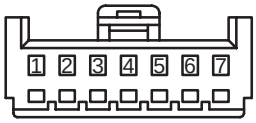

I17
Gray

J 1

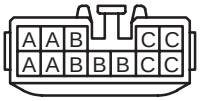

J 2
Dark Gray

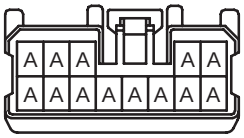

J 3

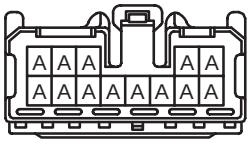

J 4

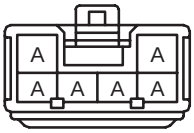

J 5

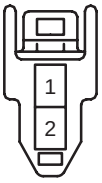

J 6

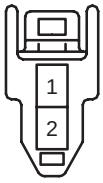

J 7

J 8

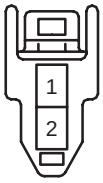

J 9

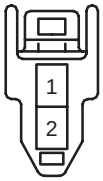

J10
Black

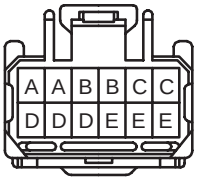

J11
Black

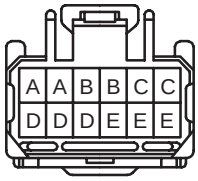

J12
(C/P)

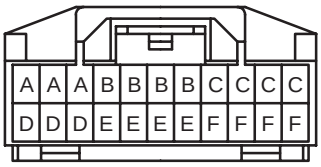

J12
(Convertible) Black

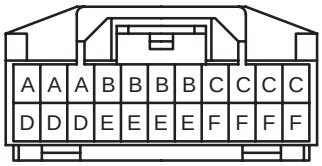

J13
Gray

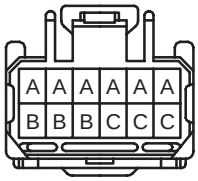

J14
Gray

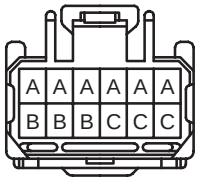

J15

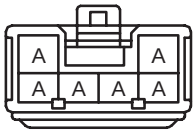

J16

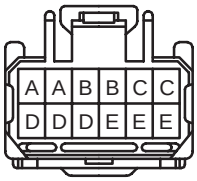

J17

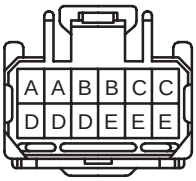

K 1
Black

K 2
Black

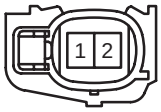

K 3
Gray

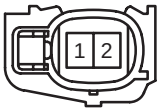

K CONNECTOR LIST

K 4
Gray

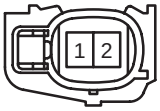

L 1
Gray

L 2
(C/P)

L 2
(Convertible) Gray

L 3
Black

M 1
Black

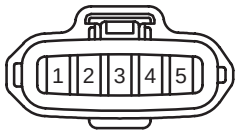

M 2

M 3

M 4

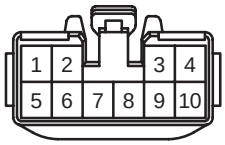

N 1
Gray

N 2
Gray

N 4

N 5

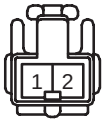

N 7
Black

O 1
Gray

O 2
Black

O 3
Gray

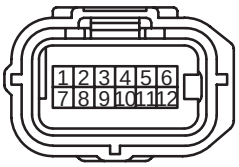

O 4
Black

O 5
Gray

O 6
Gray

O 7
Black

P 1
Black

P 2
Gray

P 3

P 4

P 5

P 6
Black

P 7
Black

P 8
Black

P 9

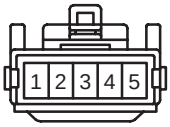

P10
Yellow

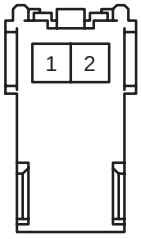

P11
Yellow

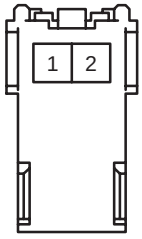

P12

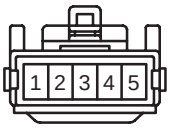

P13
Black

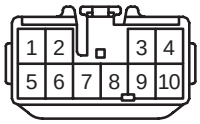

P14

P15

P16

P17

P18
Gray

P19
Black

P20

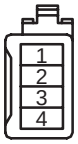

Q 1
Black

Q 2
Black

R 1
Gray

R 2

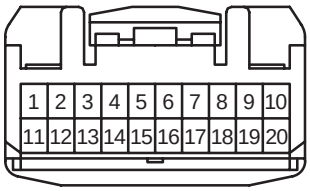

R 3

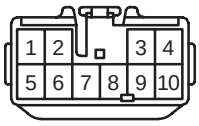

R 4
Blue

R 5
Gray

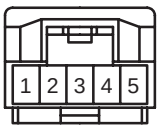

R 6

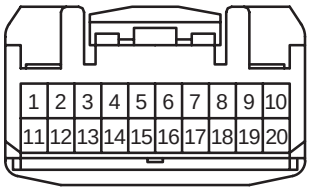

R 7
Blue

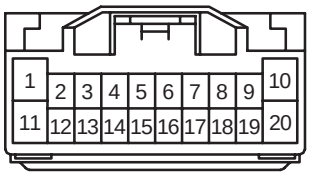

R 8
Black

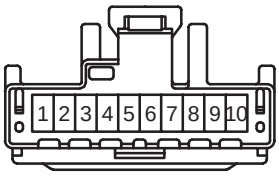

R 9

R10

R11
(C/P)

R11
(Convertible)

R12
(C/P)

R12
(Convertible)

R13
Black

R14
Black

R15
Gray

S 1
Black

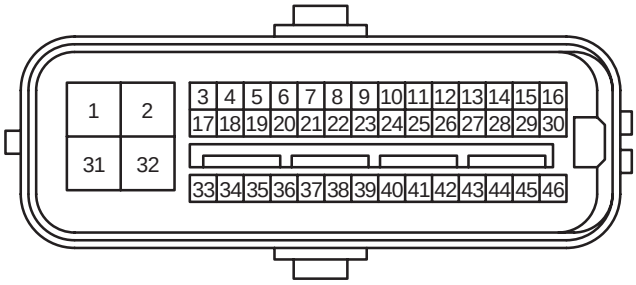

K CONNECTOR LIST

S 2
Black

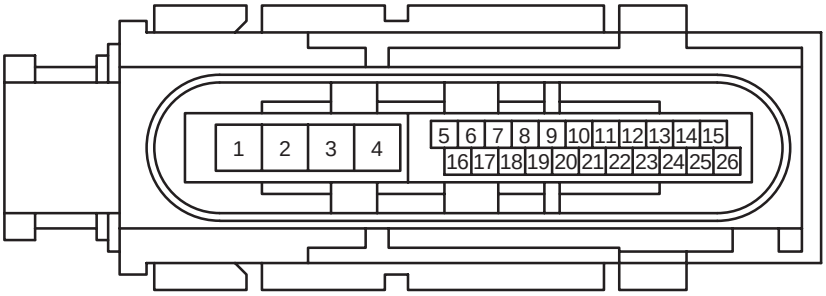

S 3
Black

S 4

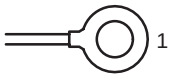

S 5
Black

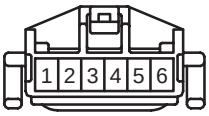

S 6
Blue

S 7

S 8

S 9

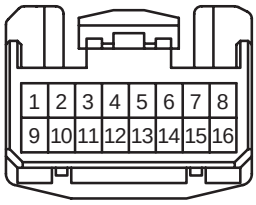

S10

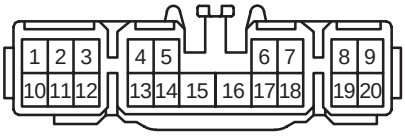

S11

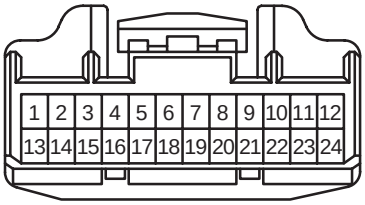

S12
Blue

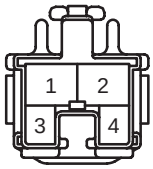

S13

S14
Yellow

S15
Yellow

S16

S17
Gray

T 1
Black

T 2
Black

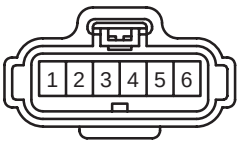

T 3
Black

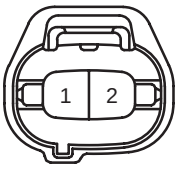

T 4
Black

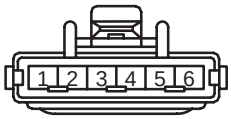

T 5

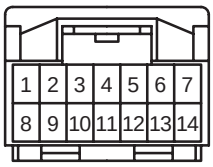

T 6
Black

T 7

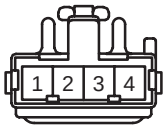

T 8

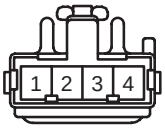

U 1

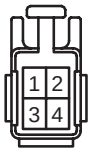

U 2

V 2
Brown

V 3
Blue

V 4
Blue

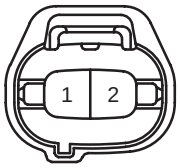

V 5
(2AZ–FE) Black

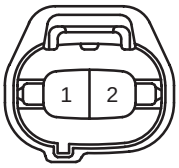

V 5
(3MZ–FE) Blue

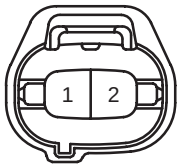

V 6
Black

V 7
Black

V 8
Black

V 9
Black

V10
Black

V11
Black

V12

V13
(C/P)

V13
(Convertible) Blue

V14
Black

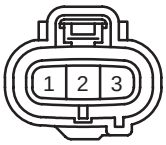

V15
Black

W 1
Black

W 2
Black

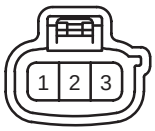

W 3
Gray

W 4
Gray

W 5

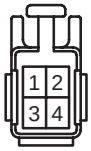

Y 1
Black

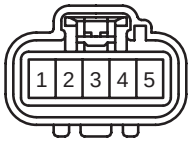

Z 1

Z 2

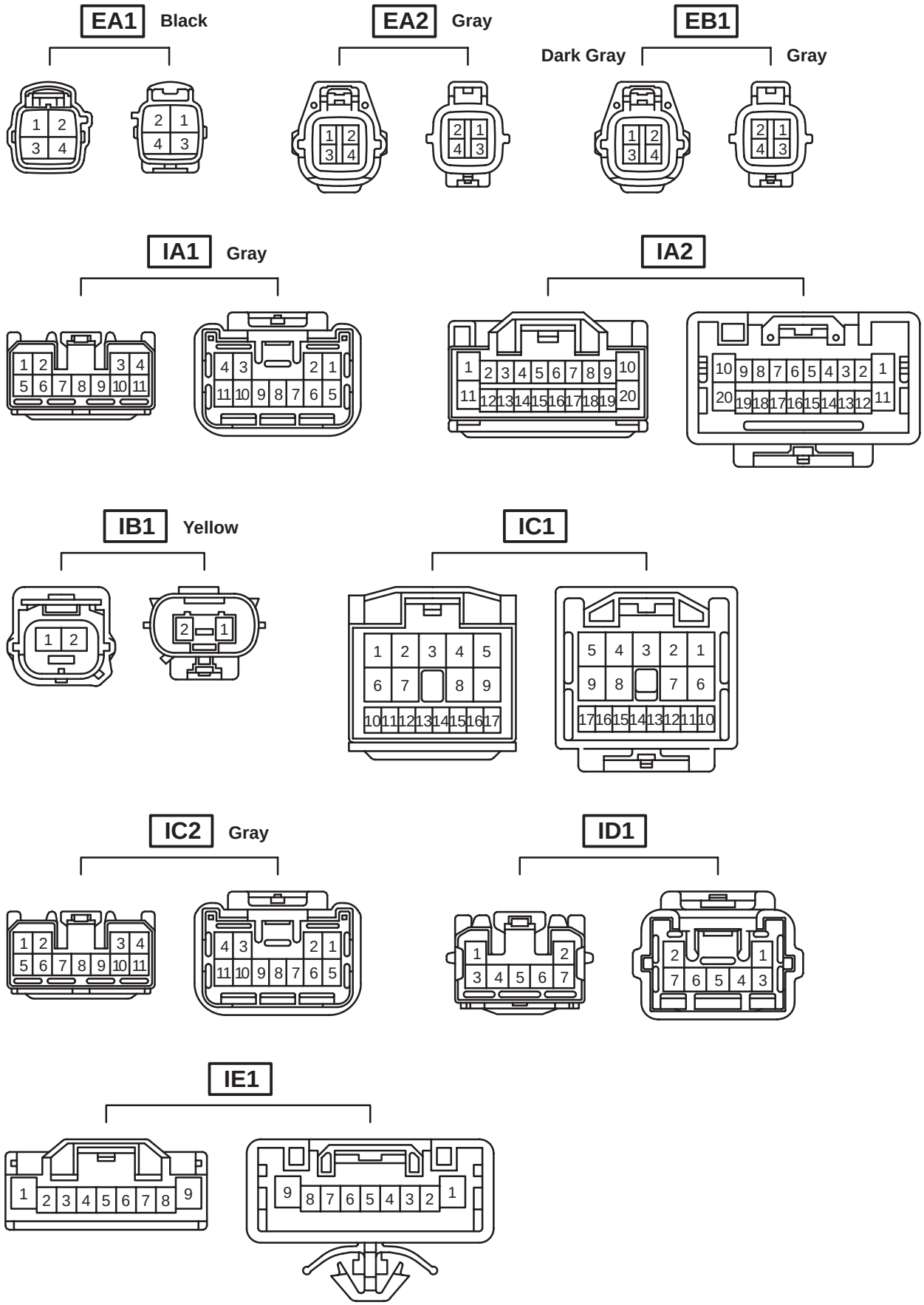
EA1 Black
EA2 Gray
EB1
Dark Gray
Gray
IA1 Gray
IA2
IB1 Yellow
IC1
IC2 Gray
ID1
IE1

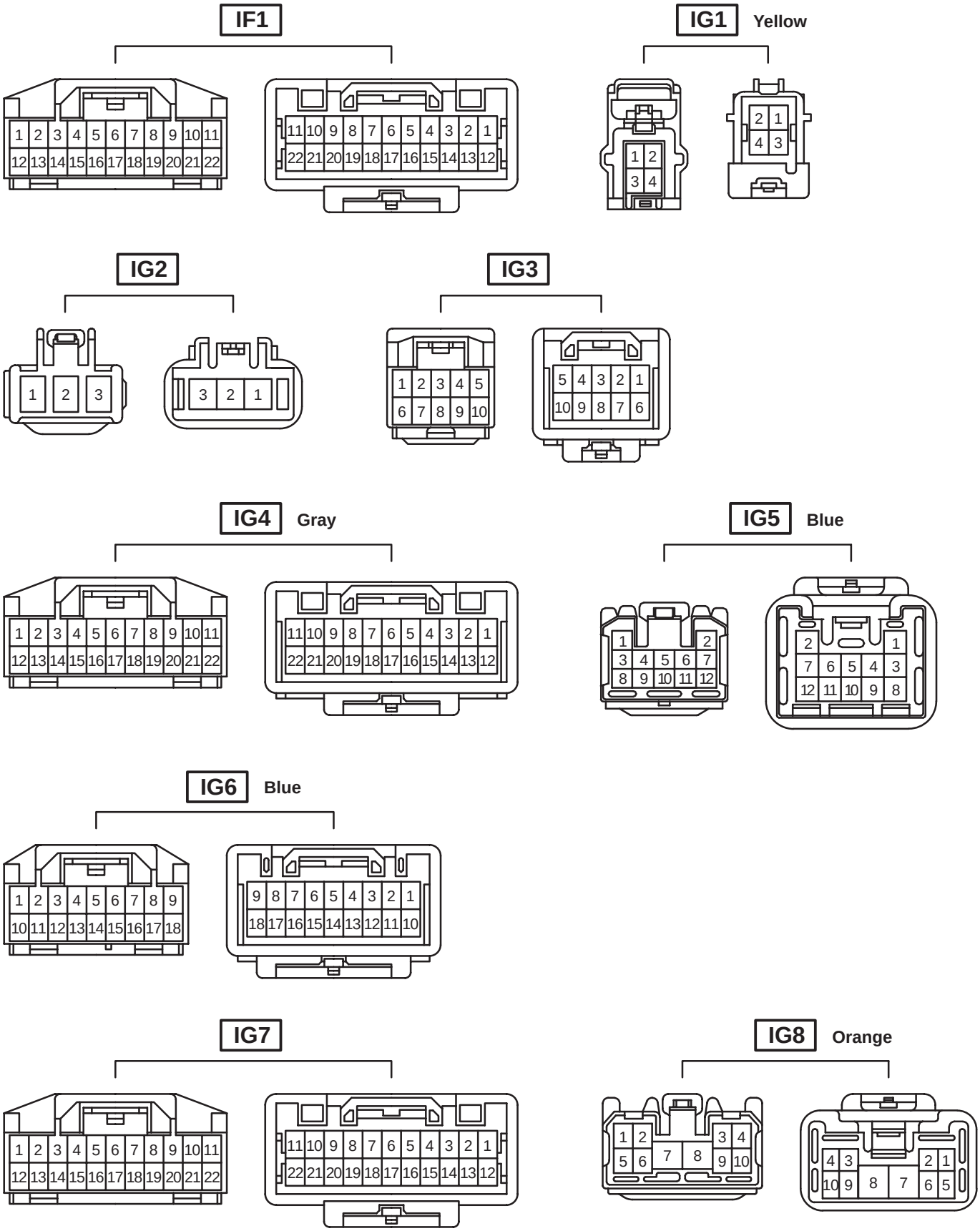
IF1
1 2 3 4 5 6 7 8 9 10 11
12 13 14 15 16 17 18 19 20 21 22
11 10 9 8 7 6 5 4 3 2 1
22 21 20 19 18 17 16 15 14 13 12
IG1 Yellow
1 2
3 4
2 1
4 3
IG2
1 2 3
3 2 1
IG3
1 2 3 4 5
6 7 8 9 10
5 4 3 2 1
10 9 8 7 6
IG4 Gray
1 2 3 4 5 6 7 8 9 10 11
12 13 14 15 16 17 18 19 20 21 22
11 10 9 8 7 6 5 4 3 2 1
22 21 20 19 18 17 16 15 14 13 12
IG5 Blue
1 2
3 4 5 6 7
8 9 10 11 12
2 1
7 6 5 4 3
12 11 10 9 8
IG6 Blue
1 2 3 4 5 6 7 8 9
10 11 12 13 14 15 16 17 18
9 8 7 6 5 4 3 2 1
18 17 16 15 14 13 12 11 10
IG7
1 2 3 4 5 6 7 8 9 10 11
12 13 14 15 16 17 18 19 20 21 22
11 10 9 8 7 6 5 4 3 2 1
22 21 20 19 18 17 16 15 14 13 12
IG8 Orange
1 2
5 6
7
8
3 4
9 10
4 3
10 9
8
7
2 1
6 5

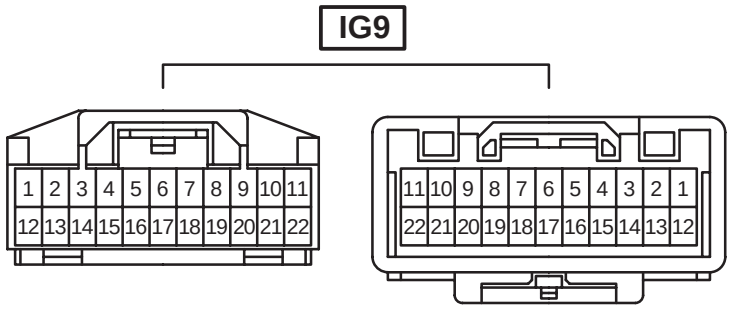
IG9
1 2 3 4 5 6 7 8 9 10 11
12 13 14 15 16 17 18 19 20 21 22
11 10 9 8 7 6 5 4 3 2 1
22 21 20 19 18 17 16 15 14 13 12

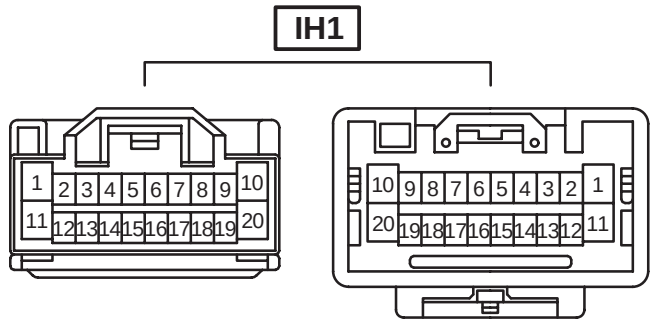
IH1
1 2 3 4 5 6 7 8 9 10
11 12 13 14 15 16 17 18 19 20
10 9 8 7 6 5 4 3 2 1
20 19 18 17 16 15 14 13 12 11

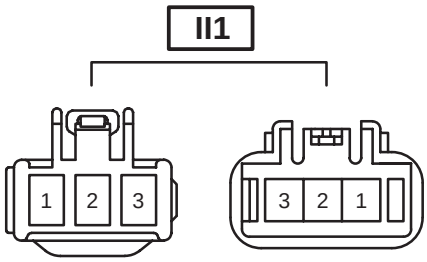
II1
1 2 3
3 2 1

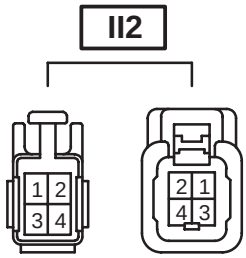
II2
1 2
3 4
2 1
4 3

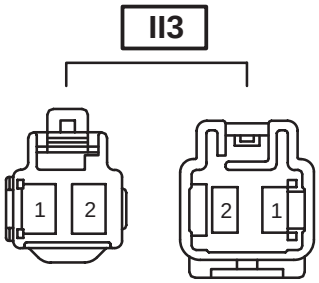
II3
1 2
2 1

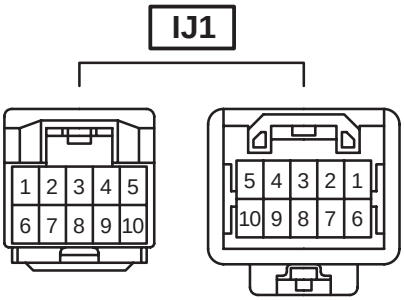
IJ1
1 2 3 4 5
6 7 8 9 10
5 4 3 2 1
10 9 8 7 6

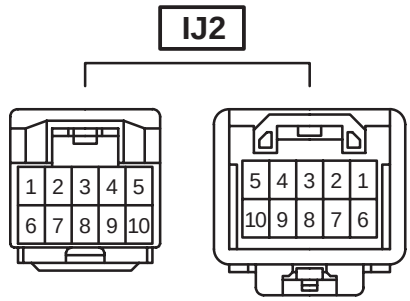
IJ2
1 2 3 4 5
6 7 8 9 10
5 4 3 2 1
10 9 8 7 6

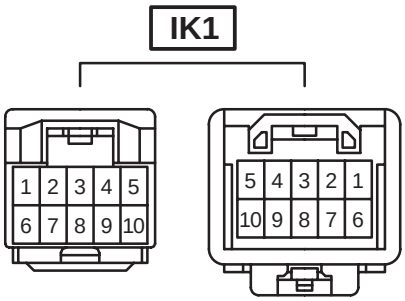
IK1
1 2 3 4 5
6 7 8 9 10
5 4 3 2 1
10 9 8 7 6

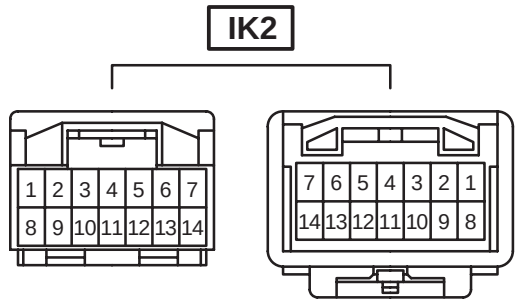
IK2
1 2 3 4 5 6 7
8 9 10 11 12 13 14
7 6 5 4 3 2 1
14 13 12 11 10 9 8

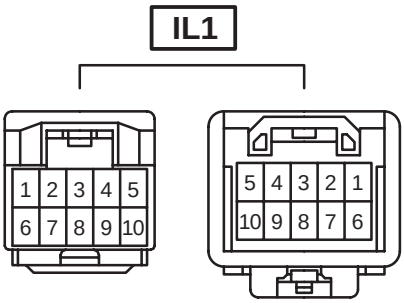
IL1
1 2 3 4 5
6 7 8 9 10
5 4 3 2 1
10 9 8 7 6

IM1

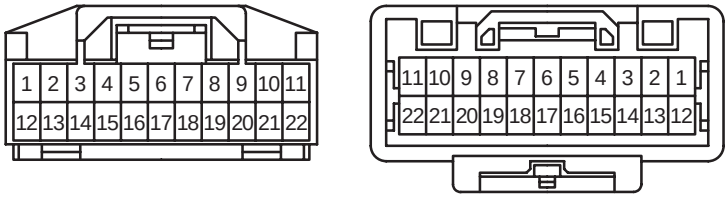

IM2 Gray

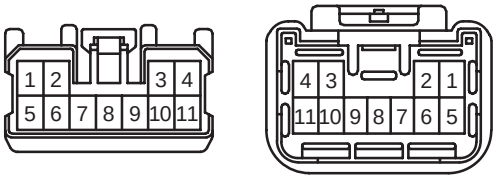

IN1

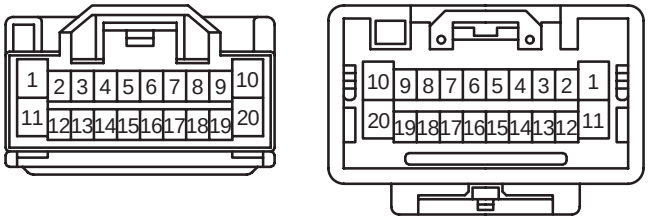

IN2 Gray

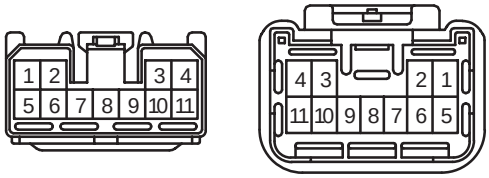

IO1 Gray

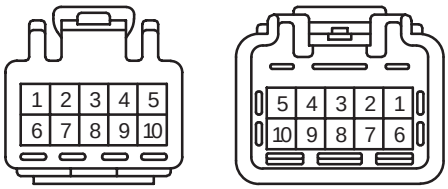

IO2

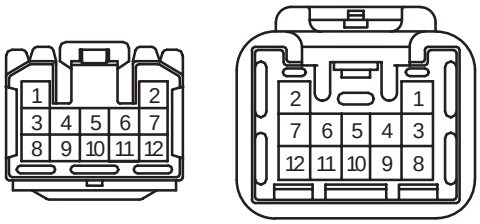

IP1 Yellow

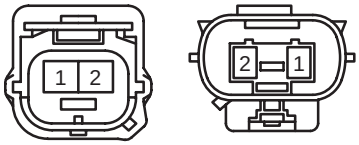

IR1

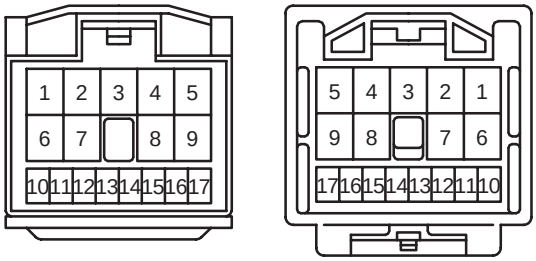

IR2 Gray

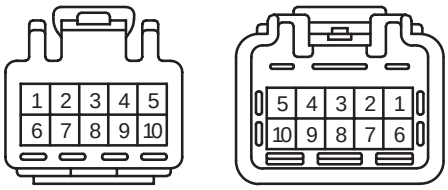

L PART NUMBER OF CONNECTORS

Code	Part Name	Part Number
A 1	A/C Ambient Temp. Sensor	90980–11070
A 2	A/C Lock Sensor	90980–11016
	A/C Magnetic Clutch	
A 3	A/T Indicator Light SW	90980–12362
	Back–Up Light SW	
	Park/Neutral Position SW	
A 4	ABS Speed Sensor Front LH	90980–11002
A 5	ABS Speed Sensor Front RH	
A 6	Air Fuel Ratio Sensor (Bank 1 Sensor 1)	90980–11178
A 7	Air Fuel Ratio Sensor (Bank 1 Sensor 1)	
A 8	Air Fuel Ratio Sensor (Bank 2 Sensor 1)	
A 9	Airbag Sensor Front LH	90980–11898
A10	Airbag Sensor Front RH	
A11	A/C Control Assembly	90980–12169
A12	A/C Room Temp. Sensor	90980–11918
A13	A/C Solar Sensor	
A14	A/C Thermistor	
A16	A/T Shift Lever Illumination	90980–12551
	Transmission Control SW	
A17	Accelerator Pedal Position Sensor	90980–11144
A18	Air Inlet Control Servo Motor	90980–11909
A19	Air Mix Control Servo Motor	
A20	Air Vent Mode Control Servo Motor (Automatic A/C)	90980–11909
	Air Vent Mode Control Servo Motor (Manual A/C)	90980–11989
A21	Airbag Sensor Assembly	90980–12392
A22	Airbag Sensor Assembly	90980–12391
A23	Airbag Sensor Assembly	90980–12390
A24	Airbag Squib (Front Passenger Airbag Assembly)	90980–12219
A25	Airbag Squib (Front Passenger Airbag Assembly)	90980–12224
A26	Airbag Squib (Steering Wheel Pad)	90980–12160
A27	Automatic Light Control Sensor	90980–11107
A28	ABS Speed Sensor Rear LH (C/P)	90980–11060
	ABS Speed Sensor Rear LH (Convertible)	90980–10859
A29	ABS Speed Sensor Rear RH	90980–11060
A30	Antenna Amplifier	90980–10871
A31	A/C Control Assembly	90980–12554
A32	A/C Control Assembly	90980–12259
A33	A/C Amplifier	90980–10807
B 1	Back–Up Light SW	90980–11250
B 2	Brake Fluid Level Warning SW	90980–11207
B 3	Blower Motor	90980–10903
B 4	Blower Motor Controller	90980–11676
B 5	Blower Resistor	90980–11136

Code	Part Name	Part Number
B 6	Body ECU	90980–12561
B 7	Body ECU	90980–12330
B 8	Body ECU	90980–12329
B 9	Body ECU	90980–12328
B10	Buckle SW LH	90980–11034
	Seat Position Sensor	
B11	Buckle SW RH	90980–10947
C 1	Camshaft Position Sensor	
C 2	Condenser Fan Motor	90980–10928
C 3	Counter Gear Speed Sensor	90980–11156
C 4	Crankshaft Position Sensor	90980–10947
C 5	Clock	90980–11915
C 6	Clutch Start SW	90980–10825
C 7	Combination Meter	90980–12170
C 8	Combination Meter	90980–12554
C 9	Combination SW	90980–11672
C10	Combination SW	90980–12552
C11	Combination SW	90980–11594
C12	Cruise Control Clutch SW	90980–10906
C13	Curtain Shield Airbag Sensor LH	90980–12241
C14	Curtain Shield Airbag Sensor RH	
C15	Curtain Shield Airbag Squib LH	90980–11886
C16	Curtain Shield Airbag Squib RH	
C17	Convertible Roof Control Relay	90980–10801
C18	Convertible Roof Control Relay	90980–12135
C19	Convertible Roof Control Relay	90980–10803
C20	Convertible Roof Courtesy SW	90980–11003
C21	Convertible Roof Motor LH	90980–11162
C22	Convertible Roof Motor RH	
C23	Courtesy Light Rear RH	90980–11148
D 1	Diode (A/C No.1)	90980–11071
D 2	Diode (A/C No.2)	90980–10962
D 3	Data Link Connector 3	90980–11665
D 4	Door Control Receiver	90980–11909
D 5	Door Courtesy SW LH	90980–10871
D 6	Door Courtesy SW RH	
D 7	Door Key Lock and Unlock SW LH	90980–12226
	Door Lock Motor LH	
	Door Unlock Detection SW LH	
D 8	Door Lock Control SW LH	90980–12122
	Power Window Master SW	
D 9	Door Lock Control SW RH	90980–10797
D10	Door Lock Motor RH	90980–12226
	Door Unlock Detection SW RH	

Note: Not all of the above part numbers of the connector are established for the supply.

Code	Part Name	Part Number
D11	Door Side Airbag Sensor LH (C/P)	90980–12241
	Door Side Airbag Sensor LH (Convertible)	90980–11856
D12	Door Side Airbag Sensor RH (C/P)	90980–12241
	Door Side Airbag Sensor RH (Convertible)	90980–11856
E 1	Electronically Controlled Transmission Solenoid	90980–12326
E 2	Engine Coolant Temp. Sensor (2AZ–FE)	90980–10735
	Engine Coolant Temp. Sensor (3MZ–FE)	90980–10737
E 3	Engine Hood Courtesy SW	90980–11003
E 4	Engine Control Module	90980–12525
E 5	Engine Control Module	90980–12529
E 6	Engine Control Module	90980–12526
E 7	Engine Control Module	90980–12528
E 8	Engine Control Module	90980–12527
F 1	Front Fog Light LH	90980–11095
F 2	Front Fog Light RH	
F 3	Front Parking Light LH	90980–11020
	Front Turn Signal Light LH	
F 4	Front Parking Light RH	
	Front Turn Signal Light RH	
F 5	Front Wiper Motor	90980–11599
F 6	Front Door Speaker LH	90980–10935
F 7	Front Door Speaker RH	
F 8	Fuel Pump	90980–11077
	Fuel Sender	
G 1	Generator	90980–09213
G 2	Generator	90980–11964
G 3	Glove Box Light	90980–11098
G 4	Garage Door Opener	90980–10789
	Moon Roof Control SW	
	Personal Light	
G 5	Garage Door Opener	90980–10621
	Vanity Light LH	
G 6	Gateway ECU	90980–12404
H 1	Headlight LH (High)	90980–11095
H 2	Headlight LH (Low)	82824–60460
H 3	Headlight RH (High)	90980–11095
H 4	Headlight RH (Low)	82824–60460
H 5	Heated Oxygen Sensor (Bank 1 Sensor 2)	90980–11028
H 6	Heated Oxygen Sensor (Bank 1 Sensor 2)	90980–10869
H 7	Heated Oxygen Sensor (Bank 2 Sensor 2)	90980–11028
H 8	Horn LH	90980–10619
H 9	Horn RH	
H10	Hazard SW	90980–10801
H11	Heater Control SW	90980–12200
H12	Heater Control SW	90980–10926

Code	Part Name	Part Number
H13	High Mounted Stop Light (C/P)	90980–10860
	High Mounted Stop Light (Convertible)	90980–12062
I 1	Ignition Coil and Igniter No.1	90980–11885
I 2	Ignition Coil and Igniter No.2	
I 3	Ignition Coil and Igniter No.3	
I 4	Ignition Coil and Igniter No.4	
I 5	Ignition Coil and Igniter No.5	
I 6	Ignition Coil and Igniter No.6	
I 7	Injector No.1 (2AZ–FE)	90980–11875
	Injector No.1 (3MZ–FE)	90980–11153
I 8	Injector No.2 (2AZ–FE)	90980–11875
	Injector No.2 (3MZ–FE)	90980–11153
I 9	Injector No.3 (2AZ–FE)	90980–11875
	Injector No.3 (3MZ–FE)	90980–11153
I10	Injector No.4 (2AZ–FE)	90980–11875
	Injector No.4 (3MZ–FE)	90980–11153
I11	Injector No.5	90980–11153
I12	Injector No.6	
I14	Ignition Key Cylinder Light	90980–12092
	Transponder Key Amplifier	
I15	Ignition SW	90980–11615
I16	Inner Mirror	90980–11794
I17	Interior Light	90980–10908
J 1	Junction Connector	90980–10803
J 2	Junction Connector	90980–12346
J 3	Junction Connector	90980–11542
J 4	Junction Connector	90980–10976
J 5	Junction Connector	90980–12355
J 6	Junction Connector	
J 7	Junction Connector	90980–10871
J 8	Junction Connector	90980–12355
J 9	Junction Connector	
J10	Junction Connector	90980–11661
J11	Junction Connector	
J12	Junction Connector	90980–11915
J13	Junction Connector	90980–11661
J14	Junction Connector	
J15	Junction Connector	90980–10976
J16	Junction Connector	90980–11661
J17	Junction Connector	
K 1	Keyless Buzzer	90980–11142
K 2	Knock Sensor (Bank 1)	90980–11875
K 3	Knock Sensor (Bank 1)	
K 4	Knock Sensor (Bank 2)	
L 1	License Plate Light	90980–11159

L PART NUMBER OF CONNECTORS

Code	Part Name	Part Number
L 2	Luggage Compartment Light	90980–11148
L 3	Luggage Compartment Door Opener Motor	90980–10825
	Luggage Compartment Light SW	
M 1	Mass Air Flow Meter	90980–11317
M 2	Mirror Heater LH	90980–11923
	Remote Control Mirror LH	
M 3	Mirror Heater RH	
	Remote Control Mirror RH	
M 4	Moon Roof Control ECU and Motor	90980–10801
N 1	Noise Filter (Ignition)	90980–10843
N 2	Noise Filter (Rear Window Defogger)	90980–10928
N 4	Noise Filter (Rear Window Defogger)	90980–10916
N 5	Noise Filter (Stop Light and Luggage Compartment Light)	90980–10860
N 7	Noise Filter (Rear Window Defogger)	90980–10916
O 1	Oil Pressure SW	90980–11363
O 2	Occupant Classification ECU	90980–12356
O 3	Occupant Classification ECU	90980–12357
O 4	Occupant Classification Sensor Front LH	90980–12353
O 5	Occupant Classification Sensor Front RH	90980–12354
O 6	Occupant Classification Sensor Rear LH	
O 7	Occupant Classification Sensor Rear RH	90980–12353
P 1	Power Steering Oil Pressure SW	90980–11428
P 2	Pressure SW	90980–10943
P 3	Parking Brake SW	90980–10871
P 4	Power Outlet (Front)	90980–10760
P 5	Power Outlet (Rear)	90980–10860
P 6	Pressure SW	90980–10906
P 7	Power Window Motor Front LH	90980–10797
P 8	Power Window Motor Front RH	
P 9	Power Window SW Front RH	90980–10789
P10	Pretensioner LH	90980–12253
P11	Pretensioner RH	
P12	Power Seat Control SW (Driver's Seat Lumbar Support Control)	90980–10789
P13	Power Seat Control SW (Driver's Seat)	90980–10997
P14	Power Seat Motor (Driver's Seat Front Vertical Control)	90980–10825
P15	Power Seat Motor (Driver's Seat Lifter Control)	
P16	Power Seat Motor (Driver's Seat Lumbar Support Control)	
P17	Power Seat Motor (Driver's Seat Reclining Control)	
P18	Power Seat Motor (Driver's Seat Slide Control)	
P19	Power Window SW (All Window)	90980–10996
P20	Personal Light	90980–11187

Code	Part Name	Part Number
Q 1	Quarter Power Window Motor LH	90980–10797
Q 2	Quarter Power Window Motor RH	
R 1	Radiator Fan Motor	90980–10928
R 2	Radio and Player	90980–12259
R 3	Radio and Player	90980–10997
R 4	Radio and Player	90980–10996
R 5	Radio and Player with Display	90980–11909
R 6	Radio and Player (w/o Navigation System)	90980–12259
	Radio and Player with Display (w/ Navigation System)	
R 7	Radio and Player (w/o Navigation System)	90980–12038
	Radio and Player with Display (w/ Navigation System)	
R 8	Remote Control Mirror SW	90980–11657
R 9	Rear Combination Light LH	90980–10797
R10	Rear Combination Light RH	
R11	Rear Speaker LH (C/P)	90980–11299
	Rear Speaker LH (Convertible)	90980–10935
R12	Rear Speaker RH (C/P)	90980–11299
	Rear Speaker RH (Convertible)	90980–10935
R13	Rear Window Defogger	90980–10914
R14	Rear Window Defogger	90980–10913
R15	Rear Window Defogger	90980–10927
S 1	Skid Control ECU with Actuator	90980–12297
S 2	Skid Control ECU with Actuator	90080–98317
S 3	Starter	90980–11400
S 4	Starter	90980–09463
S 5	Seat Heater SW (Driver's Seat)	90980–10964
S 6	Seat Heater SW (Front Passenger's Seat)	90980–10933
S 7	Security Indicator	90980–12063
S 8	Shift Lock Control ECU	90980–12552
	Transmission Control SW	
S 9	Steering Sensor	90980–12155
S10	Stereo Component Amplifier	90980–10821
S11	Stereo Component Amplifier	90980–12200
S12	Stop Light SW	90980–11118
S13	Seat Heater (Front Passenger's Seat)	90980–10935
S14	Side Airbag Squib LH	90980–11864
S15	Side Airbag Squib RH	
S16	Seat Heater (Driver's Seat)	90980–10935
S17	Sliding Roof Control SW	90980–10797
T 1	Theft Deterrent Horn	90980–10619
T 2	Throttle Control Motor	90980–11858
	Throttle Position Sensor	
T 3	Turbine Speed Sensor	90980–11156
T 4	TRAC Off SW	90980–10933

Note: Not all of the above part numbers of the connector are established for the supply.

Code	Part Name	Part Number
T 5	Transponder Key Computer	90980–11911
T 6	Turn Signal Flasher Relay	90980–10799
T 7	Tweeter LH	90980–11013
T 8	Tweeter RH	
U 1	Unlock Warning SW	90980–10795
U 2	Upper Console Panel Sub–Assembly	90980–11918
V 2	VSV (ACIS)	90980–11149
V 3	VSV (ACM)	90980–11156
V 4	VSV (AICV)	
V 5	VSV (EVAP)	
V 6	VVT Sensor LH	90980–10947
V 7	VVT Sensor RH	
V 8	VVT Solenoid	90980–11162
V 9	VVT Solenoid LH	
V10	VVT Solenoid RH	

Code	Part Name	Part Number
V11	VSC Buzzer	90980–10906
V12	Vanity Light LH	90980–10621
V13	Vanity Light RH	
V14	Vapor Pressure Sensor	90980–11860
V15	VSV (Canister Closed Valve)	90980–11859
W 1	Washer Level Sensor	90980–11068
W 2	Washer Motor	90980–10981
W 3	Water Temp. SW No.1	90980–11235
W 4	Water Temp. SW No.2	90980–11243
W 5	Woofer	90980–10795
Y 1	Yaw Rate Sensor	90980–11904
Z 1	Option Connector (TVIP ECU)	90980–10871
Z 2	Option Connector (TVIP Glass Breakage Sensor ECU)	

1 CAMRY SOLARA

(Cont. next page)

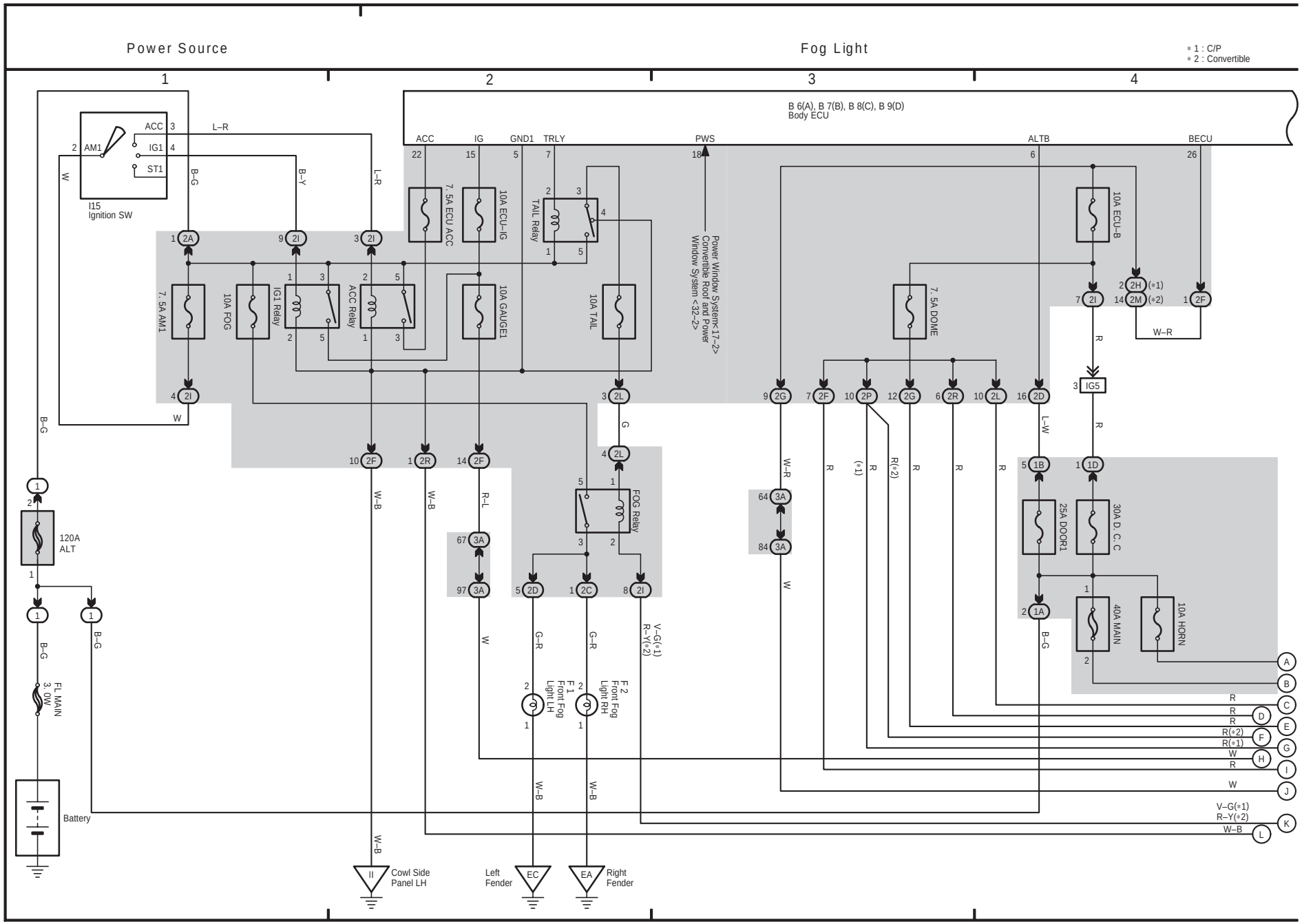

(Cont. next page)

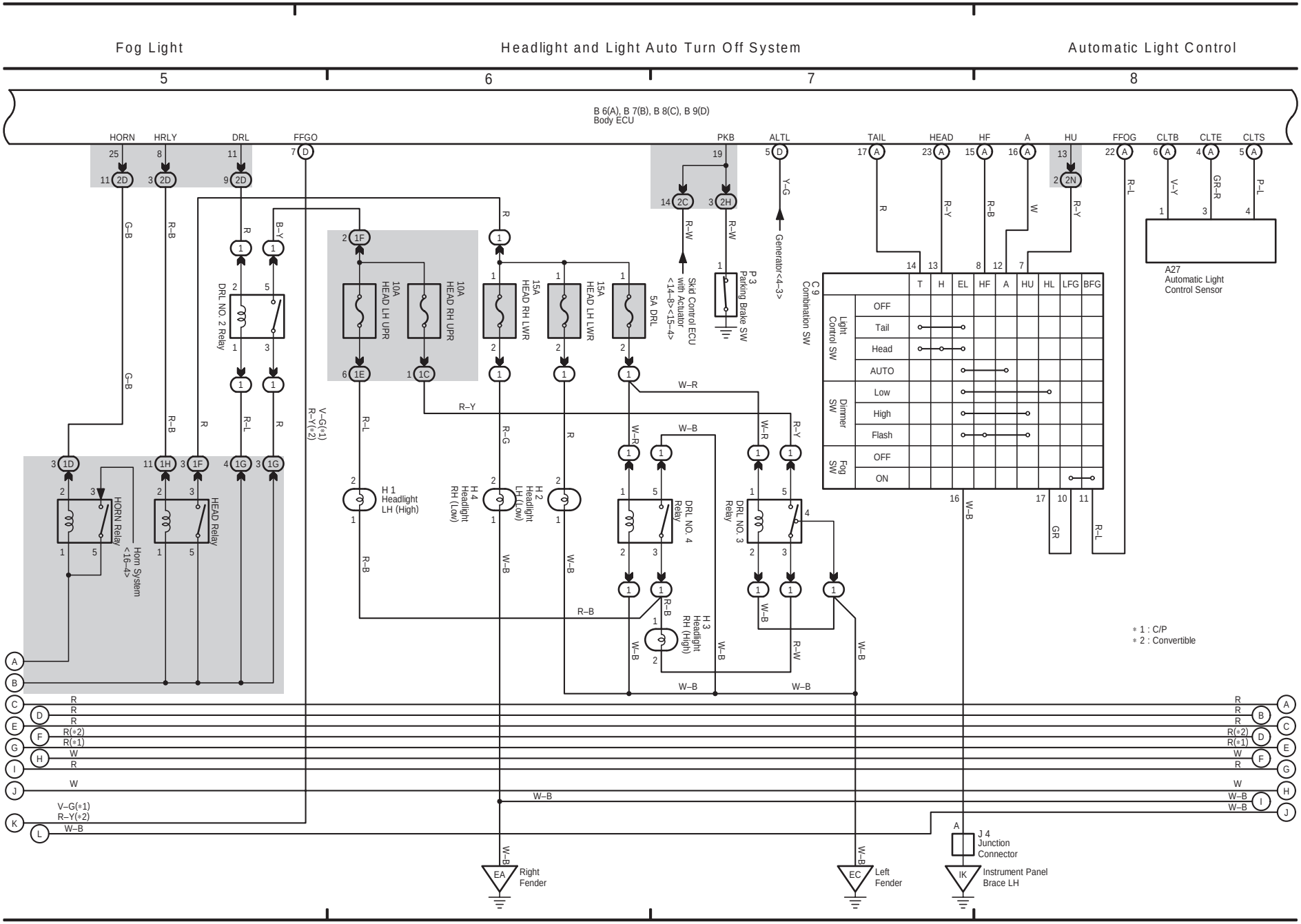

1 CAMRY SOLARA (Cont' d)

(Cont. next page)

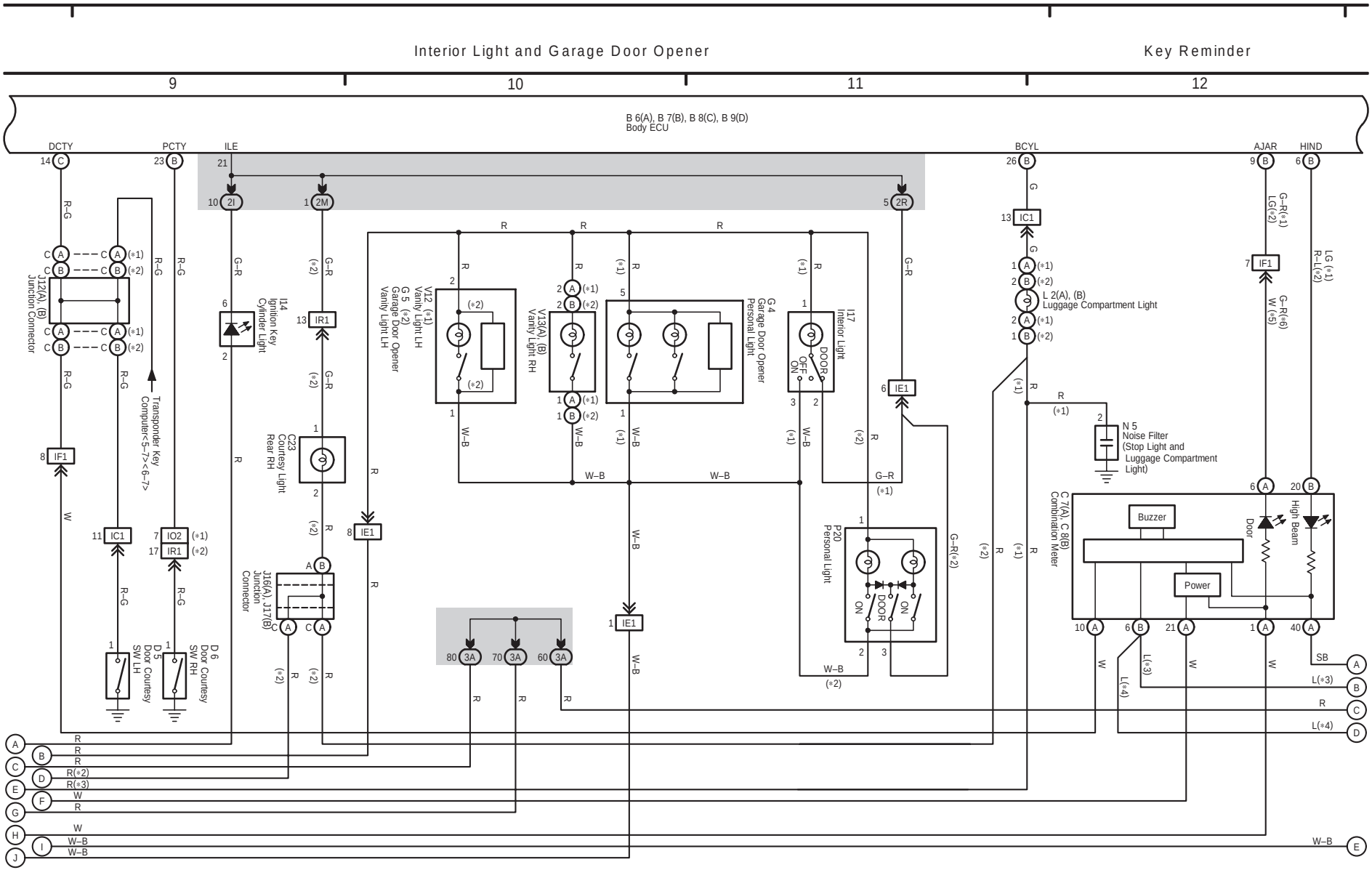

* 1 : C/P
* 2 : Convertible
* 3 : 3MZ–FE
* 4 : 2AZ–FE
* 5 : C/P, Convertible w/ VSC
* 6 : Convertible w/o VSC

(Cont. next page)

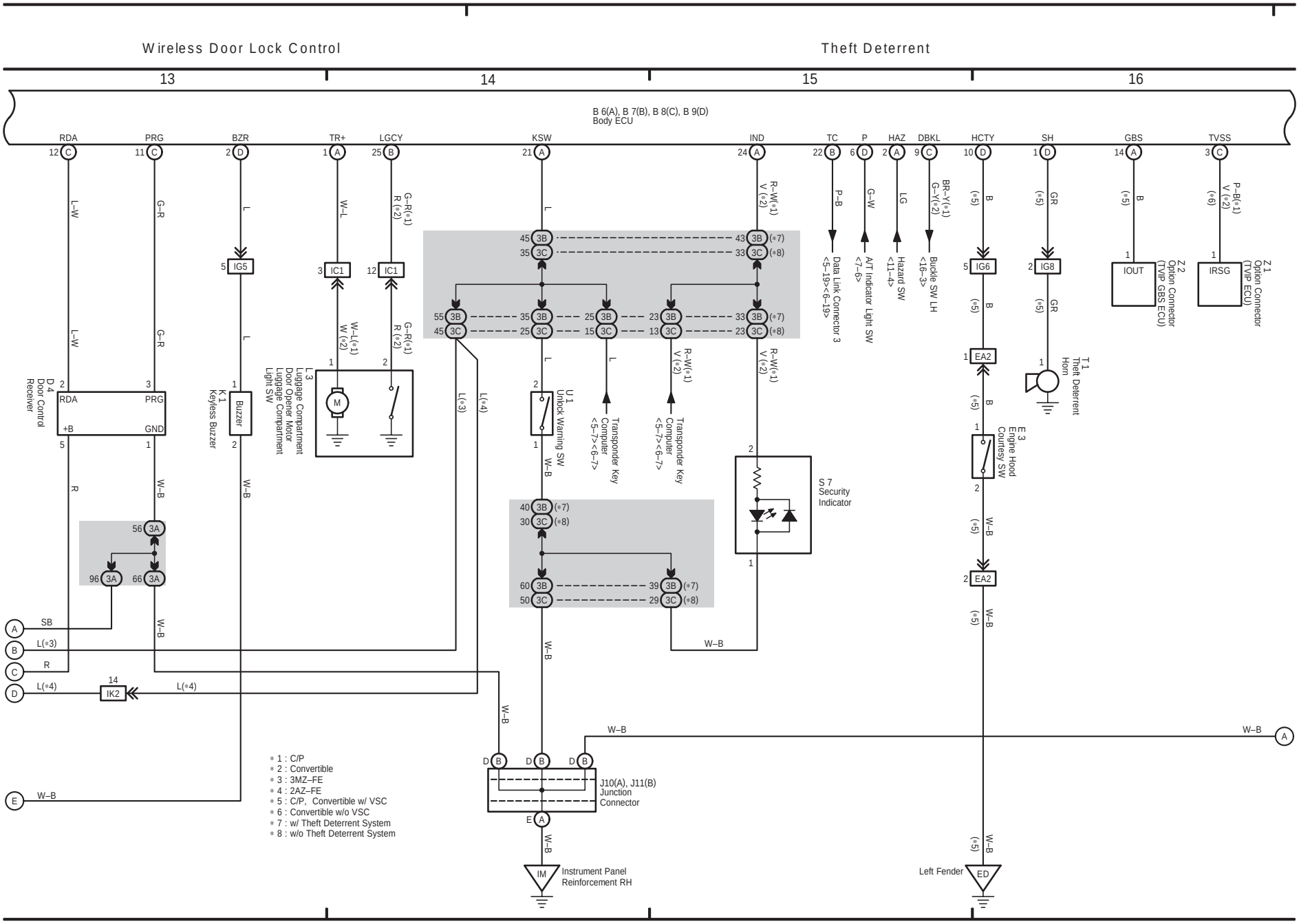

1 CAMRY SOLARA (Cont' d)

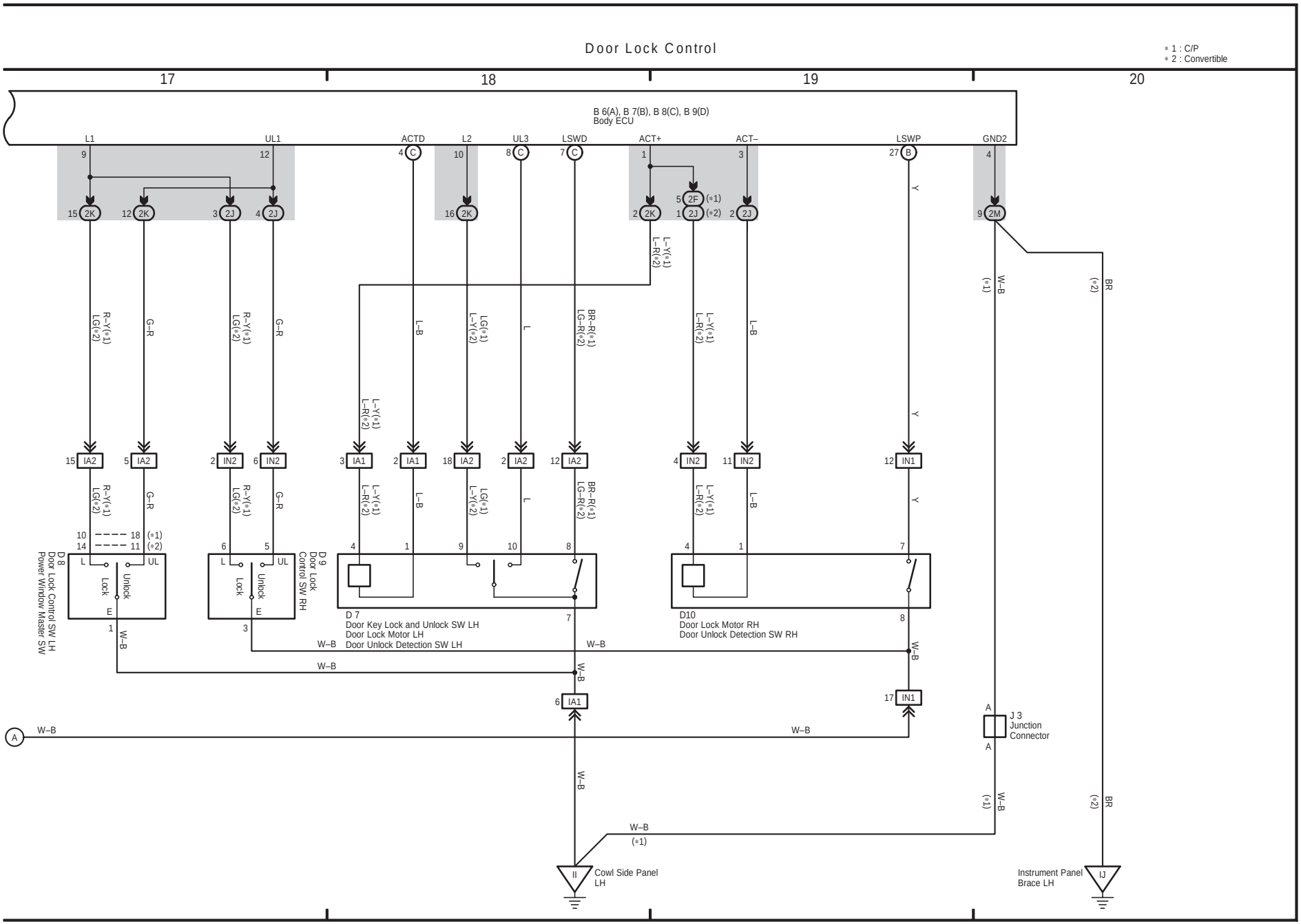

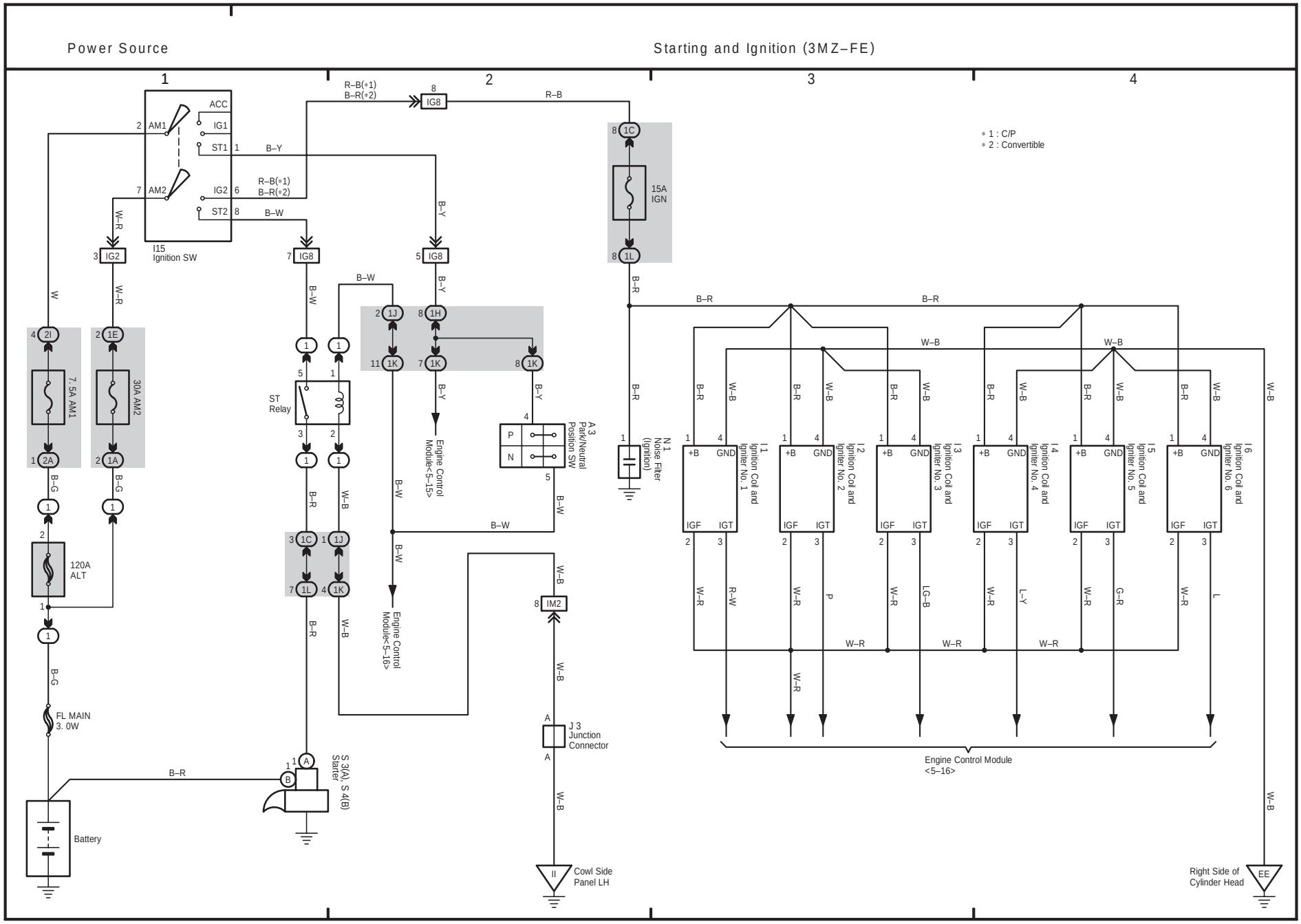
Power Source
Starting and Ignition (3MZ–FE)
1
2
3
4
ACC
IG1
ST1
AM1
AM2
IG2
ST2
I15
Ignition SW
R–B(*1)
B–R(*2)
B–Y
B–W
W–R
W
IG8
IG2
15A
IGN
7. 5A AM1
30A AM2
120A
ALT
B–G
FL MAIN
3. 0W
Battery
ST
Relay
Engine Control
Module<5–15>
Engine Control
Module<5–16>
A 3
Park/Neutral
Position SW
P
N
IM2
J 3
Junction
Connector
Cowl Side
Panel LH
S 3(A), S 4(B)
Starter
N 1
Noise Filter
(Ignition)
I1
Ignition Coil and
Igniter No. 1
I2
Ignition Coil and
Igniter No. 2
I3
Ignition Coil and
Igniter No. 3
I4
Ignition Coil and
Igniter No. 4
I5
Ignition Coil and
Igniter No. 5
I6
Ignition Coil and
Igniter No. 6
+B
GND
IGF
IGT
R–W
P
LG–B
L–Y
G–R
L
Engine Control Module
<5–16>
Right Side of
Cylinder Head
EE
* 1 : C/P
* 2 : Convertible

3 CAMRY SOLARA

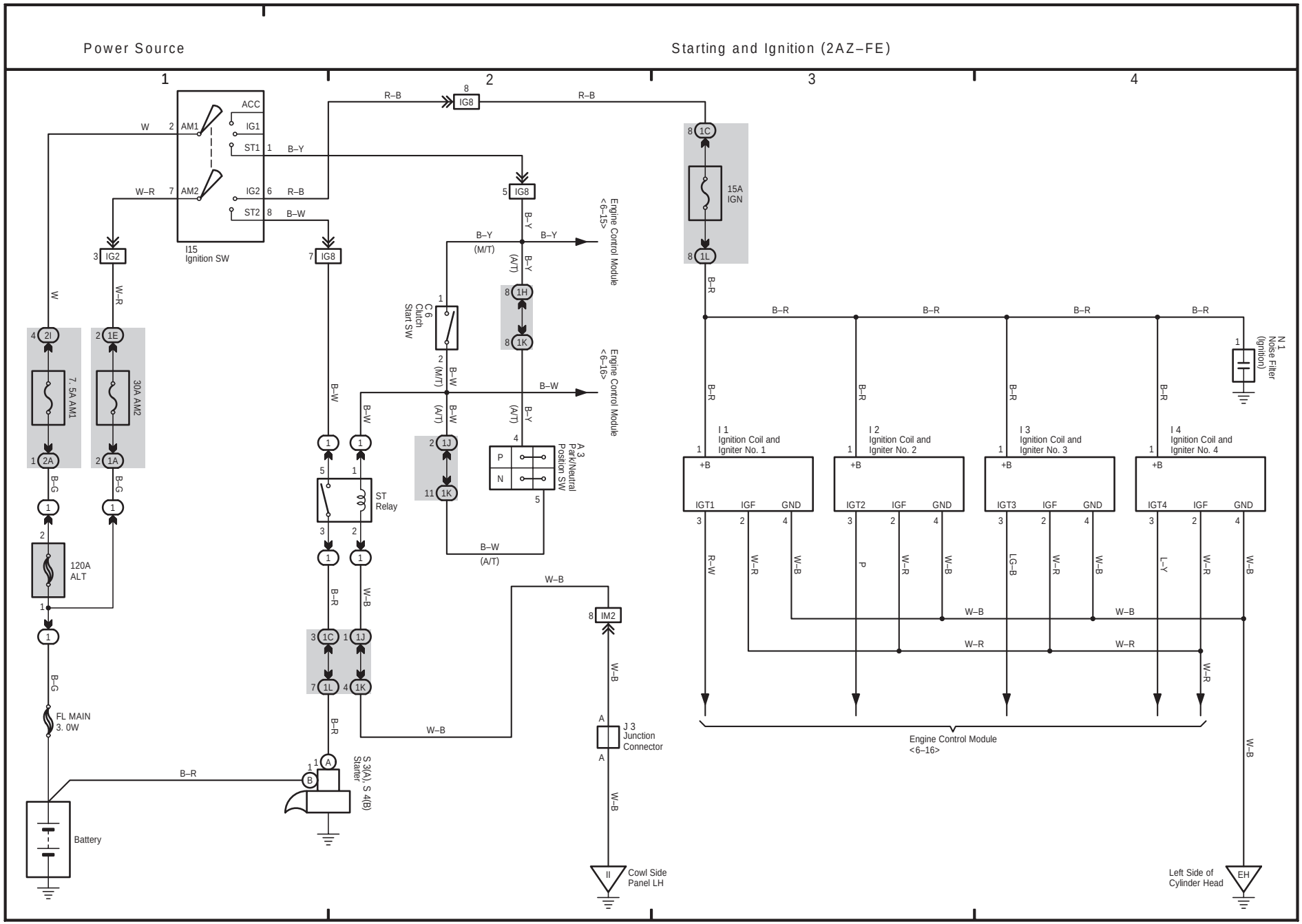

4 CAMRY SOLARA

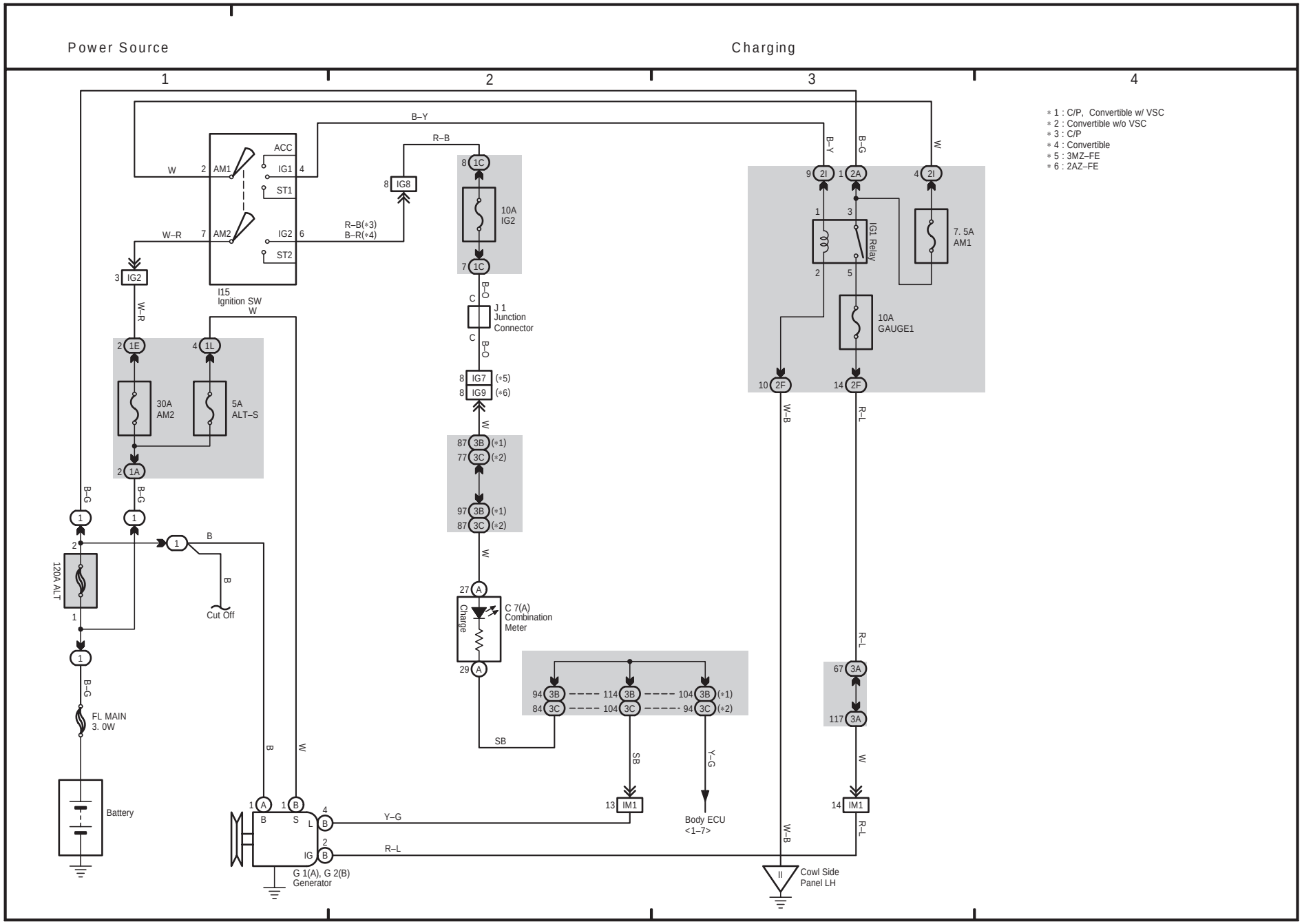

5 CAMRY SOLARA

(Cont. next page)

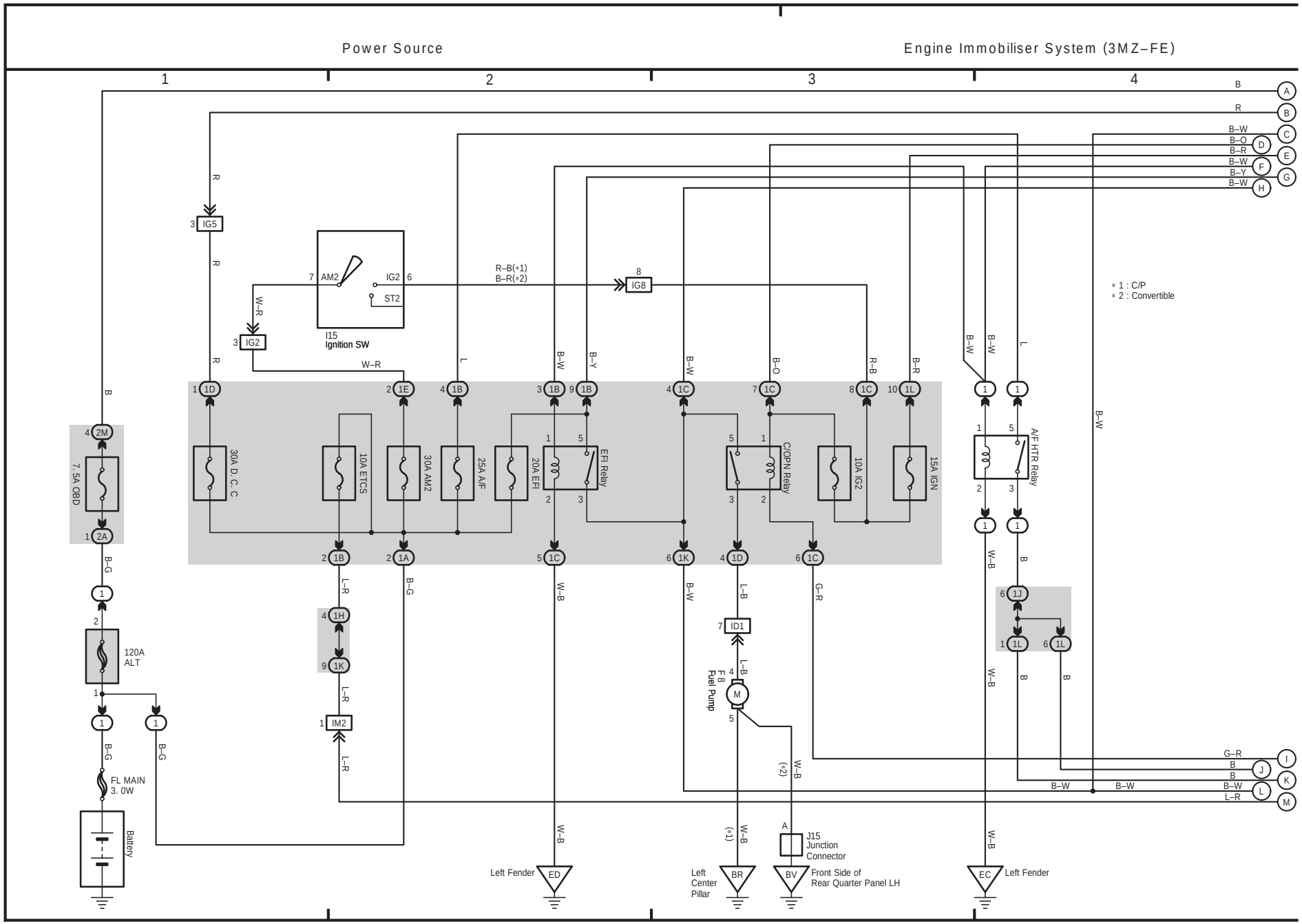

(Cont. next page)

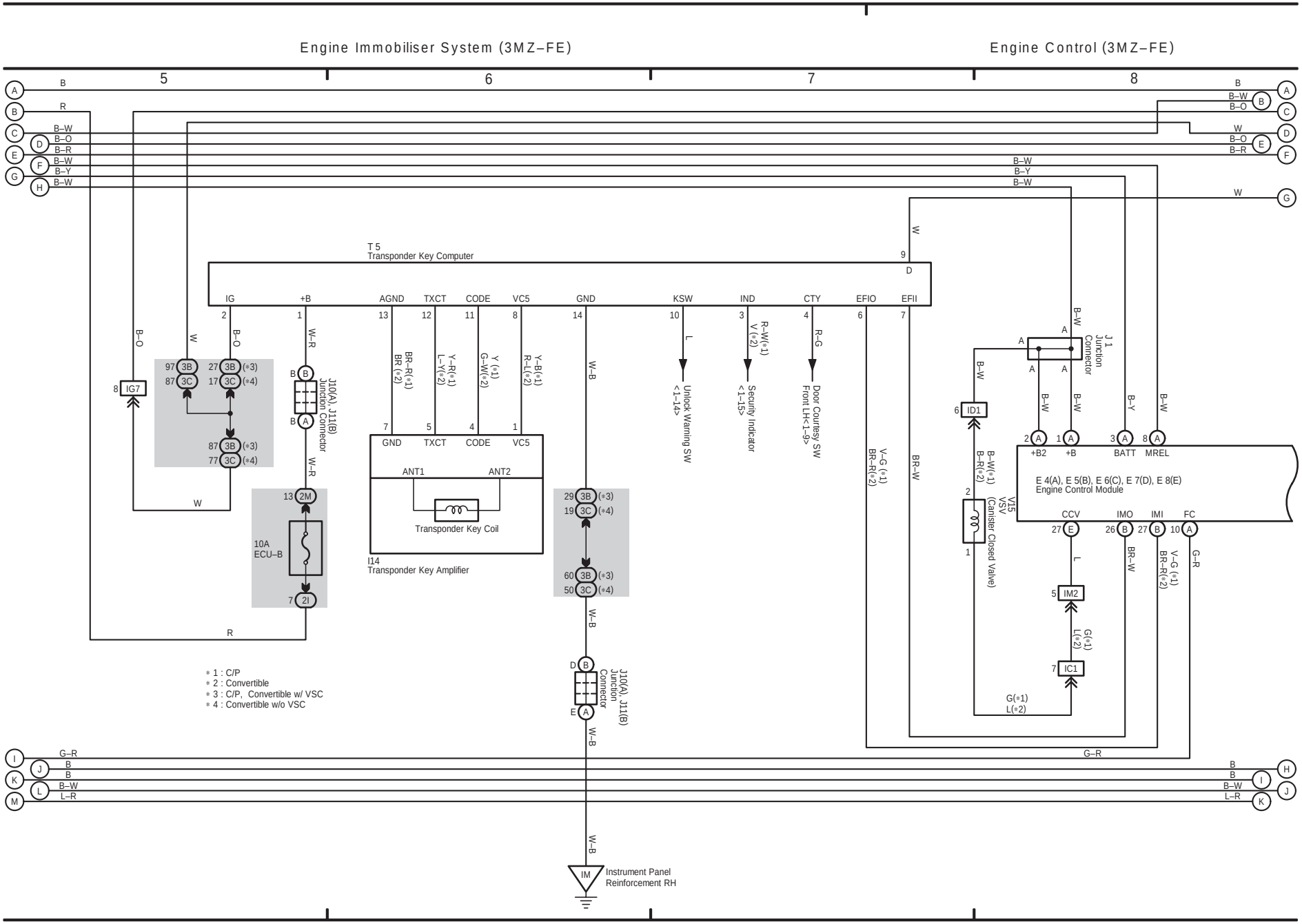

5 CAMRY SOLARA (Cont' d)

(Cont. next page)

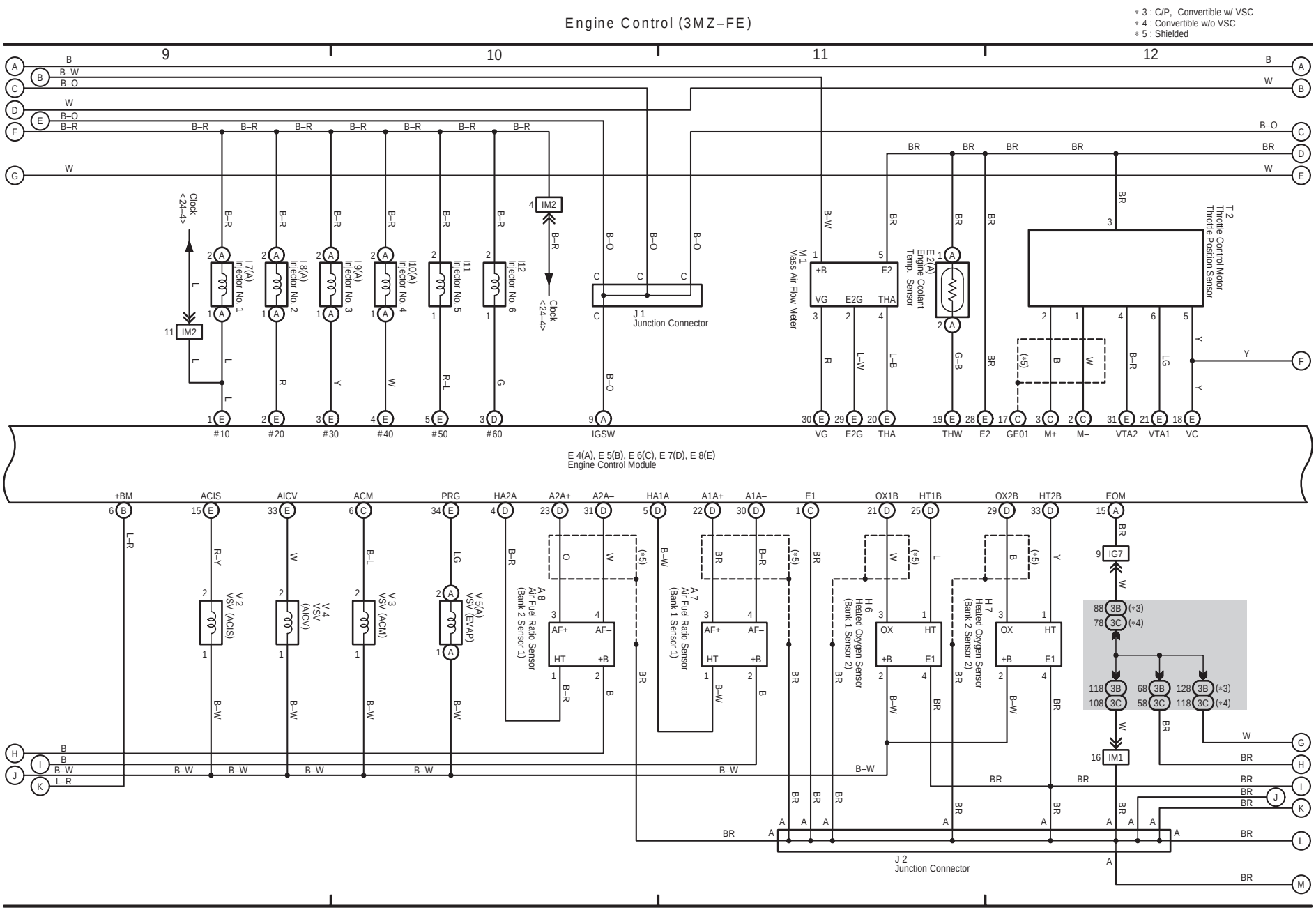

(Cont. next page)

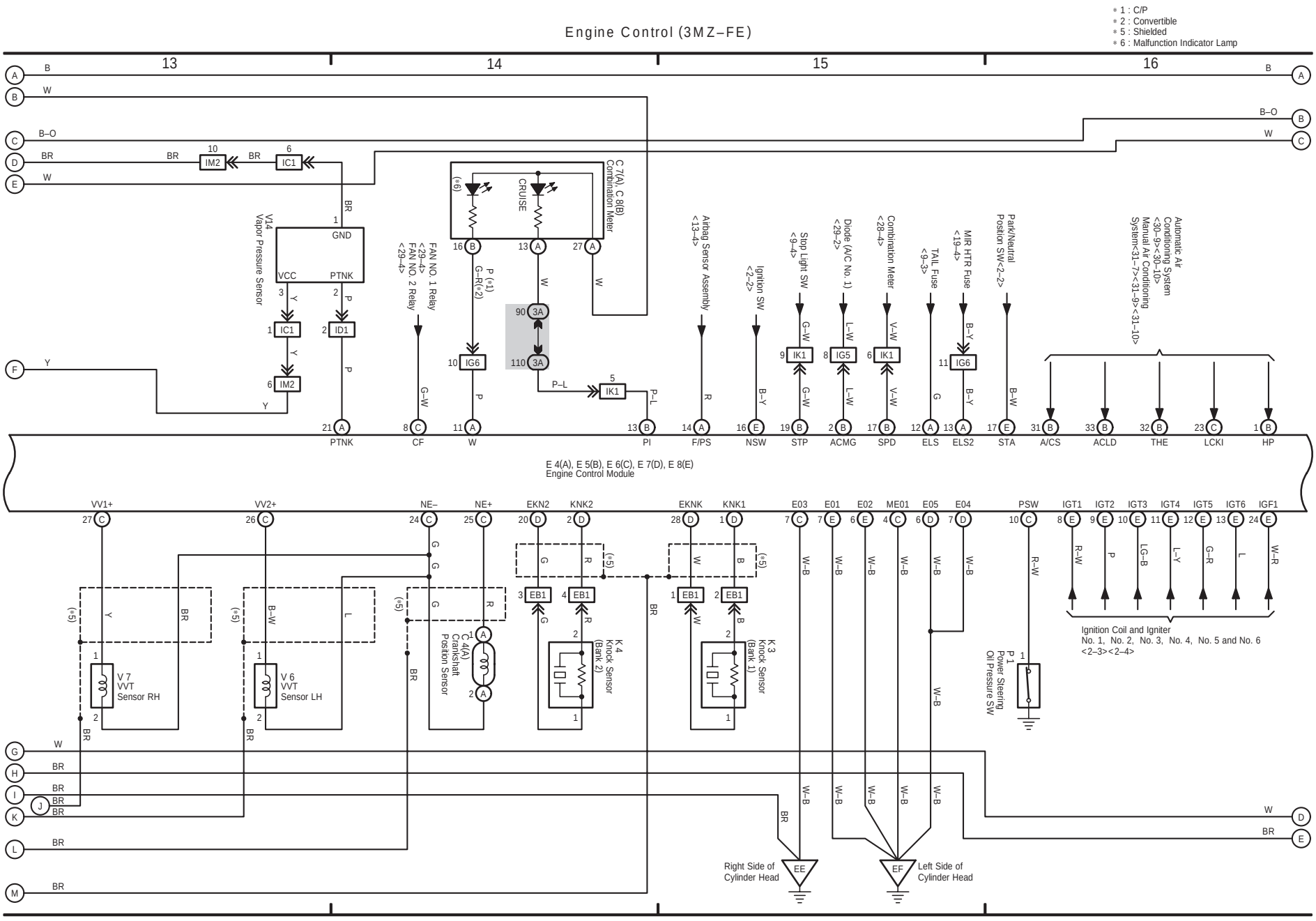

5 CAMRY SOLARA (Cont' d)

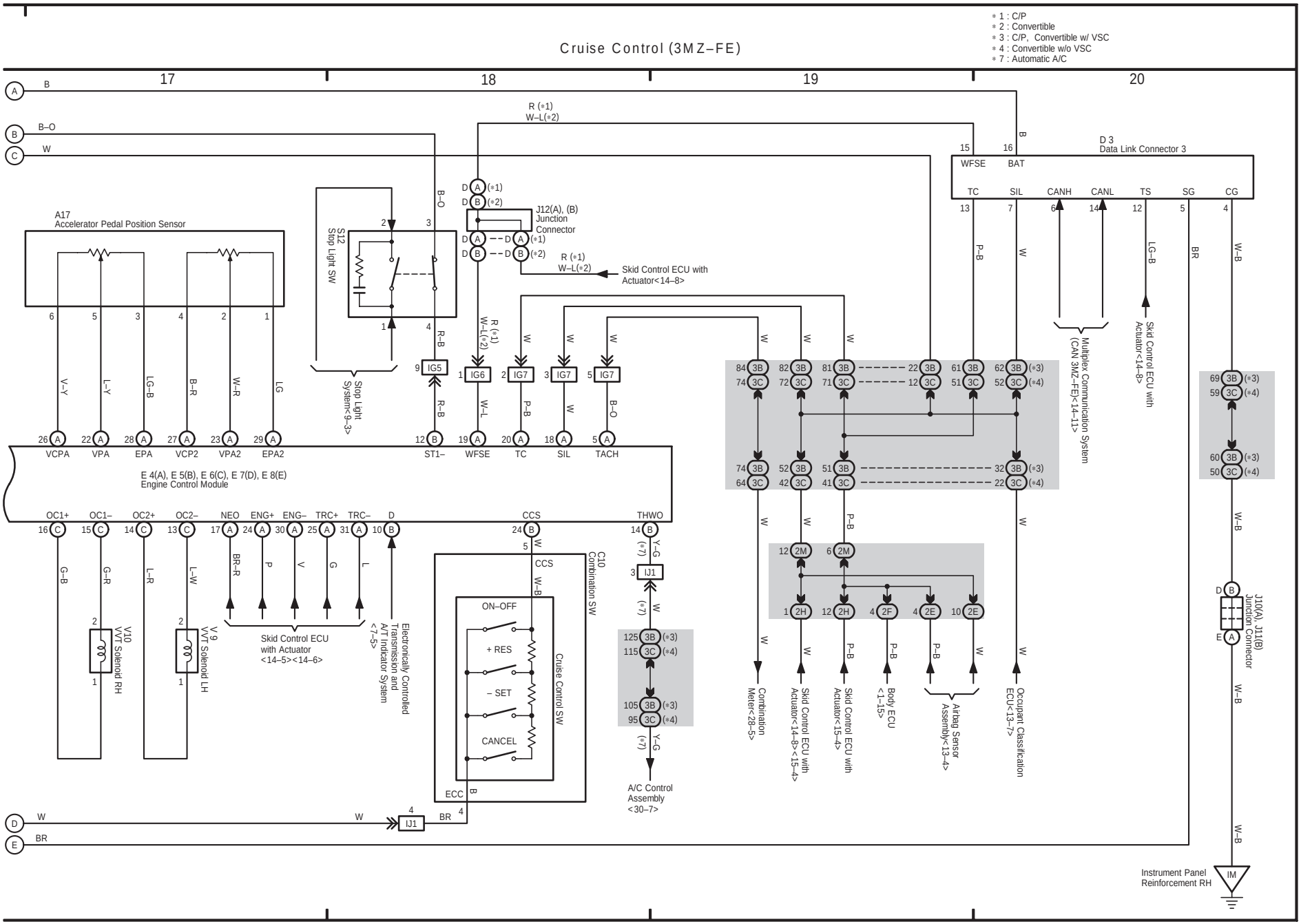

6 CAMRY SOLARA

(Cont. next page)

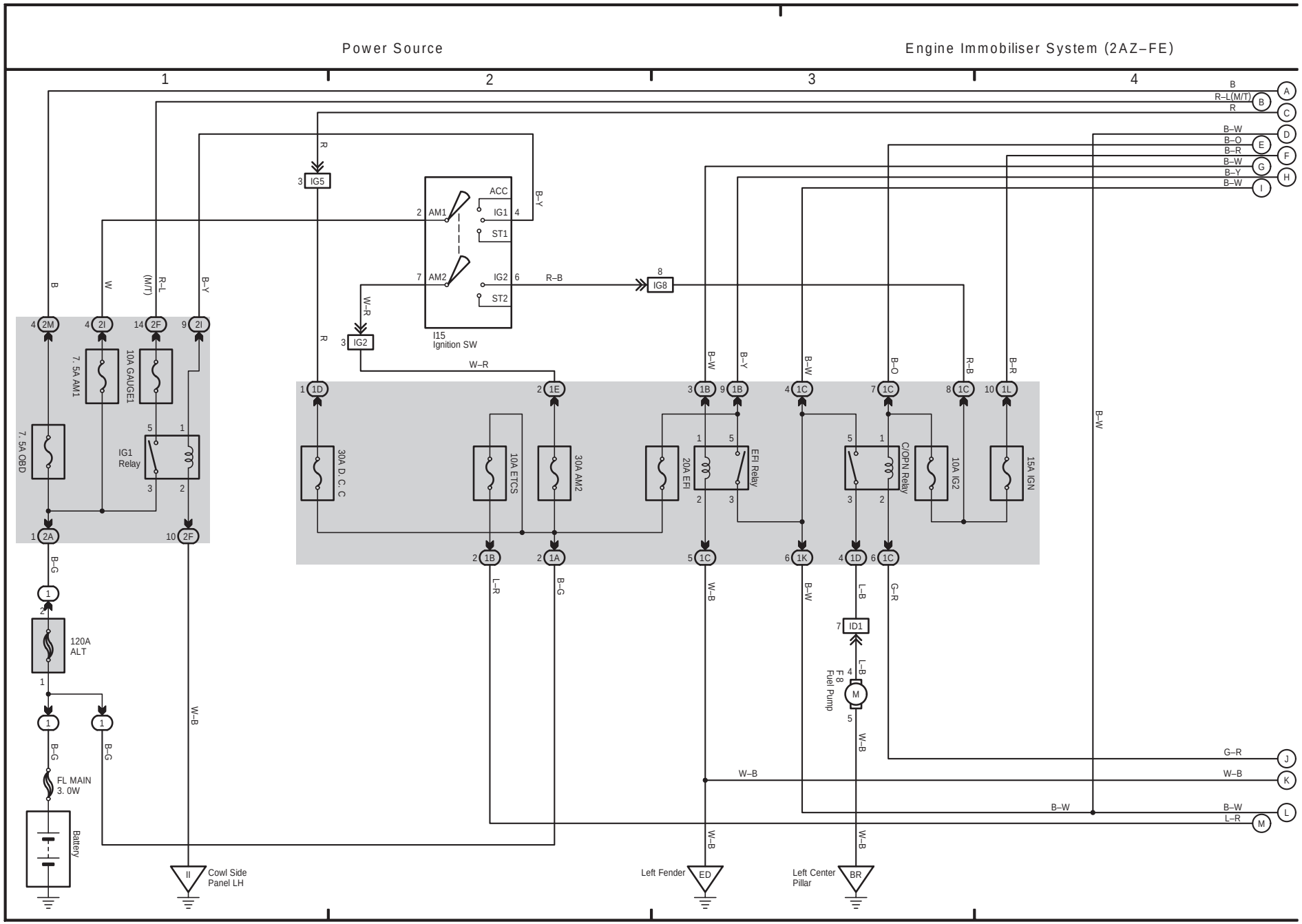

(Cont. next page)

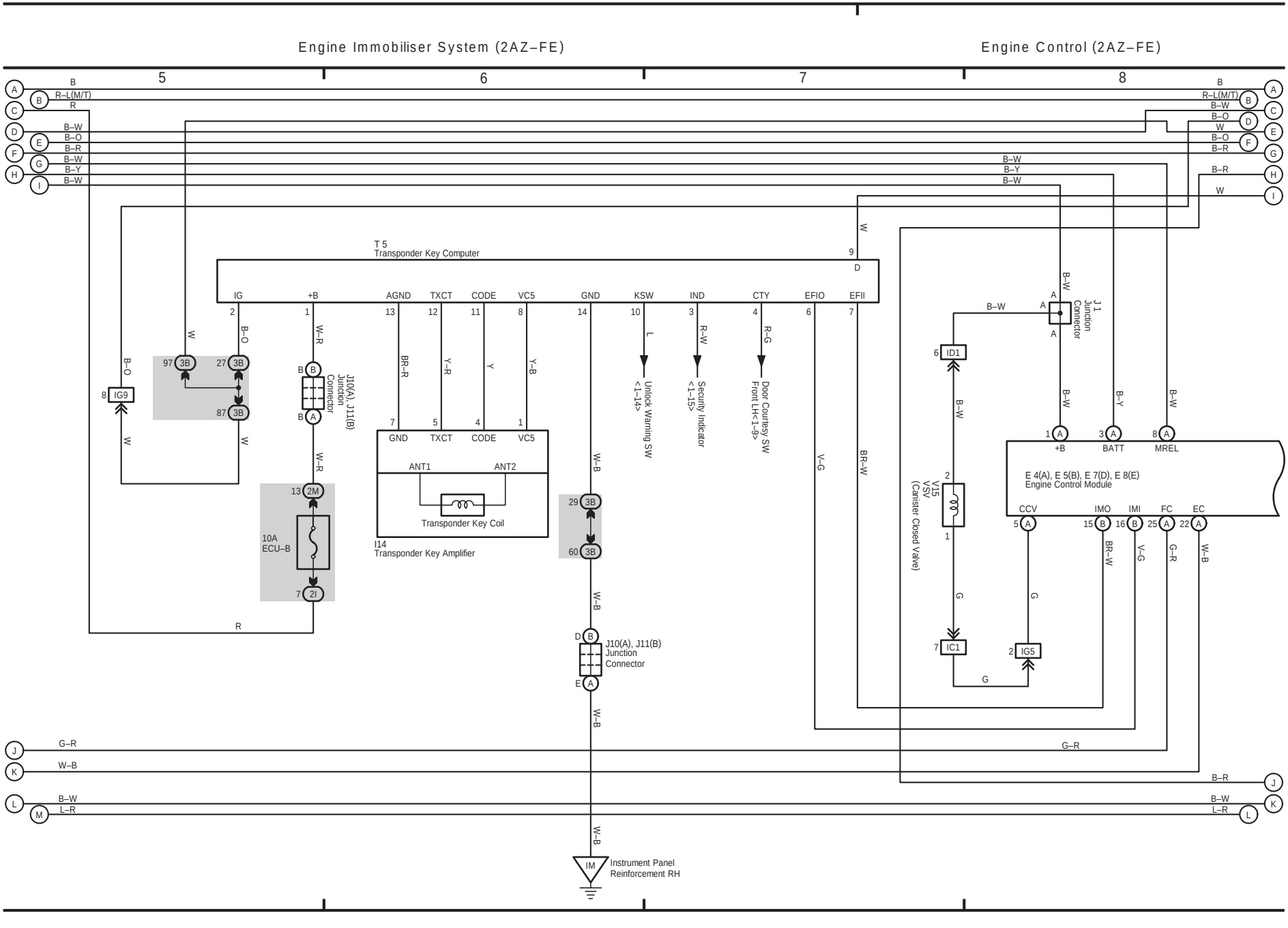

6 CAMRY SOLARA (Cont' d)

(Cont. next page)

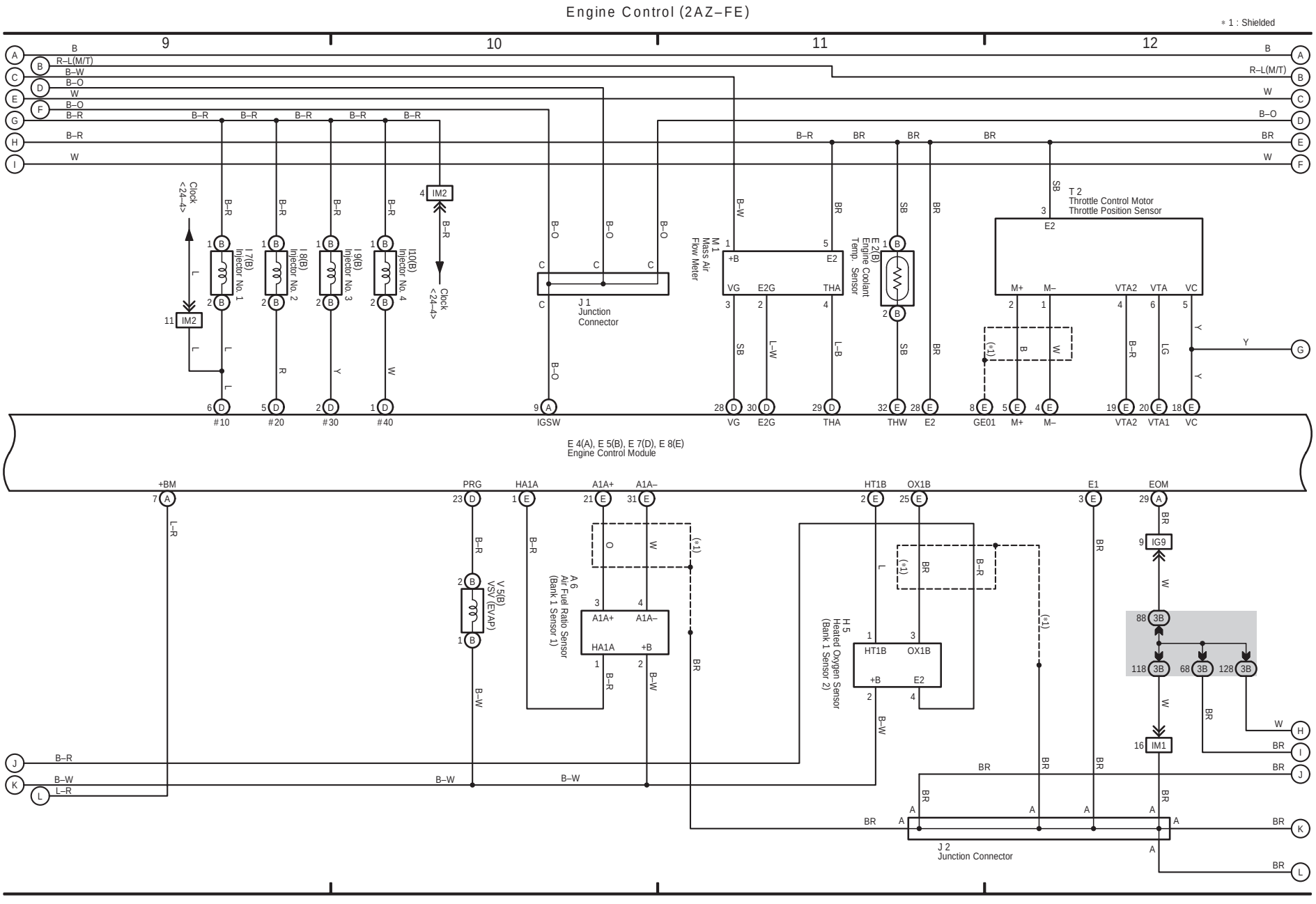

(Cont. next page)

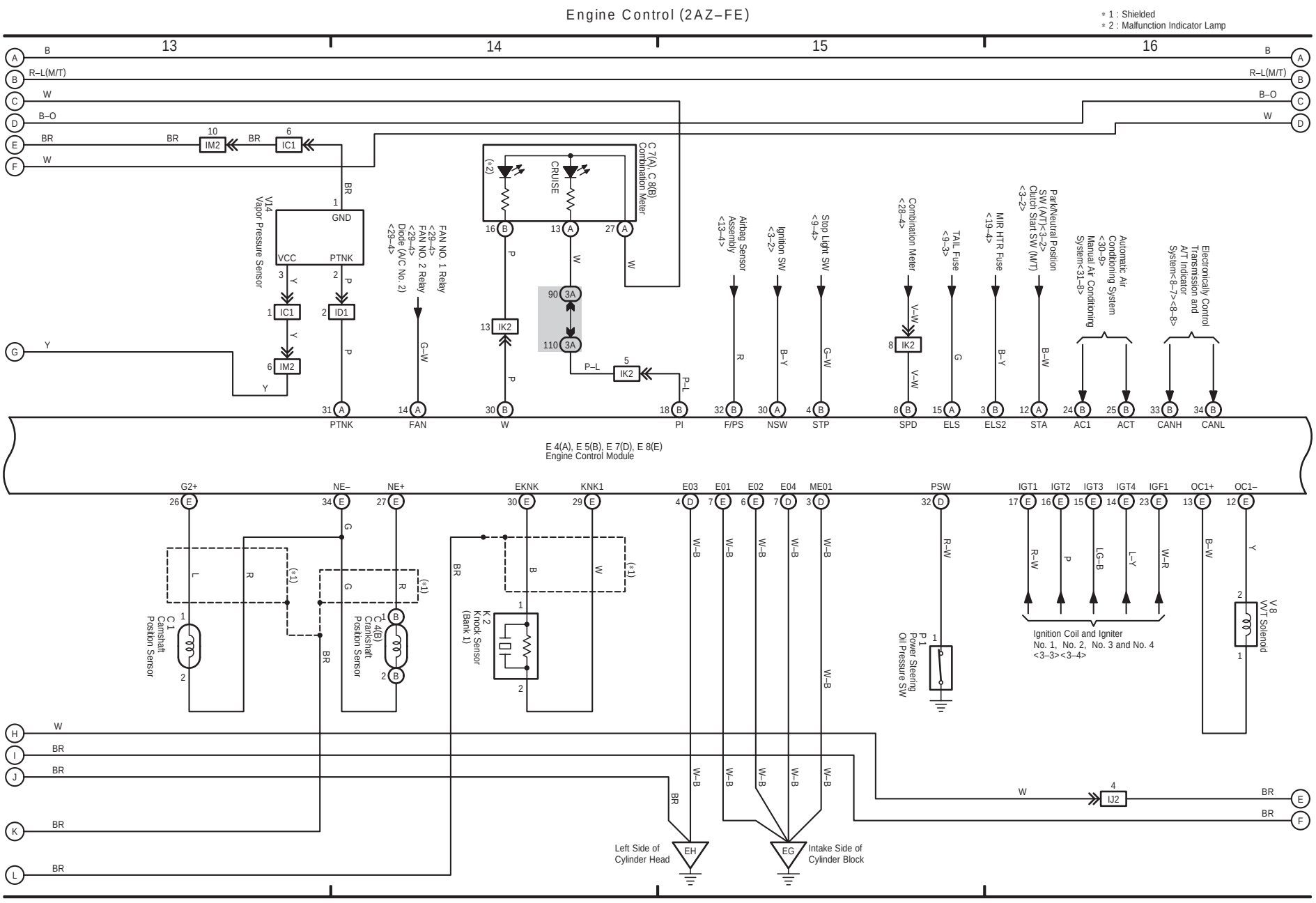

6 CAMRY SOLARA (Cont' d)

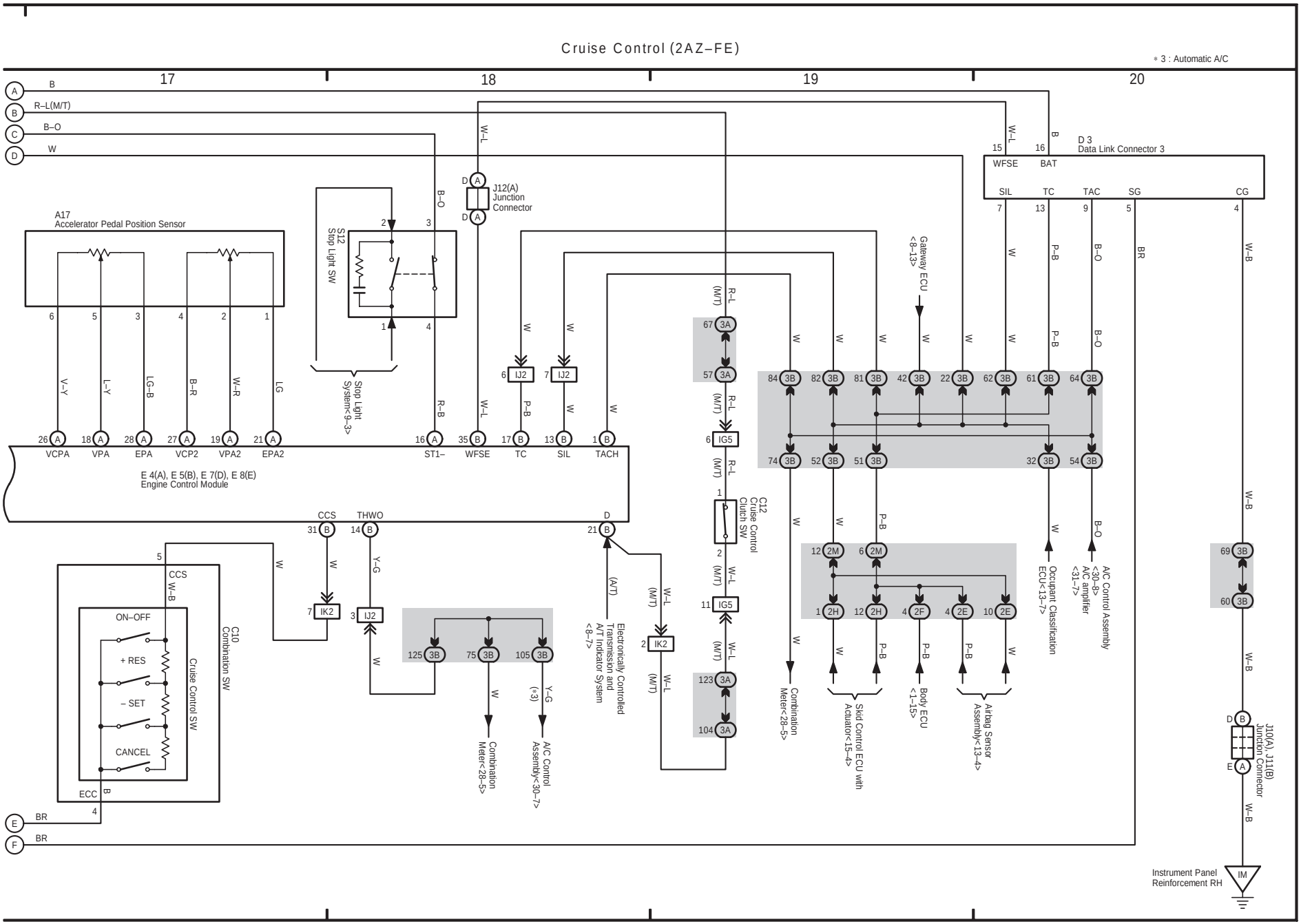

7 CAMRY SOLARA

(Cont. next page)

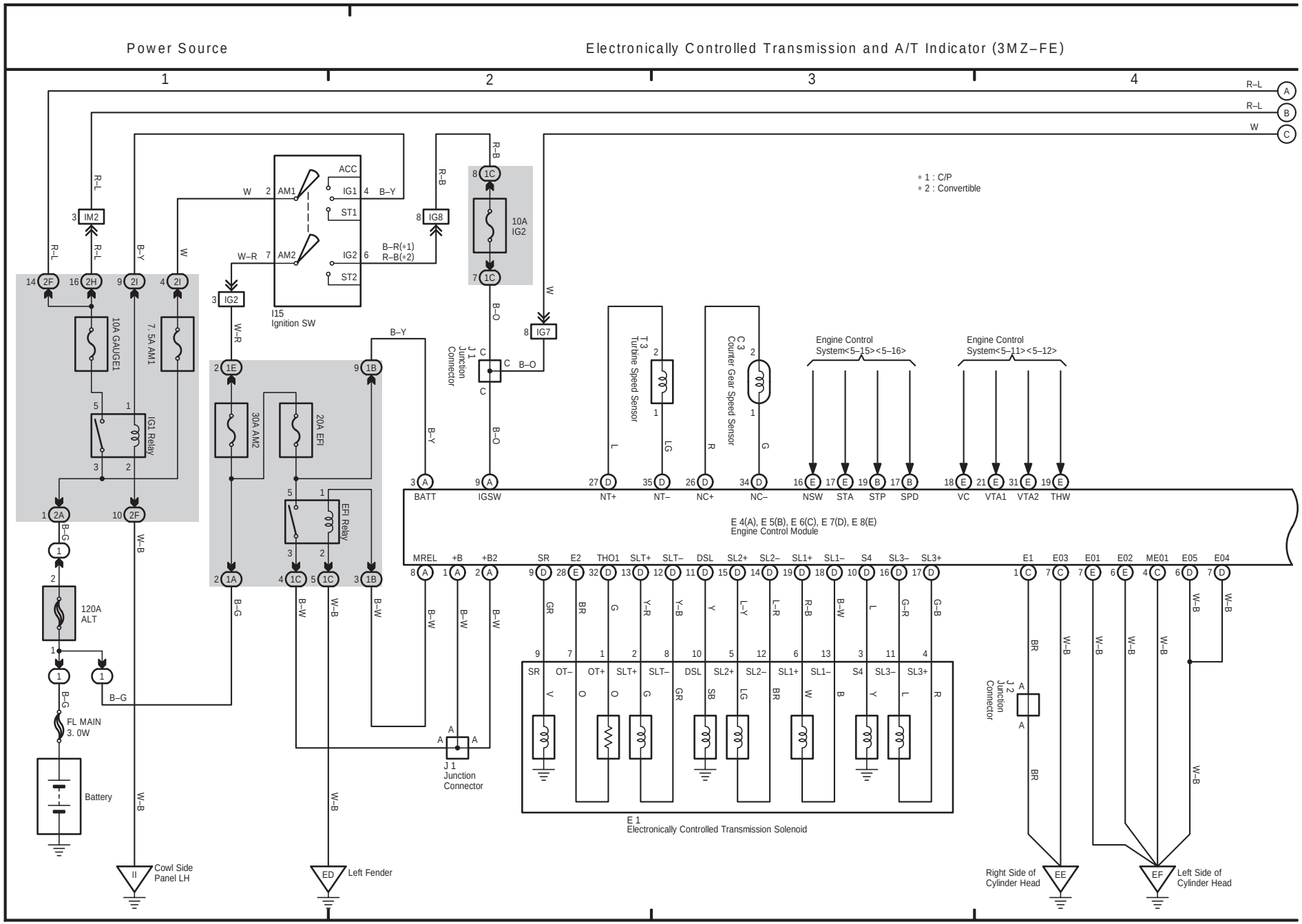

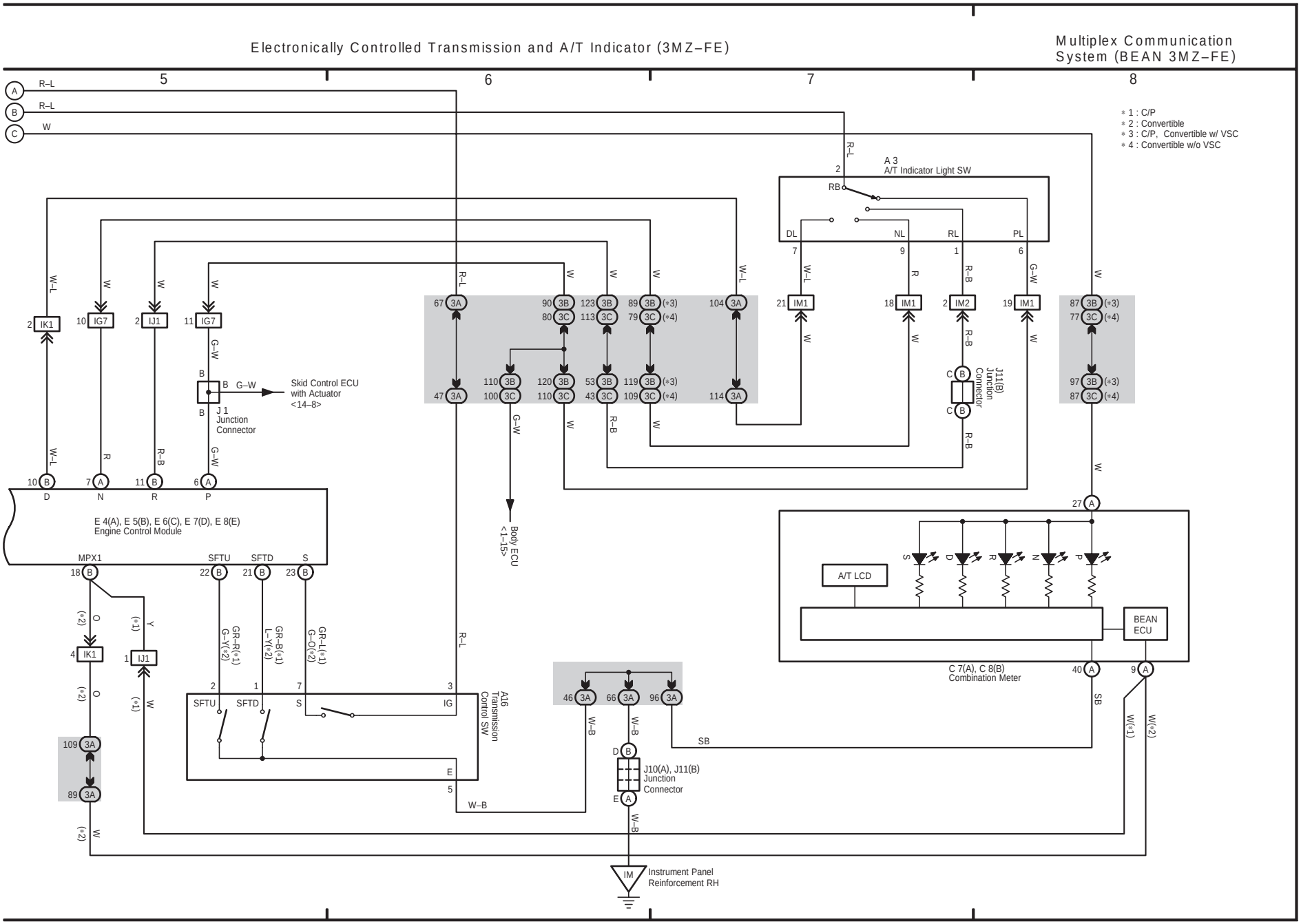
Electronically Controlled Transmission and A/T Indicator (3MZ–FE)
Multiplex Communication System (BEAN 3MZ–FE)
5
6
7
8
R–L
R–L
W
* 1 : C/P
* 2 : Convertible
* 3 : C/P, Convertible w/ VSC
* 4 : Convertible w/o VSC
A 3
A/T Indicator Light SW
RB
DL
NL
RL
PL
IK1
IG7
IJ1
IG7
IM1
IM1
IM2
IM1
J 1
Junction
Connector
Skid Control ECU
with Actuator
<14–8>
J11(B)
Junction
Connector
E 4(A), E 5(B), E 6(C), E 7(D), E 8(E)
Engine Control Module
MPX1
SFTU
SFTD
S
Body ECU
<1–15>
A/T LCD
BEAN
ECU
C 7(A), C 8(B)
Combination Meter
A16
Transmission
Control SW
SFTU
SFTD
S
IG
J10(A), J11(B)
Junction
Connector
IK1
IJ1
W–B
SB
IM
Instrument Panel
Reinforcement RH

8 CAMRY SOLARA

(Cont. next page)

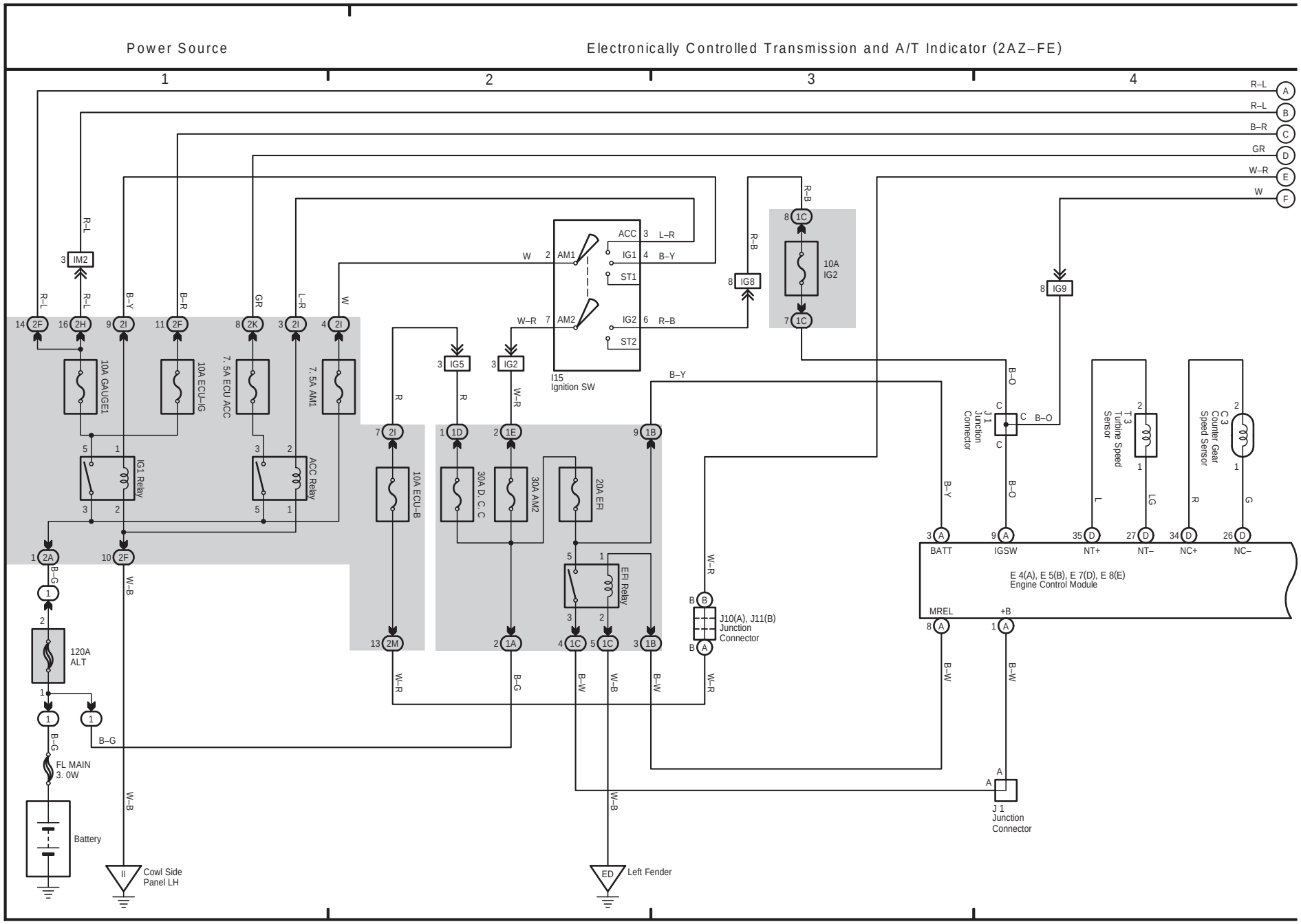

(Cont. next page)

Electronically Controlled Transmission and A/T Indicator (2AZ–FE)

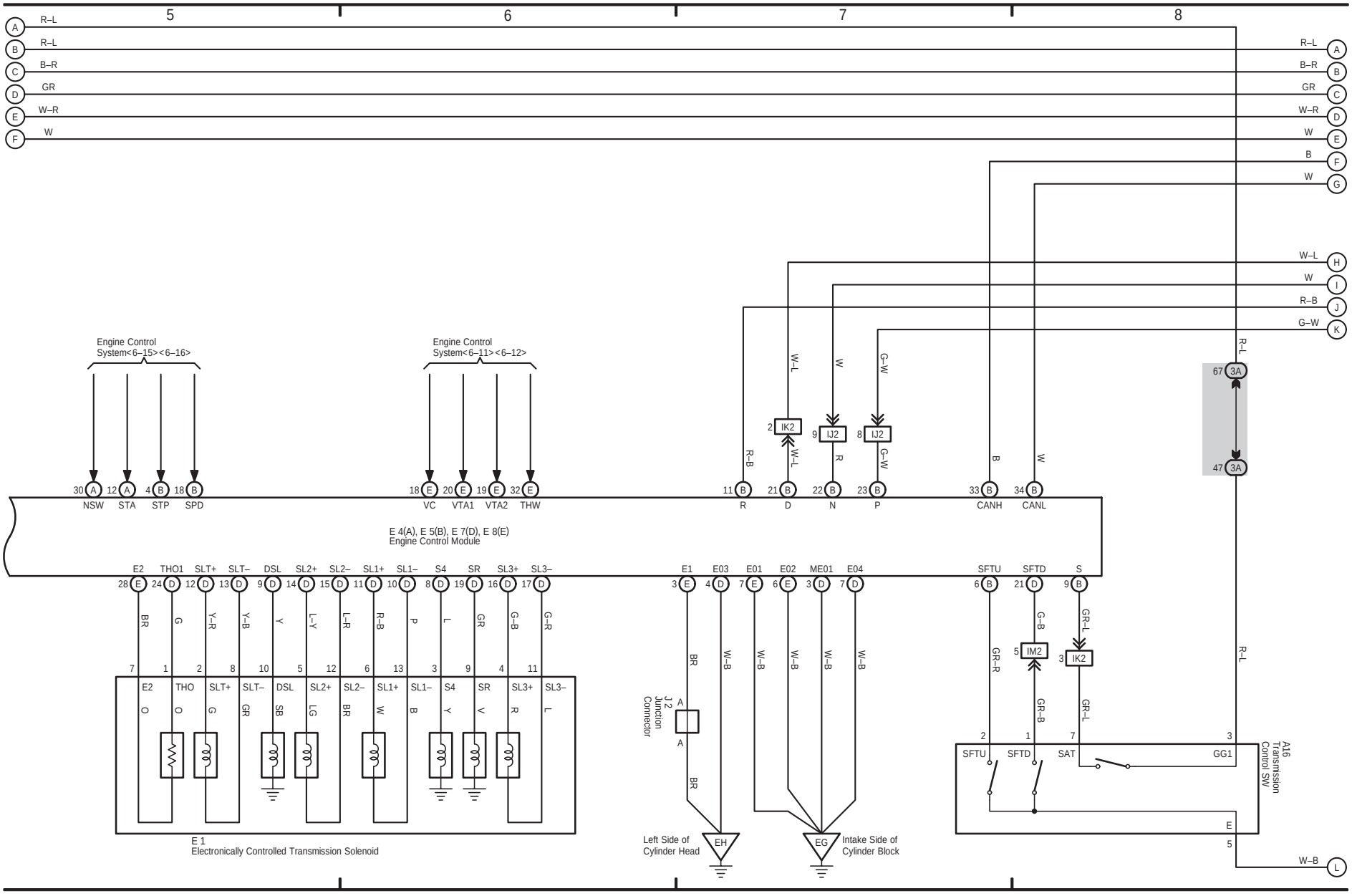

8 CAMRY SOLARA (Cont' d)

(Cont. next page)

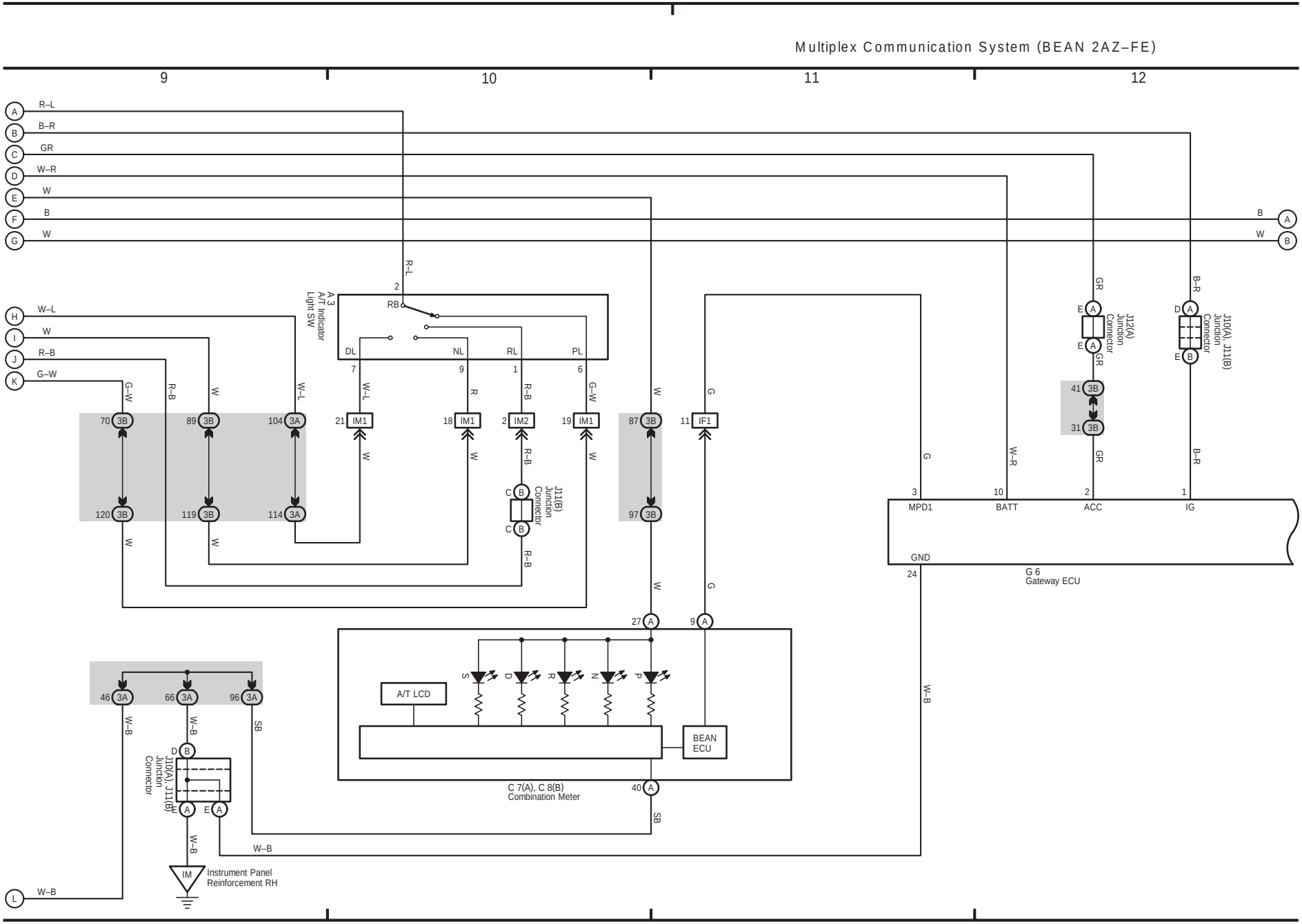

Multiplex Communication System (CAN 2AZ–FE)

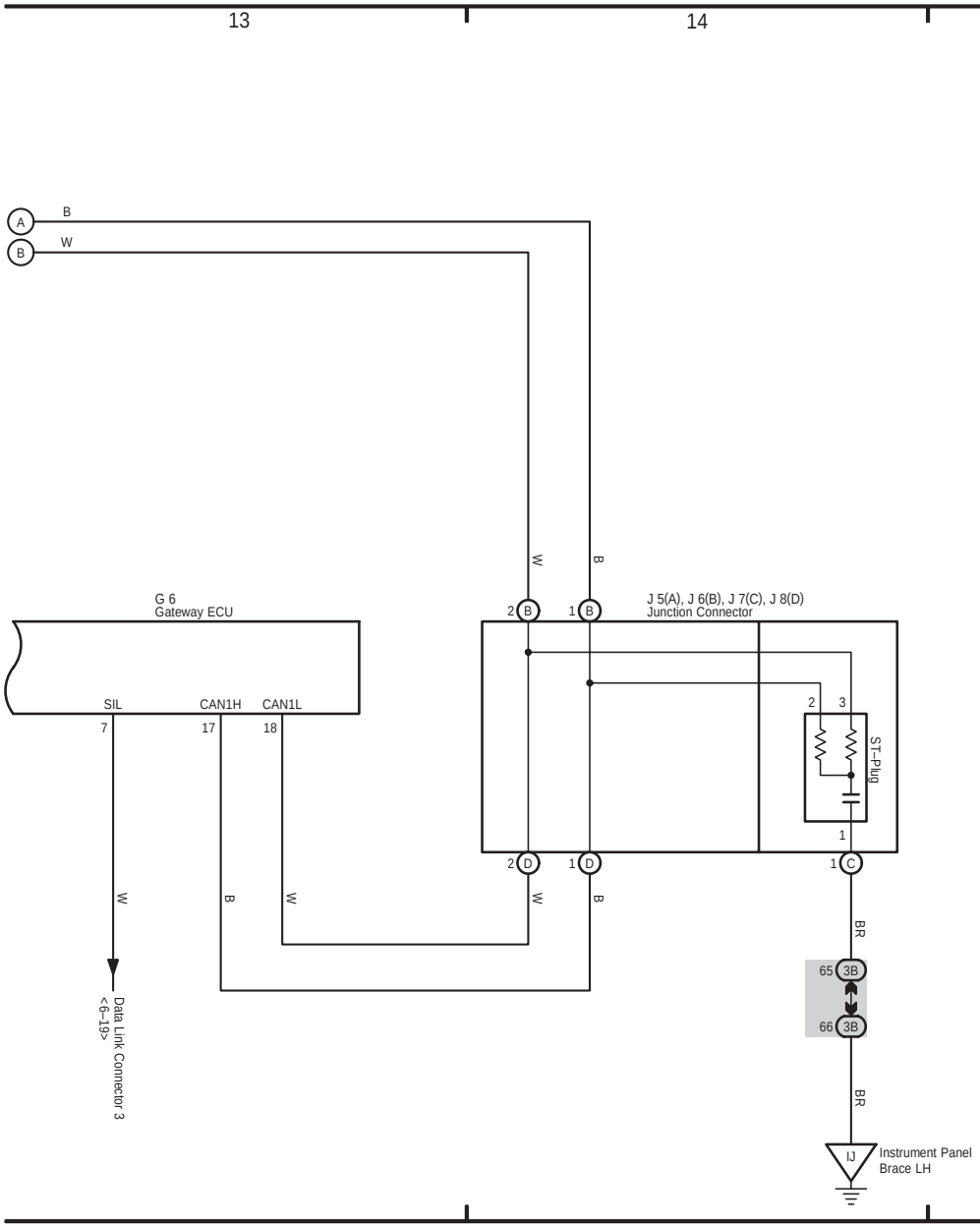

9 CAMRY SOLARA

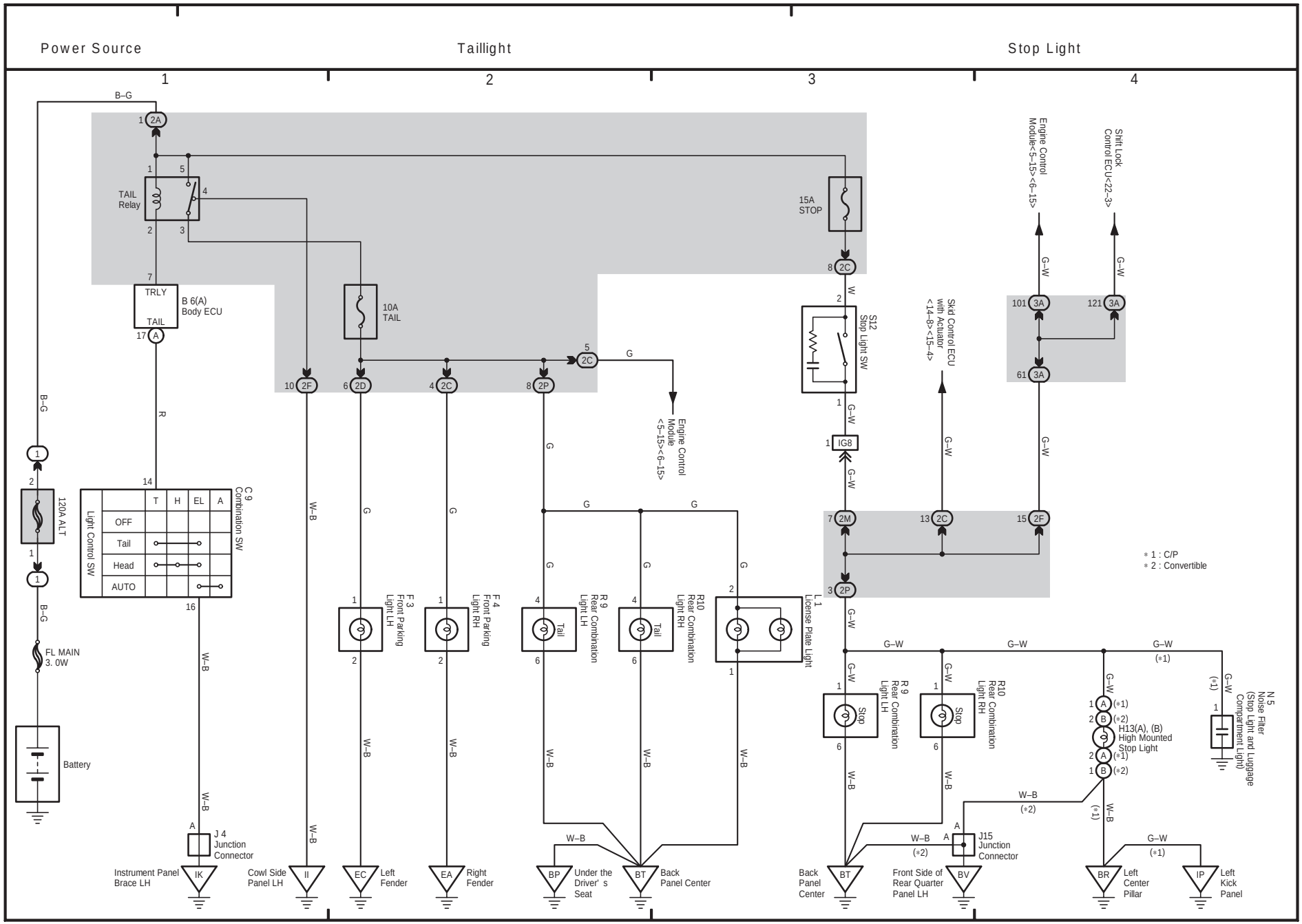

10 CAMRY SOLARA

(Cont. next page)

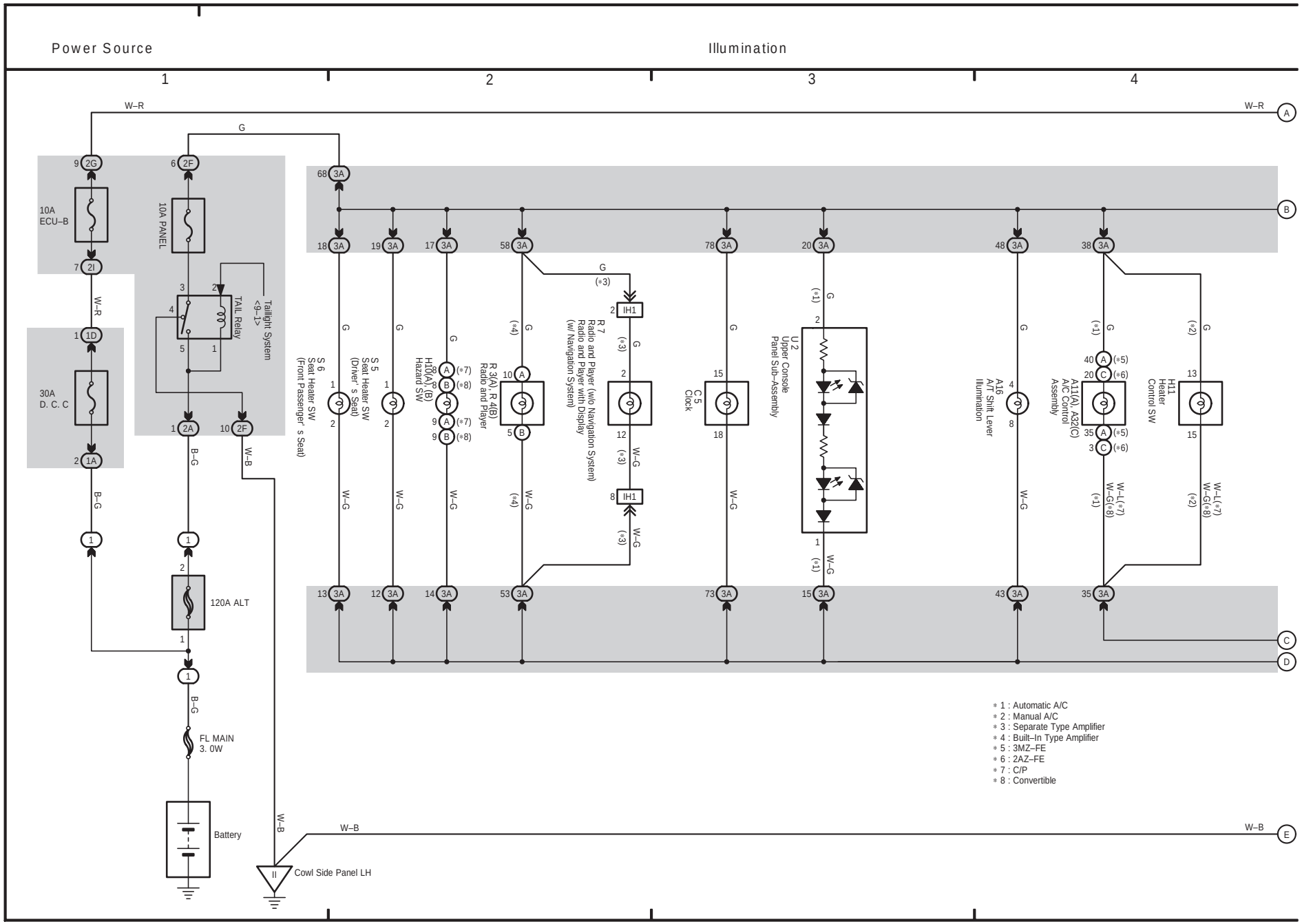

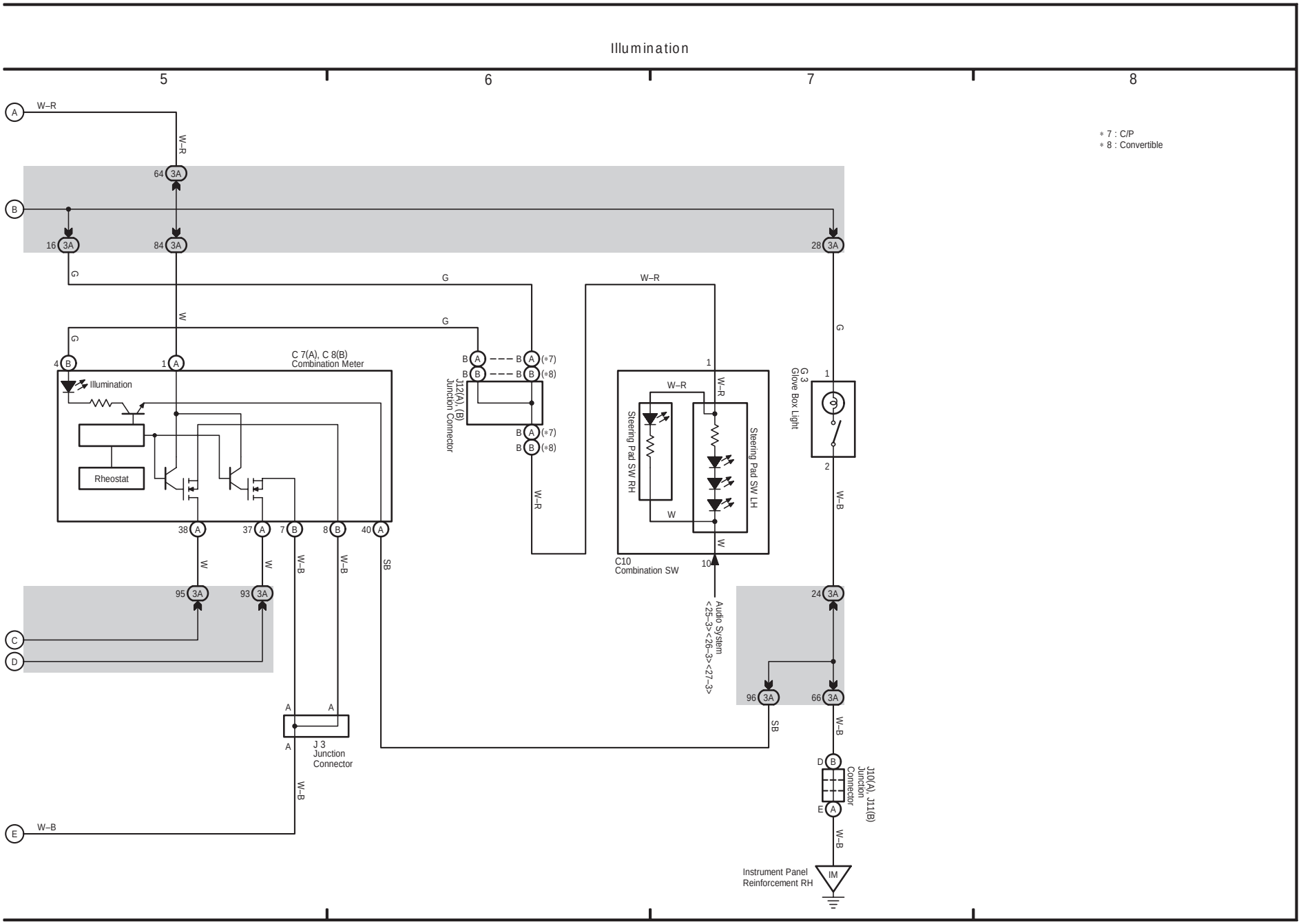
Illumination
5
6
7
8
* 7 : C/P
* 8 : Convertible
C 7(A), C 8(B)
Combination Meter
Illumination
Rheostat
J12(A), J(B)
Junction Connector
C10
Combination SW
Steering Pad SW RH
Steering Pad SW LH
G 3
Glove Box Light
J 3
Junction
Connector
Audio System
<25-3><26-3><27-3>
J10(A), J11(B)
Junction
Connector
Instrument Panel
Reinforcement RH
IM
W–R
W
G
W–B
SB

11 CAMRY SOLARA

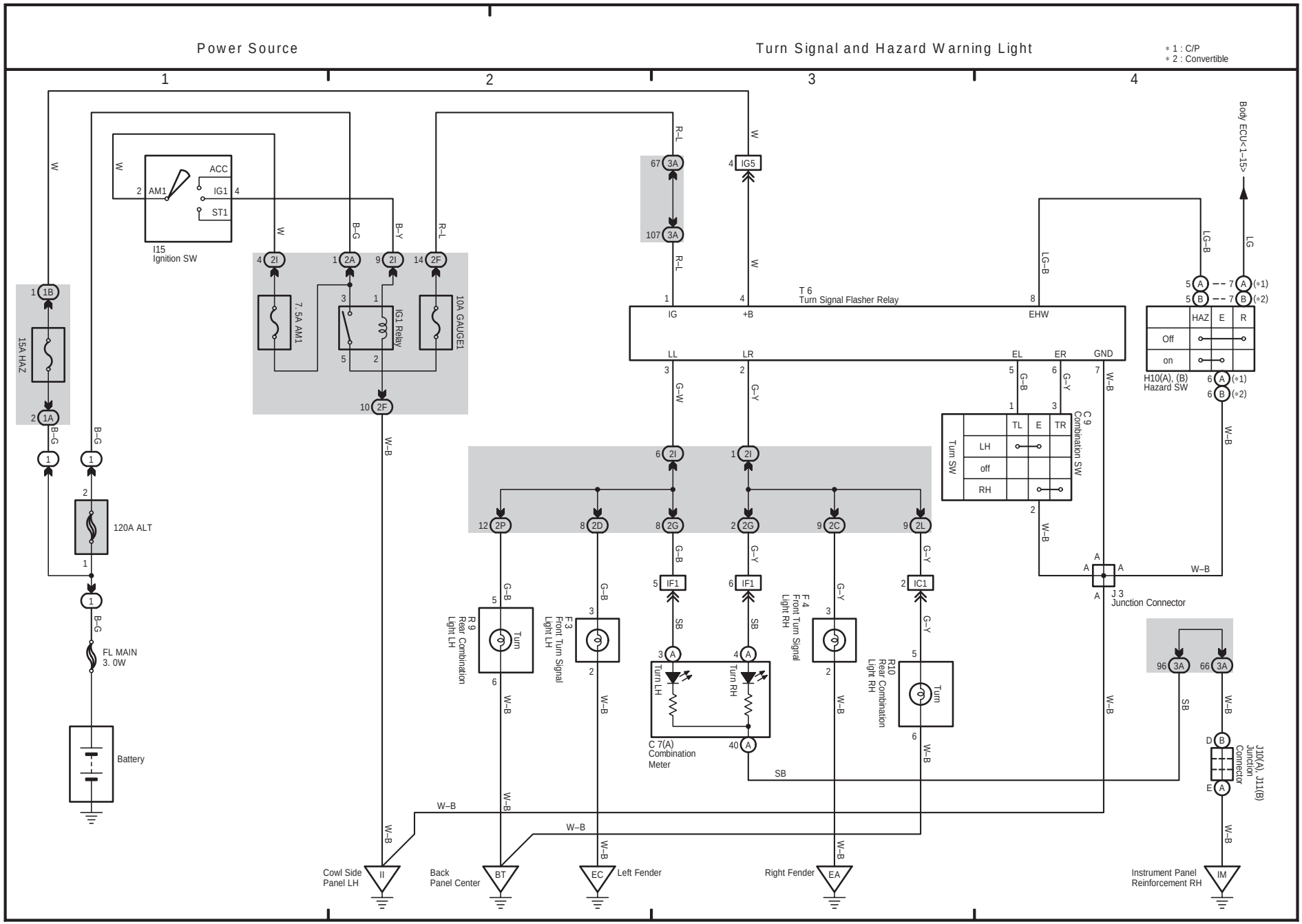

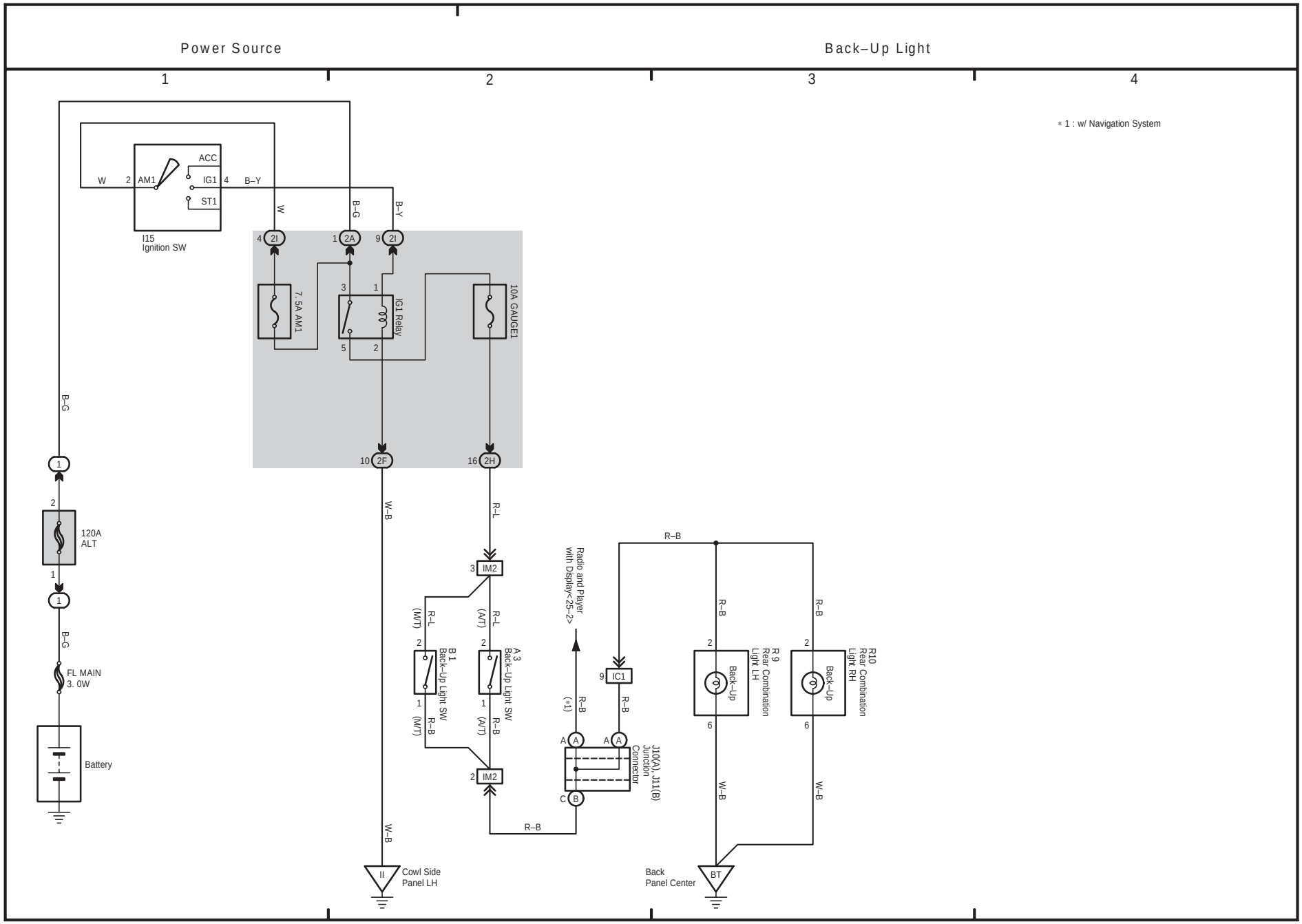
Power Source
Back–Up Light
1
2
3
4
* 1 : w/ Navigation System
ACC
IG1
ST1
AM1
W
B–Y
I15
Ignition SW
2I
2A
7. 5A AM1
IG1 Relay
10A GAUGE1
B–G
2F
2H
W–B
R–L
120A
ALT
FL MAIN
3. 0W
Battery
IM2
B 1
Back–Up Light SW
(M/T)
A 3
Back–Up Light SW
(A/T)
Radio and Player
with Display< 25–2>
(*1)
IC1
J10(A), J11(B)
Junction
Connector
R–B
R 9
Rear Combination
Light LH
Back–Up
R10
Rear Combination
Light RH
Cowl Side
Panel LH
Back
Panel Center
BT

13 CAMRY SOLARA

(Cont. next page)

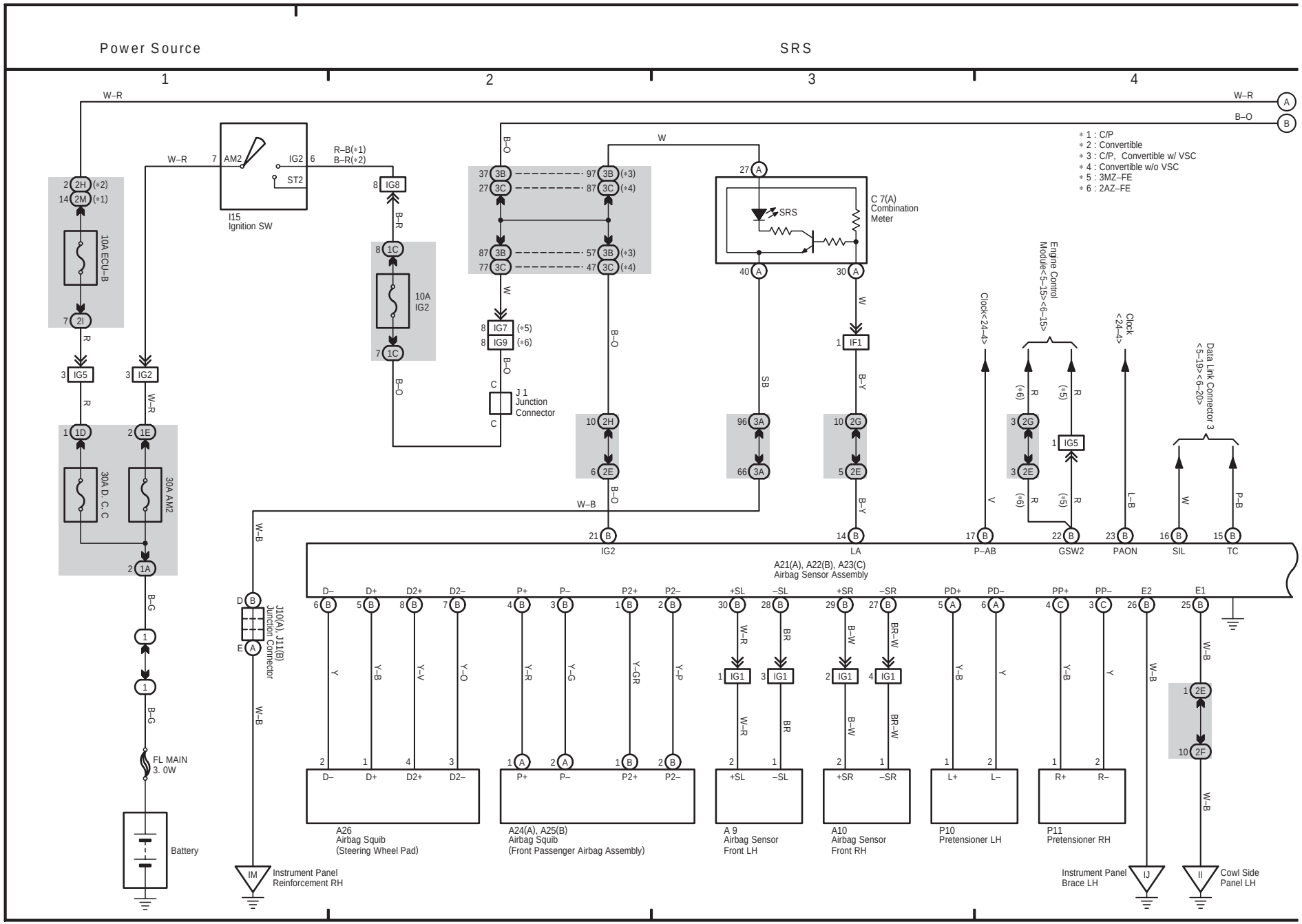

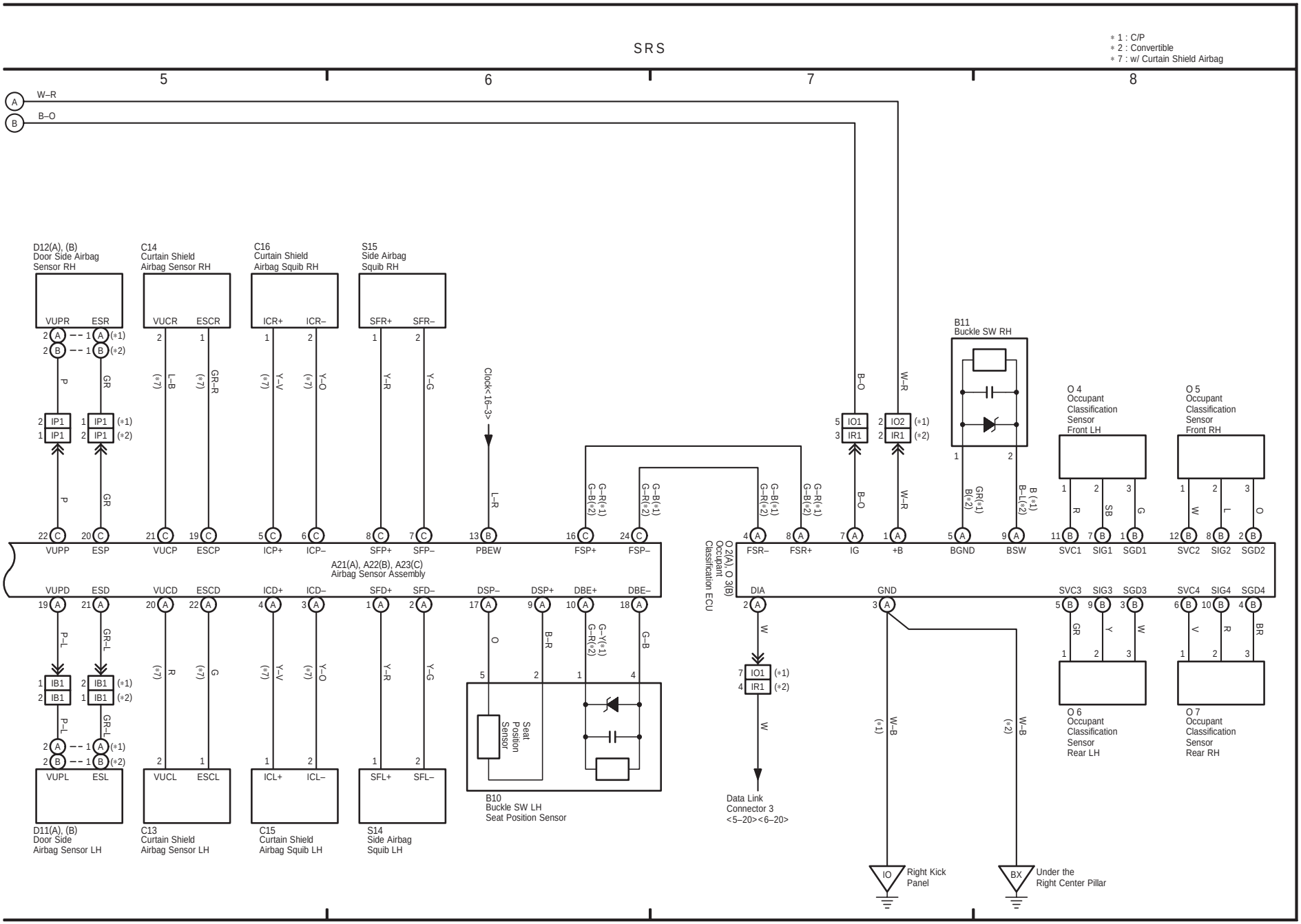
SRS
* 1 : C/P
* 2 : Convertible
* 7 : w/ Curtain Shield Airbag
5
6
7
8
W–R
B–O
D12(A), (B)
Door Side Airbag
Sensor RH
C14
Curtain Shield
Airbag Sensor RH
C16
Curtain Shield
Airbag Squib RH
S15
Side Airbag
Squib RH
B11
Buckle SW RH
O 4
Occupant
Classification
Sensor
Front LH
O 5
Occupant
Classification
Sensor
Front RH
VUPR
ESR
VUCR
ESCR
ICR+
ICR–
SFR+
SFR–
Clock<16–3>
VUPP
ESP
VUCP
ESCP
ICP+
ICP–
SFP+
SFP–
PBEW
FSP+
FSP–
FSR–
FSR+
IG
+B
BGND
BSW
SVC1
SIG1
SGD1
SVC2
SIG2
SGD2
A21(A), A22(B), A23(C)
Airbag Sensor Assembly
O 2(A), O 3(B)
Occupant
Classification ECU
VUPD
ESD
VUCD
ESCD
ICD+
ICD–
SFD+
SFD–
DSP–
DSP+
DBE+
DBE–
DIA
GND
SVC3
SIG3
SGD3
SVC4
SIG4
SGD4
VUPL
ESL
VUCL
ESCL
ICL+
ICL–
SFL+
SFL–
Seat
Position
Sensor
B10
Buckle SW LH
Seat Position Sensor
Data Link
Connector 3
<5–20><6–20>
O 6
Occupant
Classification
Sensor
Rear LH
O 7
Occupant
Classification
Sensor
Rear RH
D11(A), (B)
Door Side
Airbag Sensor LH
C13
Curtain Shield
Airbag Sensor LH
C15
Curtain Shield
Airbag Squib LH
S14
Side Airbag
Squib LH
IO
Right Kick
Panel
BX
Under the
Right Center Pillar

14 CAMRY SOLARA

(Cont. next page)

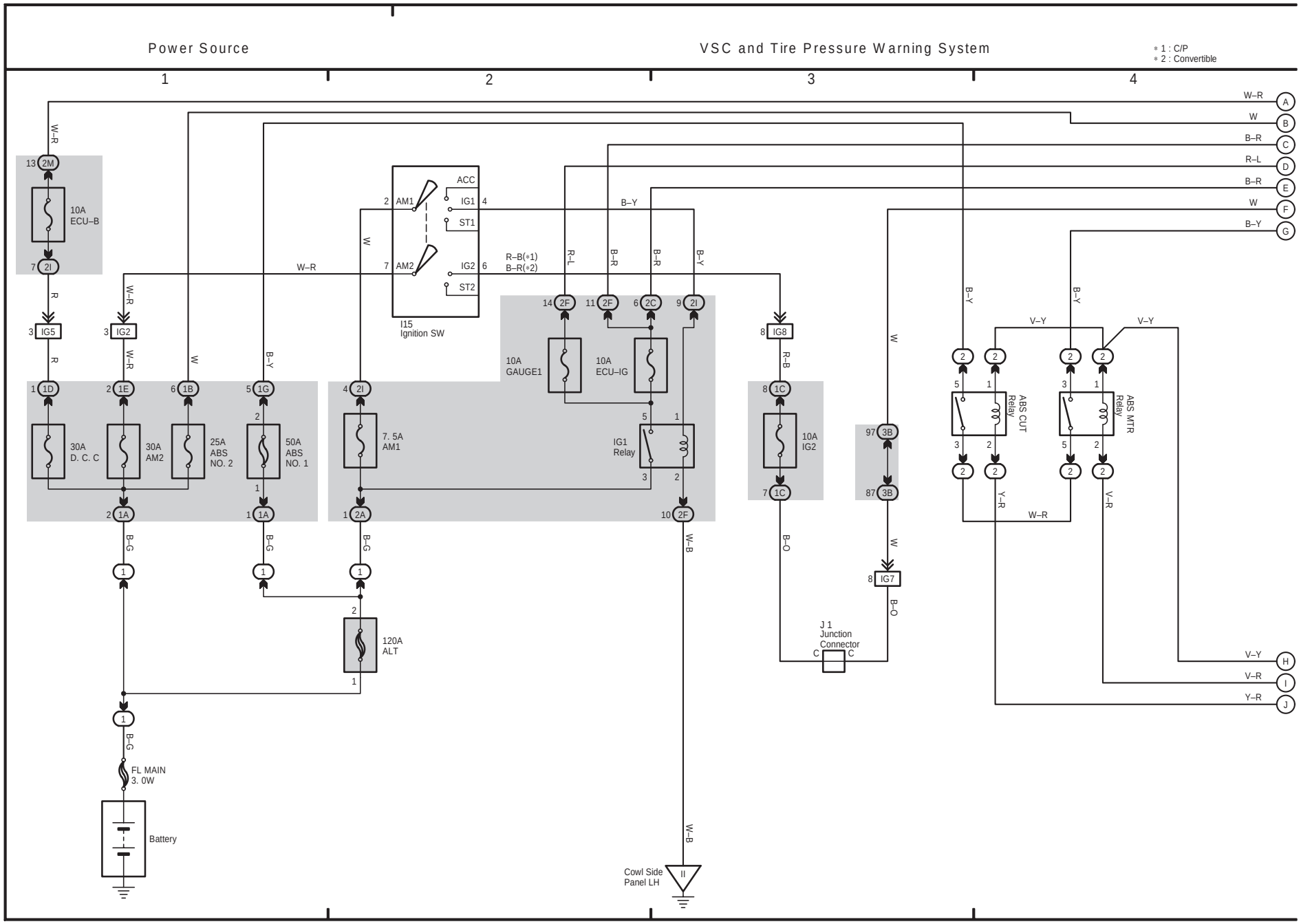

(Cont. next page)

VSC and Tire Pressure Warning System

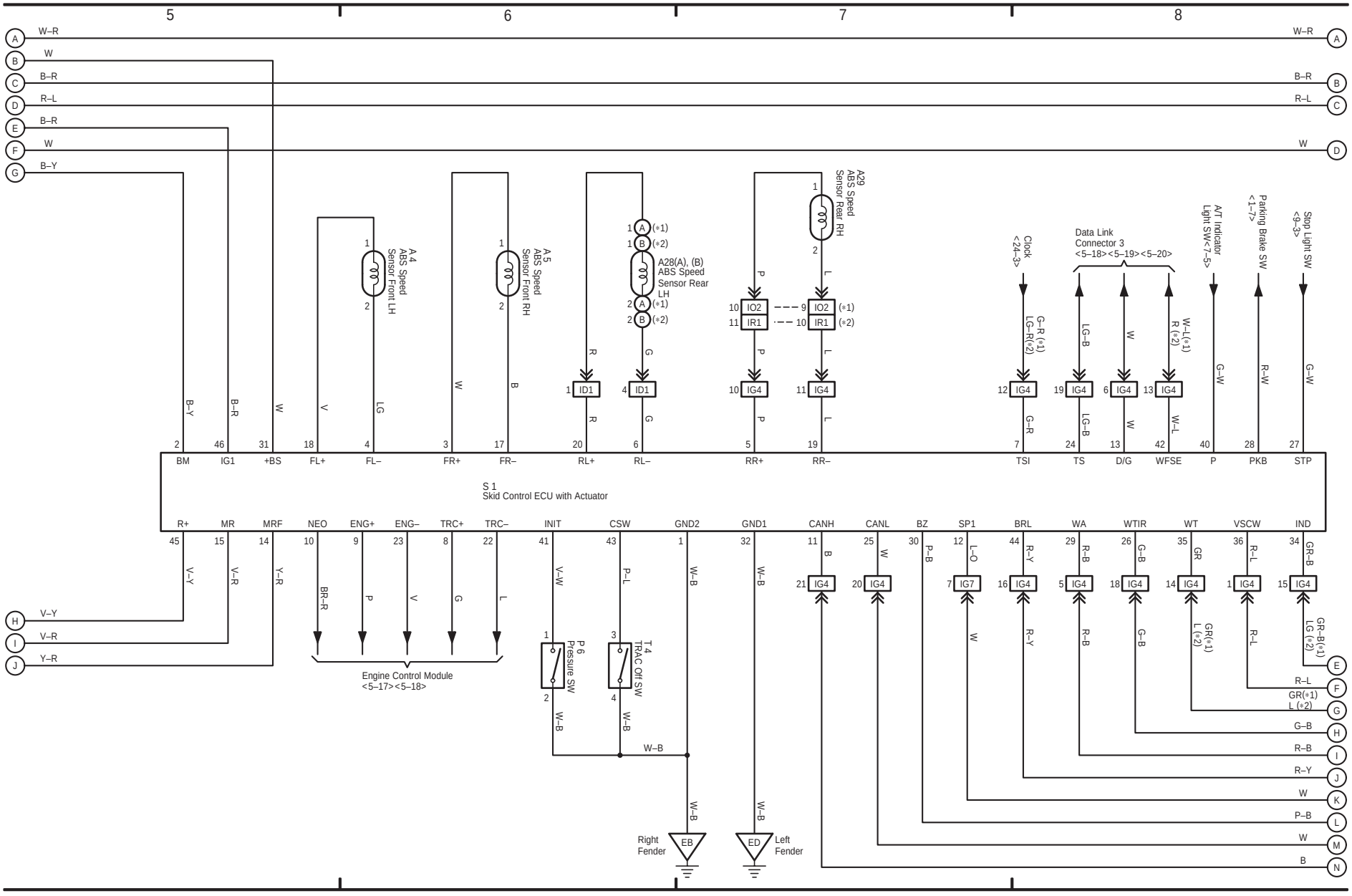

14 CAMRY SOLARA (Cont' d)

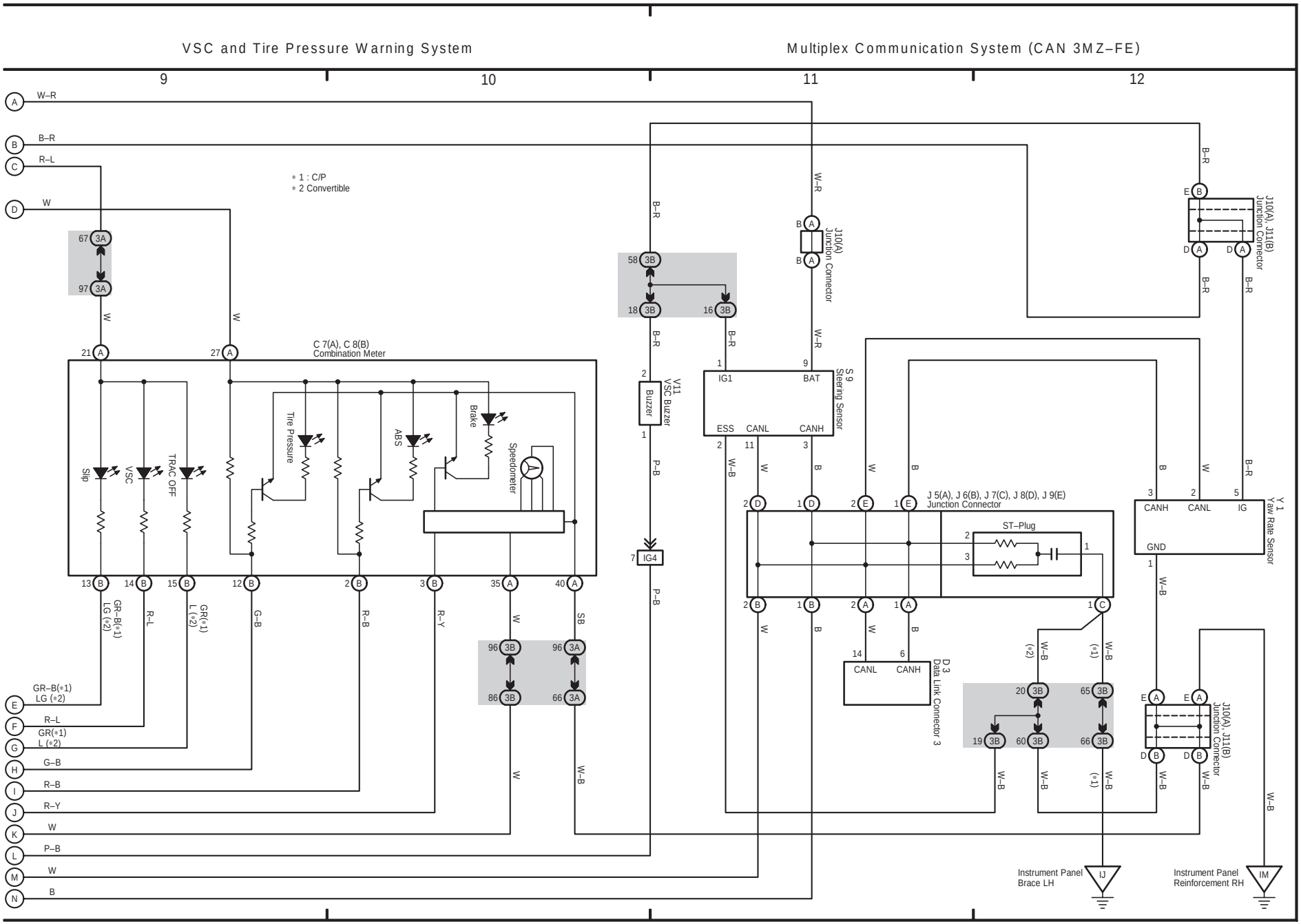

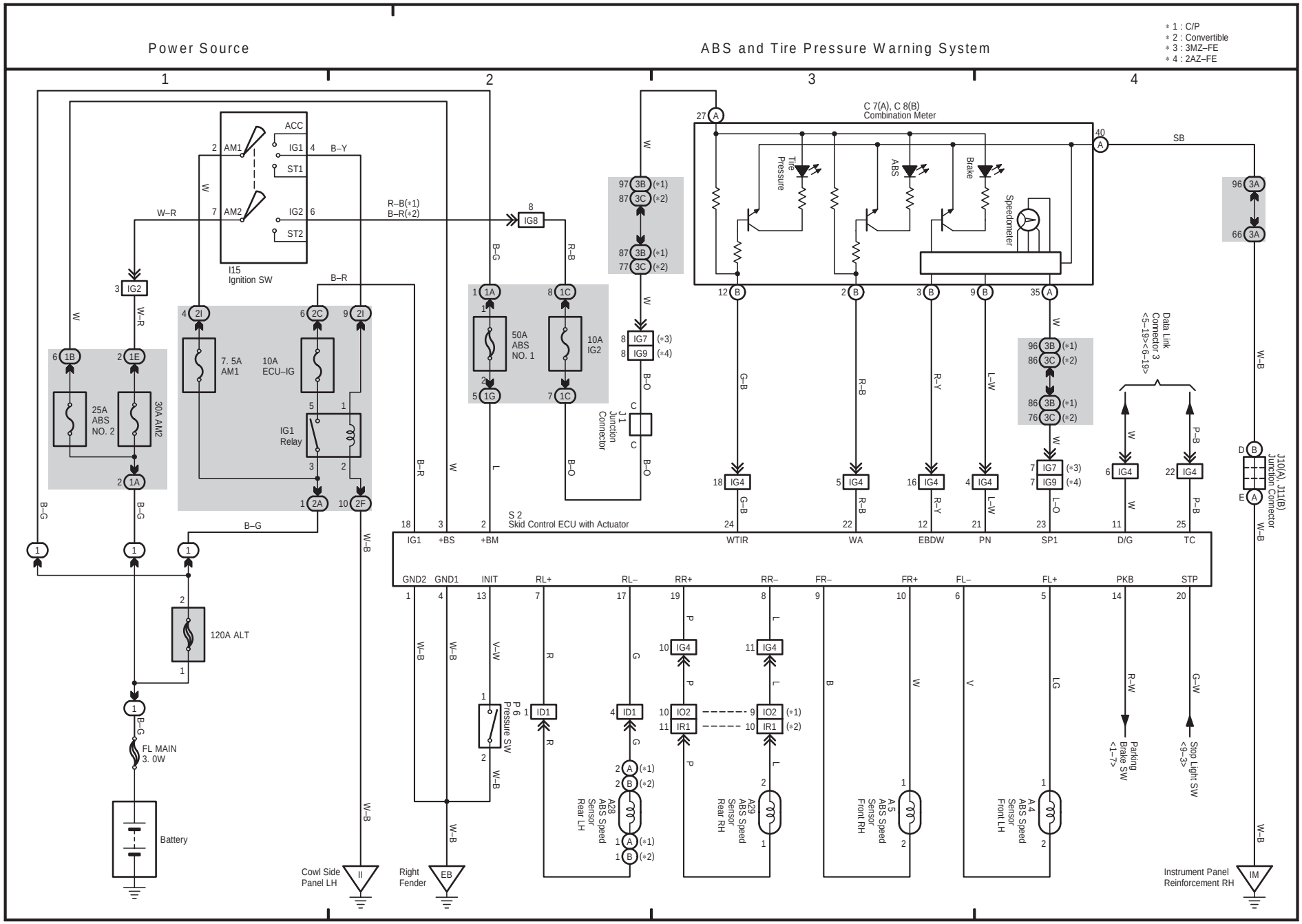
Power Source
ABS and Tire Pressure Warning System
* 1 : C/P
* 2 : Convertible
* 3 : 3MZ–FE
* 4 : 2AZ–FE
I15
Ignition SW
ACC
IG1
ST1
IG2
ST2
AM1
AM2
B–Y
W–R
R–B(*1)
B–R(*2)
IG8
25A
ABS
NO. 2
30A AM2
7. 5A
AM1
10A
ECU–IG
IG1
Relay
50A
ABS
NO. 1
10A
IG2
J1
Junction
Connector
C 7(A), C 8(B)
Combination Meter
Tire
Pressure
ABS
Brake
Speedometer
SB
Data Link
Connector 3
<5–19><6–19>
J10(A), J11(B)
Junction Connector
S 2
Skid Control ECU with Actuator
IG1
+BS
+BM
WTIR
WA
EBDW
PN
SP1
D/G
TC
GND2
GND1
INIT
RL+
RL–
RR+
RR–
FR–
FR+
FL–
FL+
PKB
STP
120A ALT
FL MAIN
3. 0W
Battery
P 6
Pressure SW
A26
ABS Speed
Sensor
Rear LH
A29
ABS Speed
Sensor
Rear RH
A 5
ABS Speed
Sensor
Front RH
A 4
ABS Speed
Sensor
Front LH
Parking
Brake SW
<1–7>
Stop Light SW
<9–3>
Cowl Side
Panel LH
Right
Fender
Instrument Panel
Reinforcement RH

16 CAMRY SOLARA

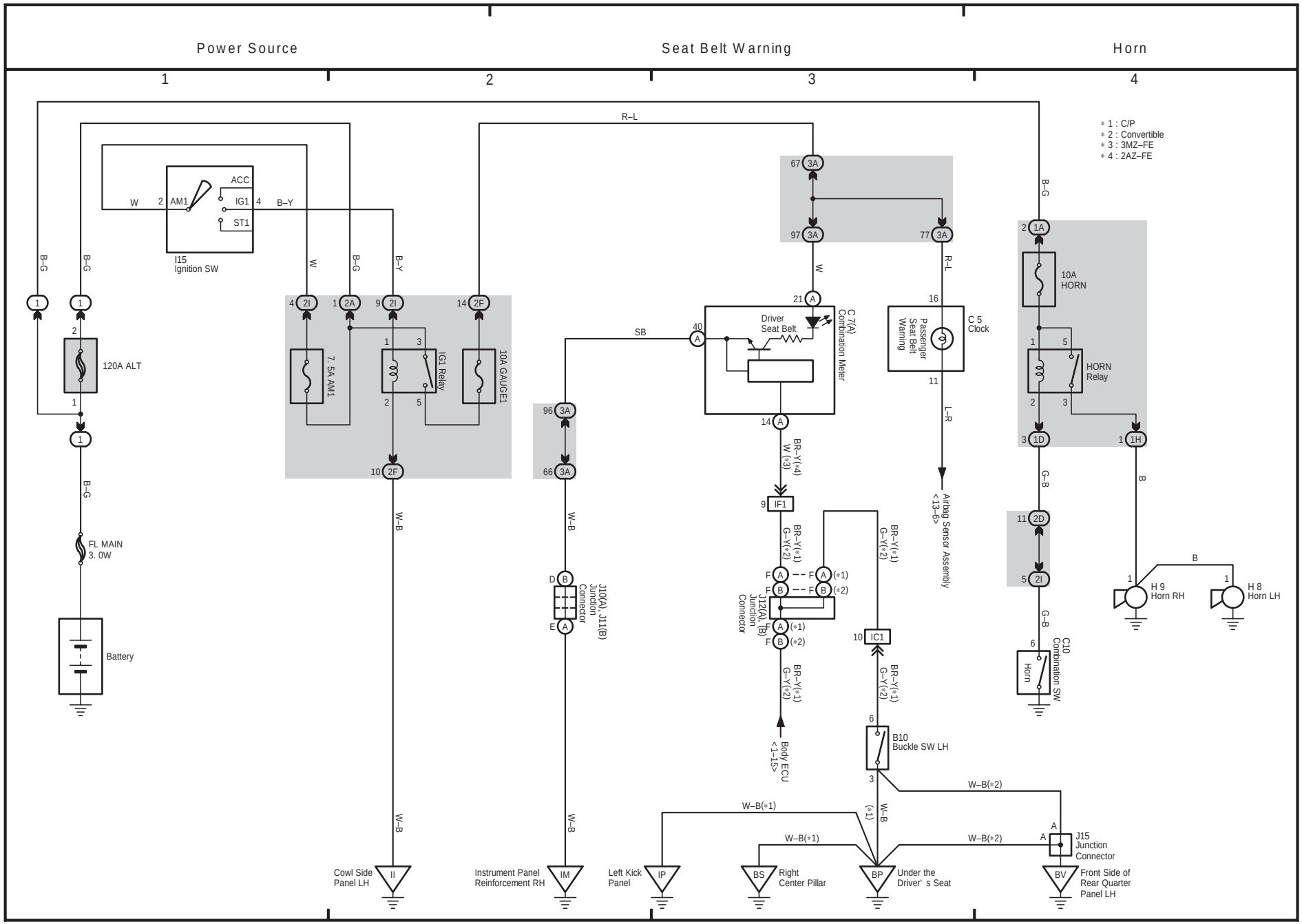

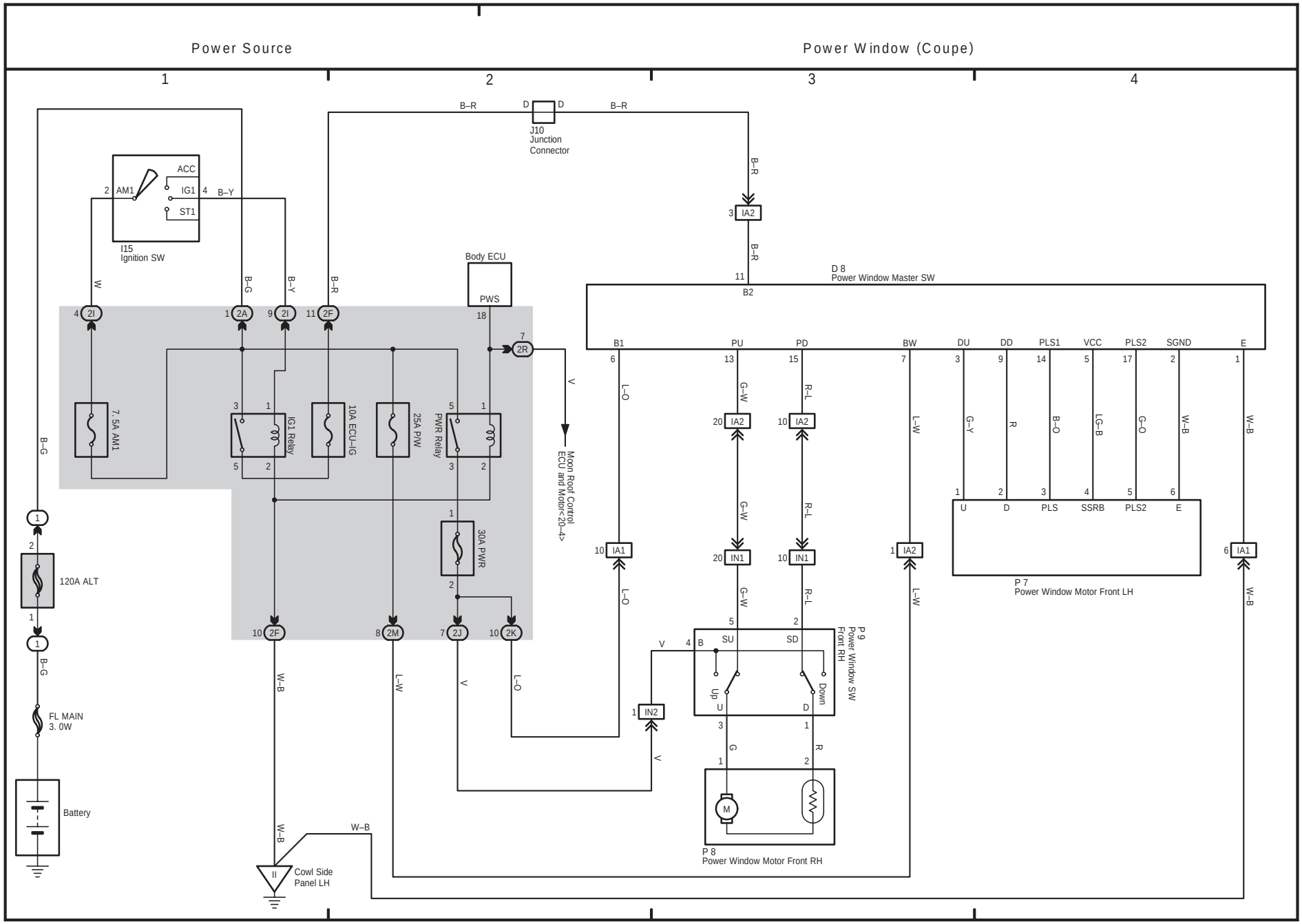
Power Source
Power Window (Coupe)
1
2
3
4
J10
Junction
Connector
I15
Ignition SW
ACC
IG1
ST1
AM1
Body ECU
PWS
D 8
Power Window Master SW
B1
PU
PD
BW
DU
DD
PLS1
VCC
PLS2
SGND
E
7. 5A AM1
IG1 Relay
10A ECU–IG
25A P/W
PWR Relay
30A PWR
Moon Roof Control
ECU and Motor<20–4>
120A ALT
FL MAIN
3. 0W
Battery
Cowl Side
Panel LH
P 7
Power Window Motor Front LH
P 9
Power Window SW
Front RH
Up
Down
P 8
Power Window Motor Front RH

18 CAMRY SOLARA

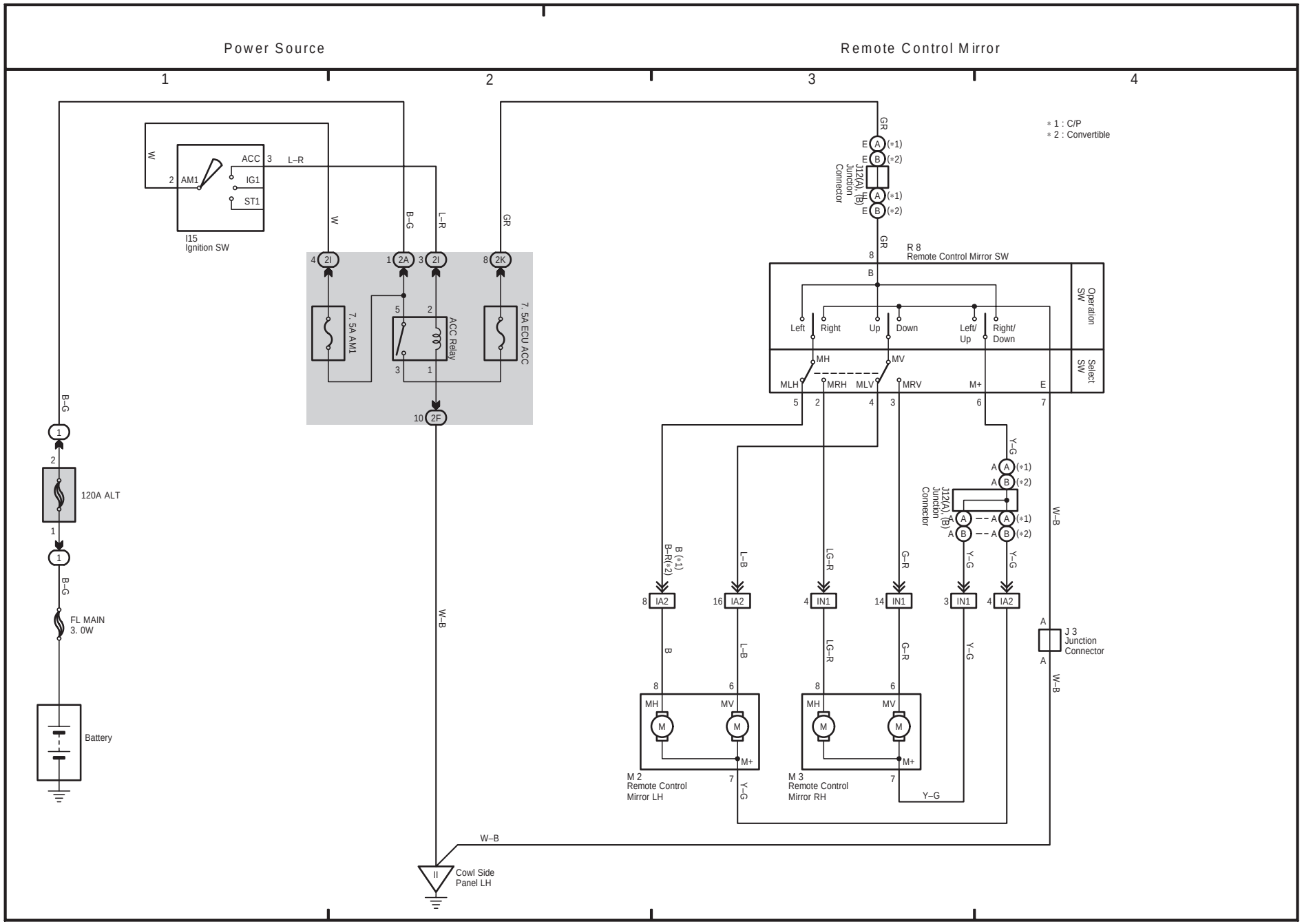

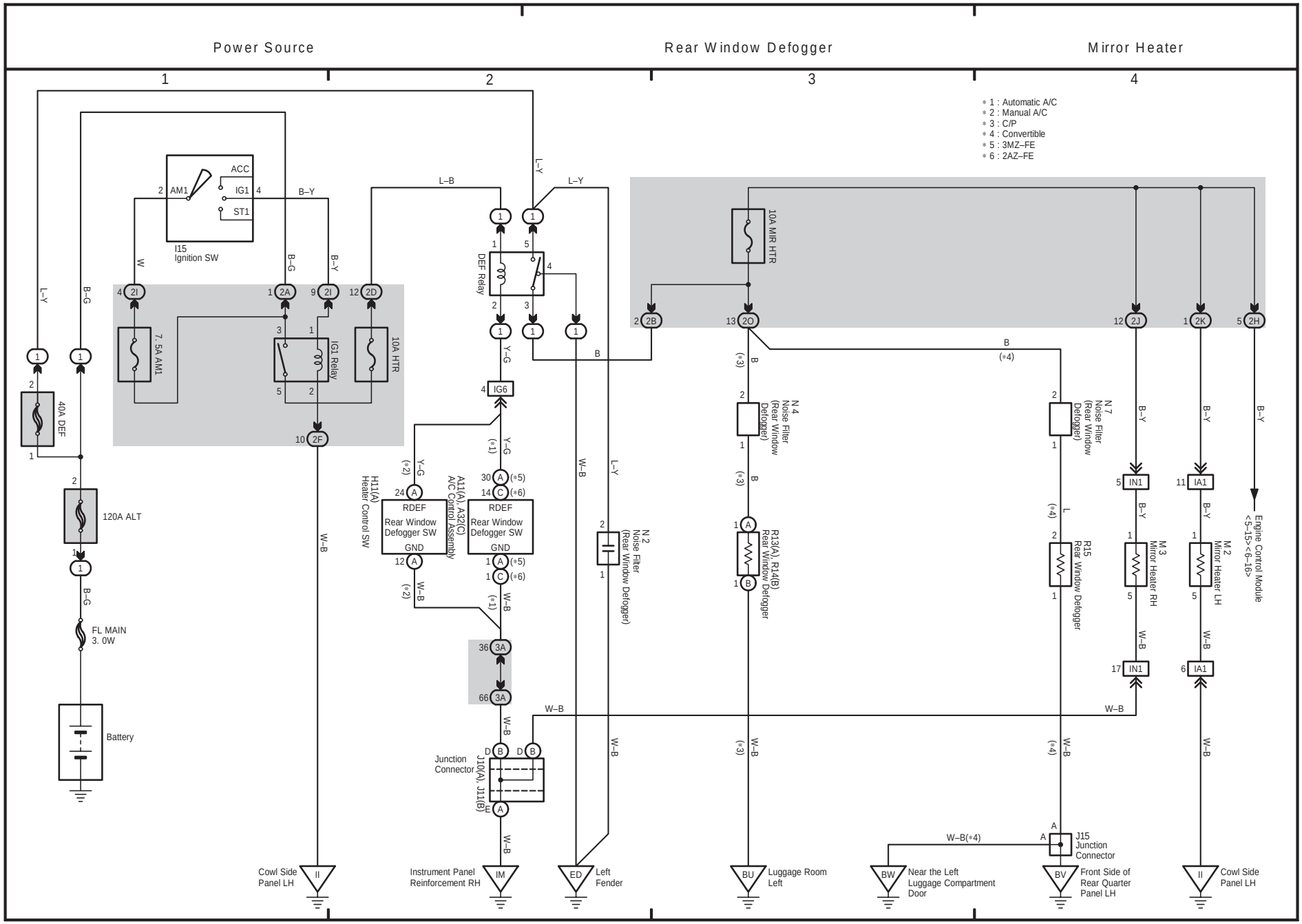
Power Source
Rear Window Defogger
Mirror Heater
1
2
3
4
* 1 : Automatic A/C
* 2 : Manual A/C
* 3 : C/P
* 4 : Convertible
* 5 : 3MZ–FE
* 6 : 2AZ–FE
I15
Ignition SW
ACC
AM1
IG1
ST1
7. 5A AM1
IG1 Relay
10A HTR
DEF Relay
40A DEF
120A ALT
FL MAIN
3. 0W
Battery
H11(A)
Heater Control SW
A11(A), A32(C)
A/C Control Assembly
RDEF
Rear Window
Defogger SW
GND
Junction
Connector
J10(A), J11(B)
N 2
Noise Filter
(Rear Window Defogger)
N 4
Noise Filter
(Rear Window
Defogger)
R13(A), R14(B)
Rear Window Defogger
10A MIR HTR
N 7
Noise Filter
(Rear Window
Defogger)
R15
Rear Window Defogger
M 3
Mirror Heater RH
M 2
Mirror Heater LH
Engine Control Module
<5–15><6–16>
J15
Junction
Connector
Cowl Side
Panel LH
Instrument Panel
Reinforcement RH
Left
Fender
Luggage Room
Left
Near the Left
Luggage Compartment
Door
Front Side of
Rear Quarter
Panel LH
Cowl Side
Panel LH

20 CAMRY SOLARA

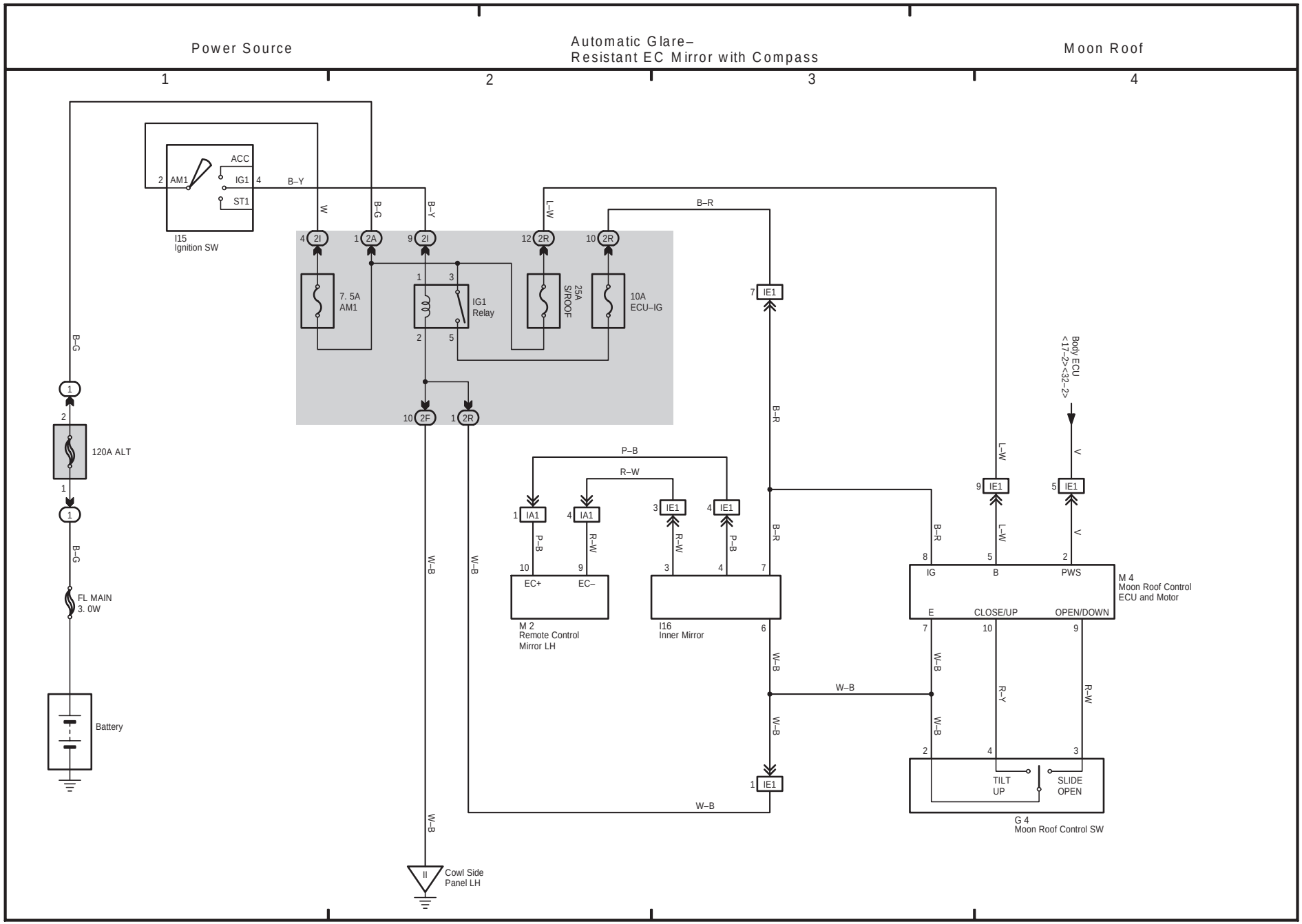

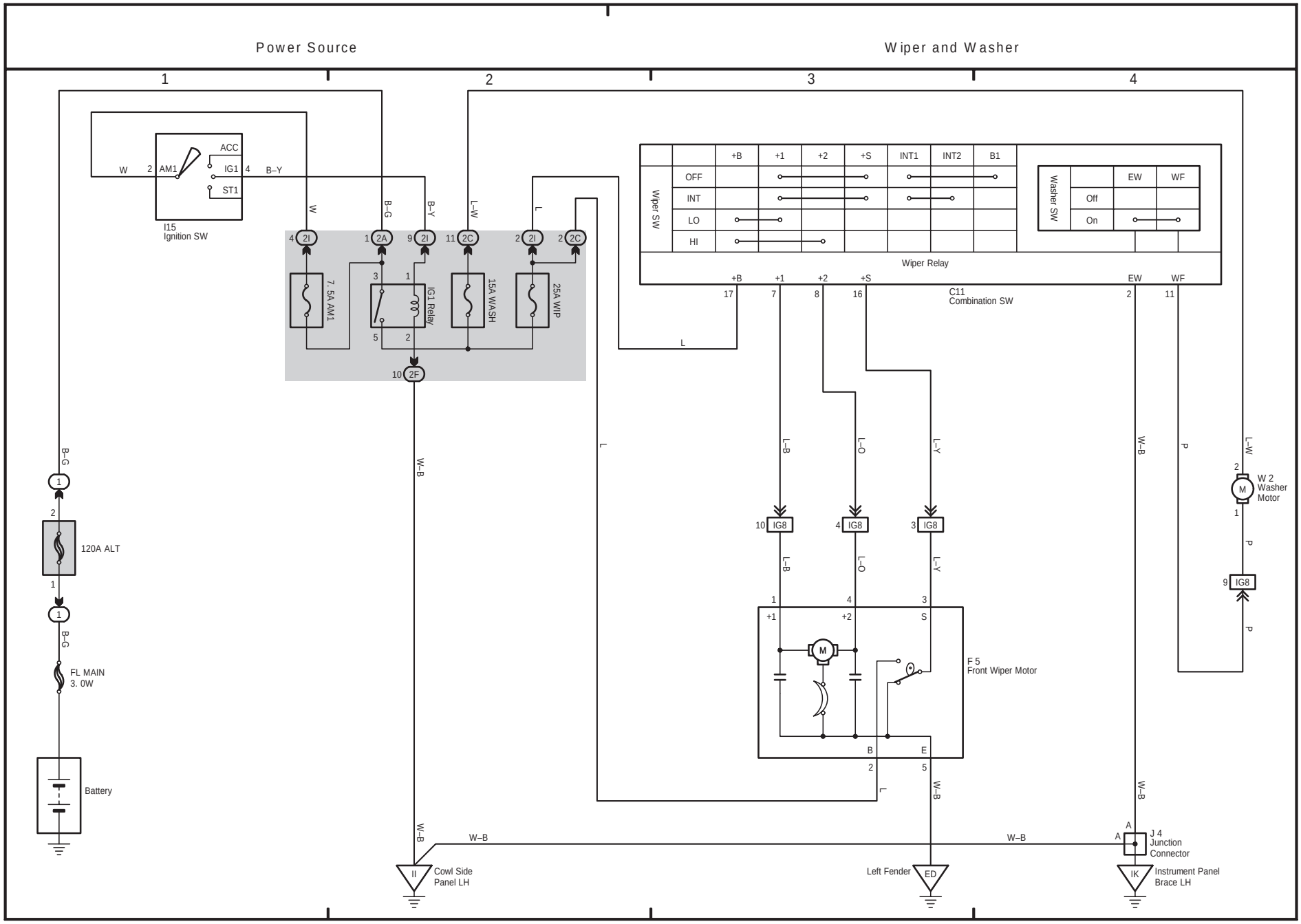
Power Source
Wiper and Washer
1
2
3
4
ACC
IG1
ST1
AM1
W
B–Y
I15
Ignition SW
2I
2A
2C
7. 5A AM1
IG1 Relay
15A WASH
25A WIP
2F
W
B–G
L–W
L
+B
+1
+2
+S
INT1
INT2
B1
OFF
INT
LO
HI
Wiper SW
Wiper Relay
EW
WF
Off
On
Washer SW
C11
Combination SW
L–B
L–O
L–Y
W–B
P
IG8
120A ALT
FL MAIN
3. 0W
Battery
W 2
Washer
Motor
F 5
Front Wiper Motor
J 4
Junction
Connector
Cowl Side
Panel LH
Left Fender
ED
Instrument Panel
Brace LH

22 CAMRY SOLARA

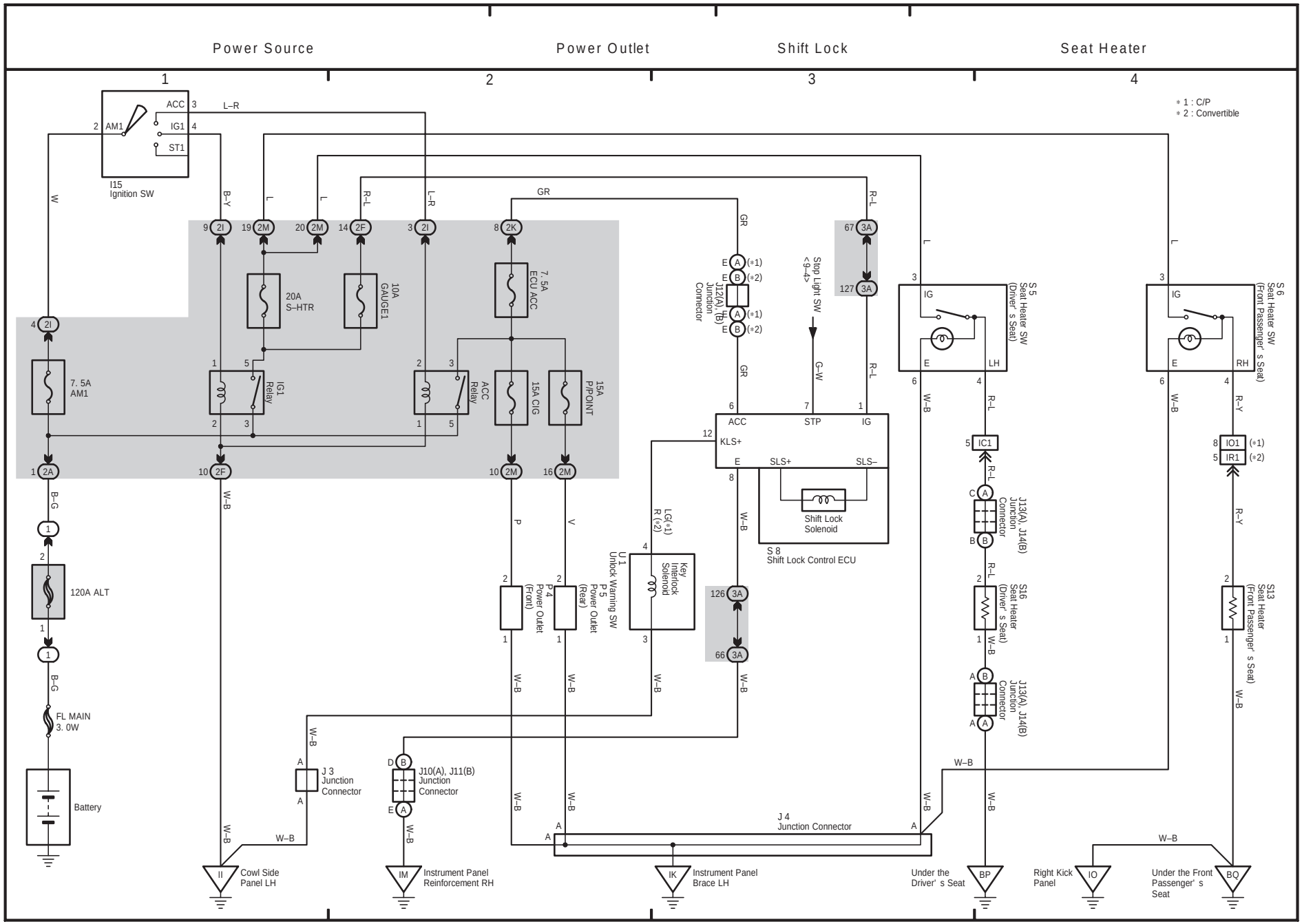

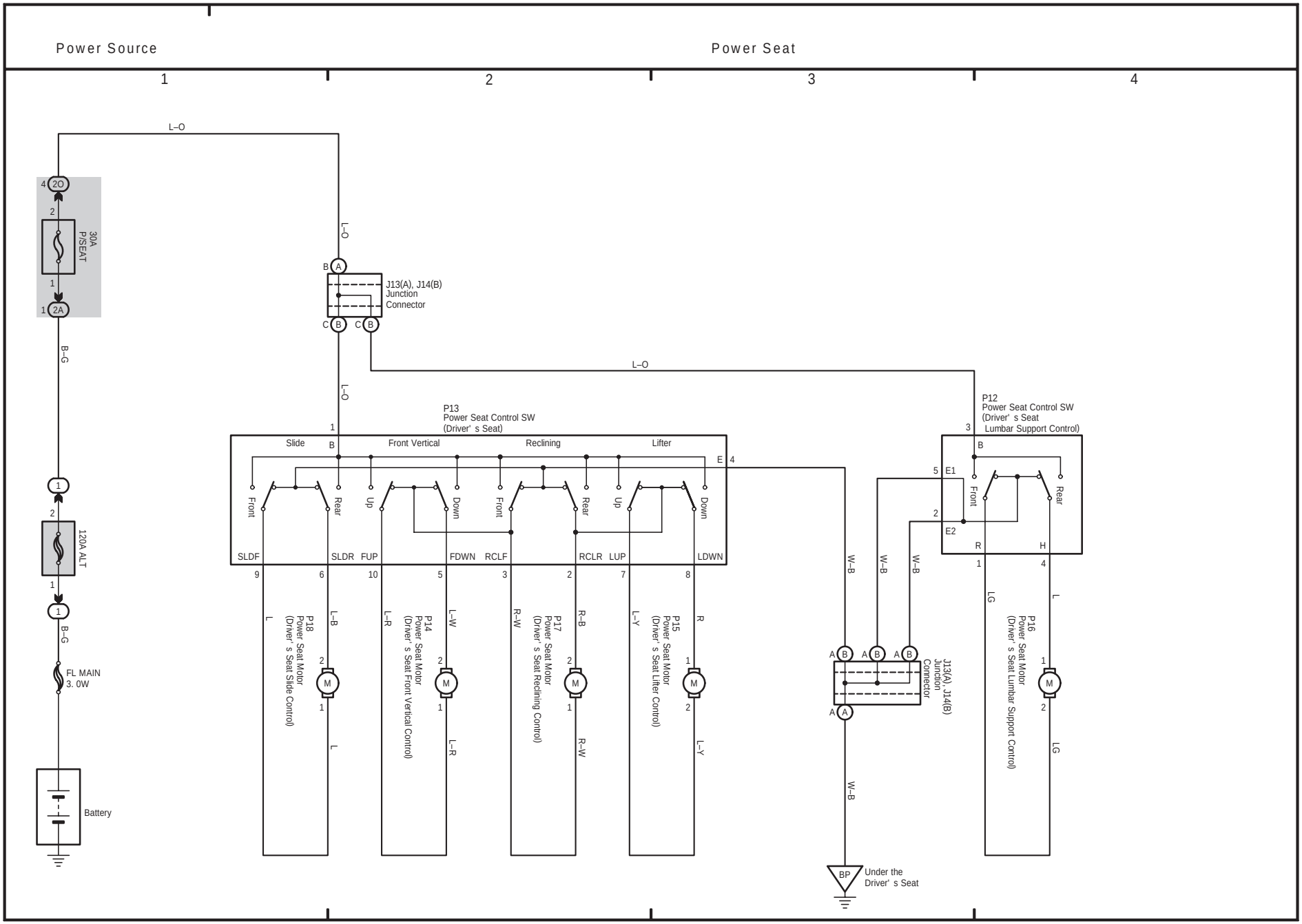
Power Source
Power Seat
1
2
3
4
L–O
30A
P/SEAT
B–G
120A ALT
FL MAIN
3. 0W
Battery
J13(A), J14(B)
Junction
Connector
P13
Power Seat Control SW
(Driver' s Seat)
Slide
Front Vertical
Reclining
Lifter
Front
Rear
Up
Down
SLDF
SLDR
FUP
FDWN
RCLF
RCLR
LUP
LDWN
P18
Power Seat Motor
(Driver' s Seat Slide Control)
P14
Power Seat Motor
(Driver' s Seat Front Vertical Control)
P17
Power Seat Motor
(Driver' s Seat Reclining Control)
P15
Power Seat Motor
(Driver' s Seat Lifter Control)
P12
Power Seat Control SW
(Driver' s Seat
Lumbar Support Control)
E1
E2
W–B
J13(A), J14(B)
Junction
Connector
P16
Power Seat Motor
(Driver' s Seat Lumbar Support Control)
BP
Under the
Driver' s Seat

24 CAMRY SOLARA

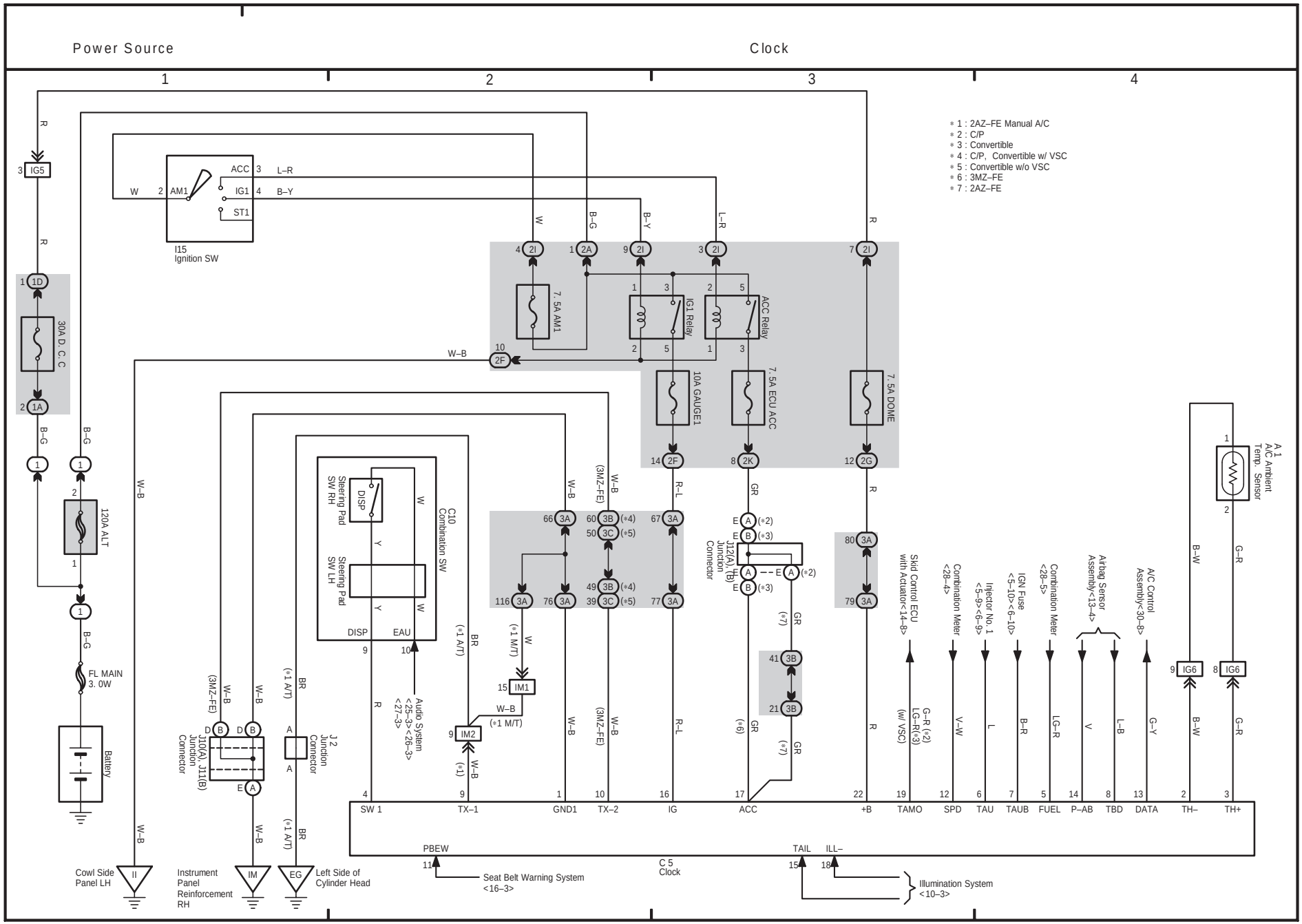

25 CAMRY SOLARA

(Cont. next page)

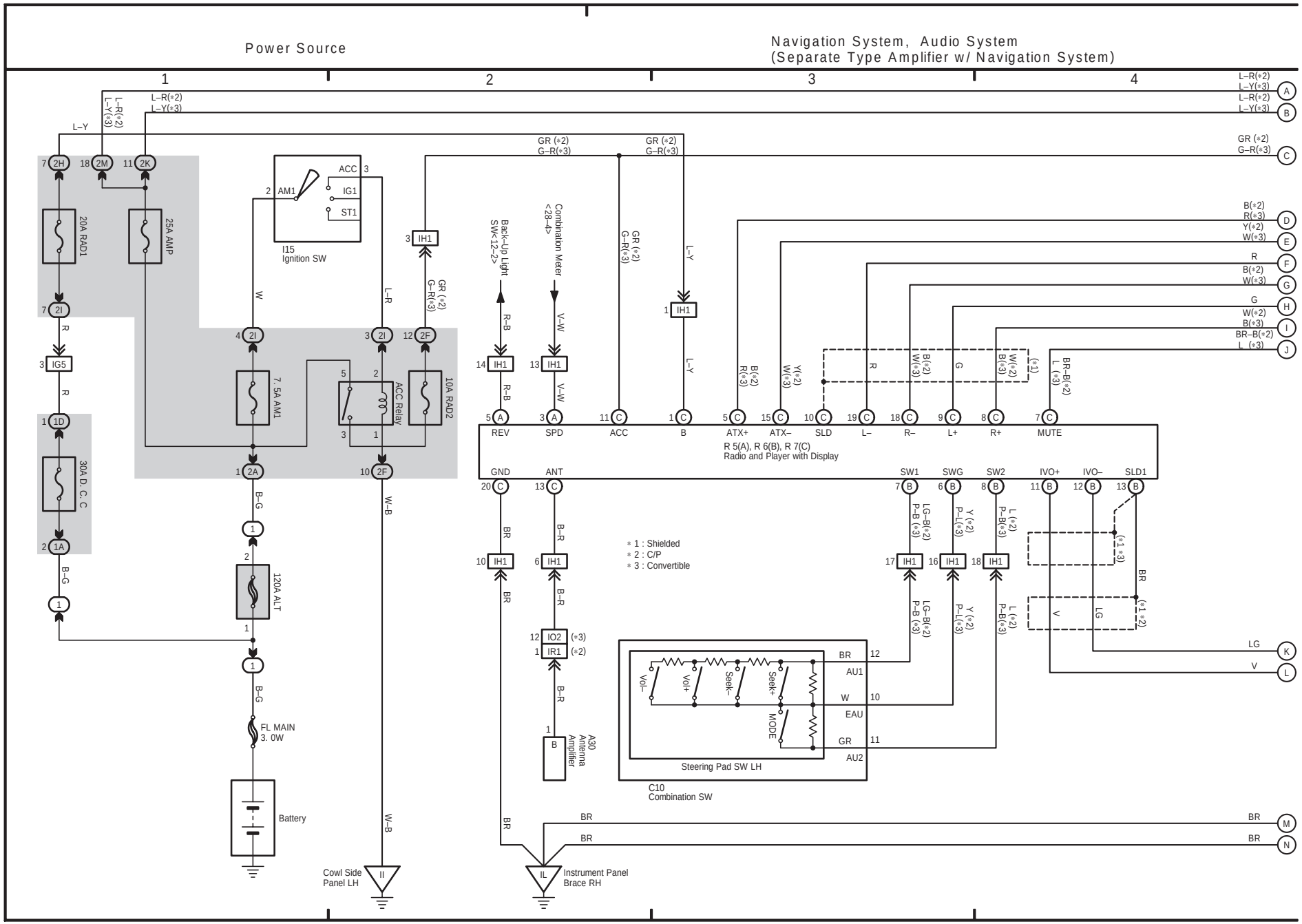

Navigation System, Audio System (Separate Type Amplifier w/ Navigation System)

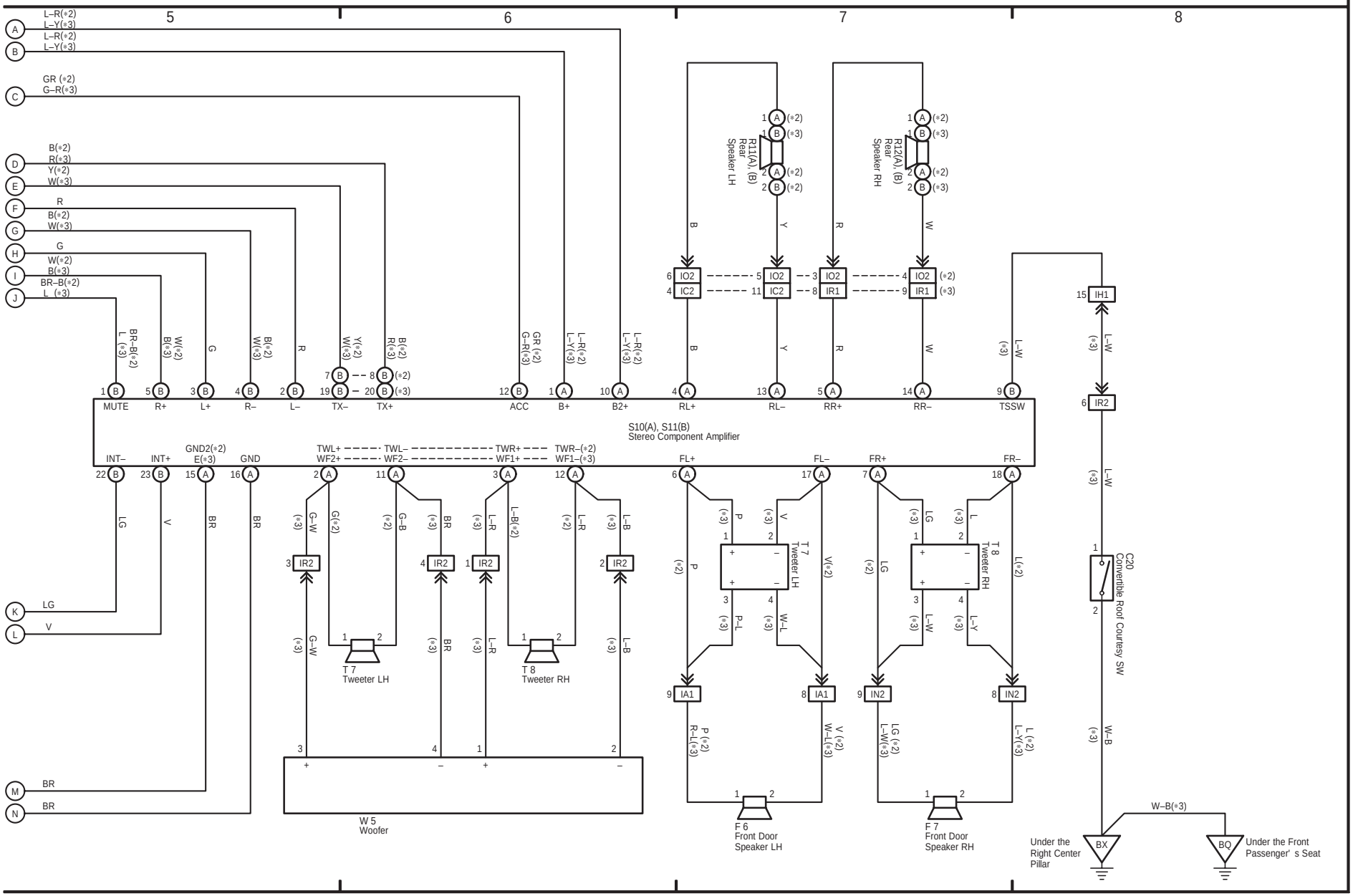

26 CAMRY SOLARA

(Cont. next page)

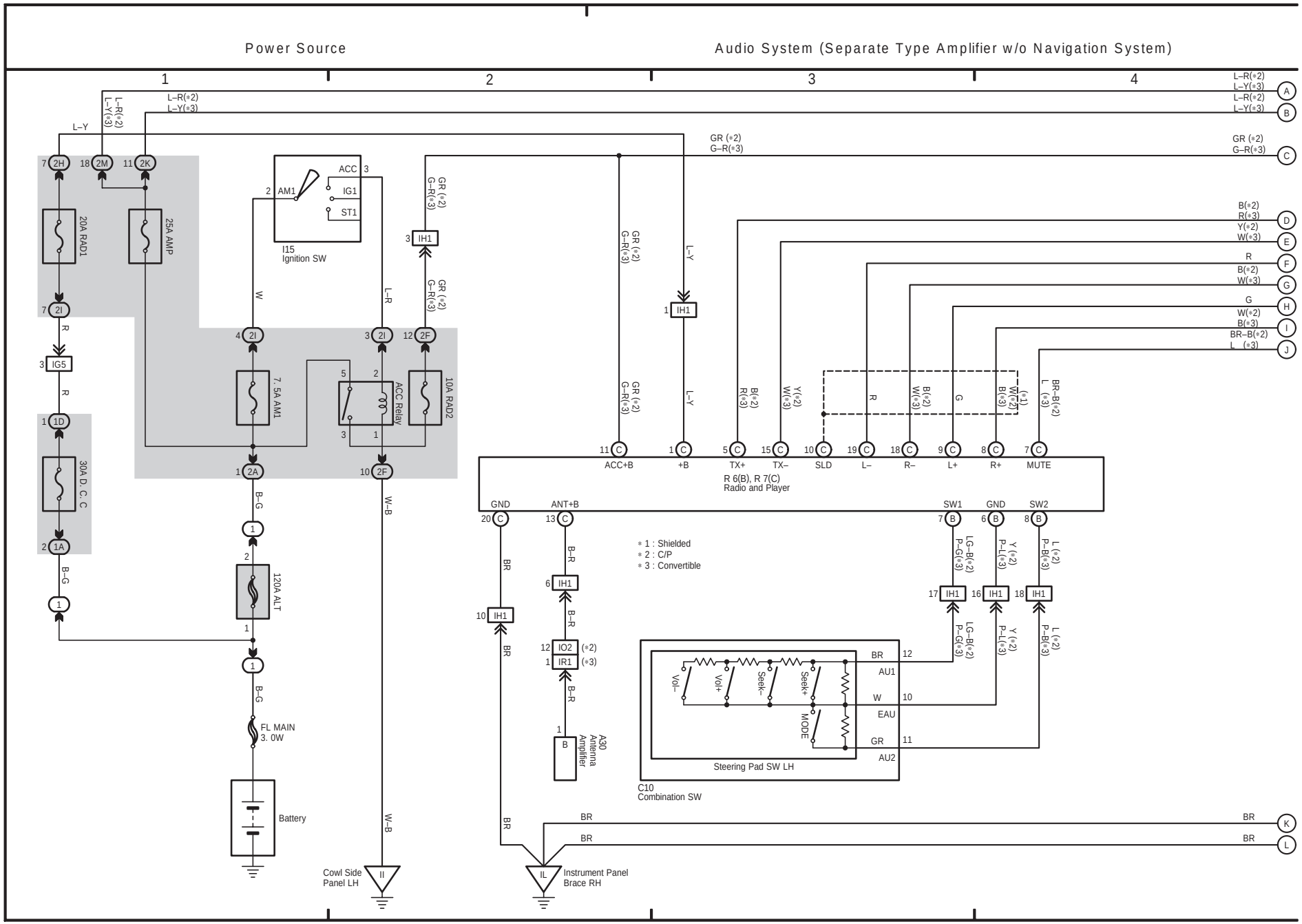

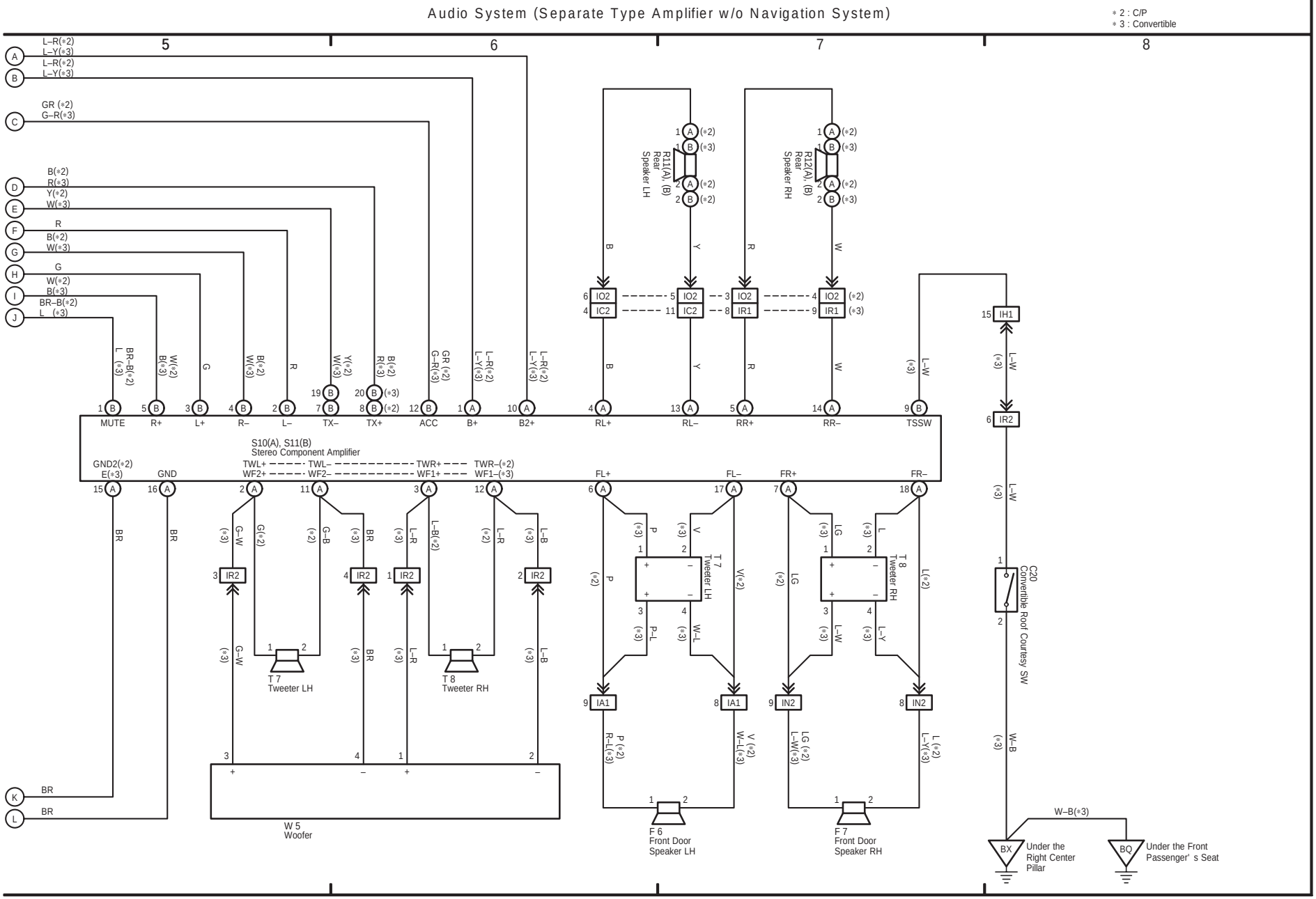
Audio System (Separate Type Amplifier w/o Navigation System)
* 2 : C/P
* 3 : Convertible
5
6
7
8
MUTE
R+
L+
R–
L–
TX–
TX+
ACC
B+
B2+
RL+
RL–
RR+
RR–
TSSW
S10(A), S11(B)
Stereo Component Amplifier
GND2(*2)
E(*3)
GND
FL+
FL–
FR+
FR–
R11(A), (B)
Rear
Speaker LH
R12(A), (B)
Rear
Speaker RH
T 7
Tweeter LH
T 8
Tweeter RH
C20
Convertible Roof Courtesy SW
W 5
Woofer
F 6
Front Door
Speaker LH
F 7
Front Door
Speaker RH
BX
Under the
Right Center
Pillar
BQ
Under the Front
Passenger' s Seat
W–B(*3)

27 CAMRY SOLARA

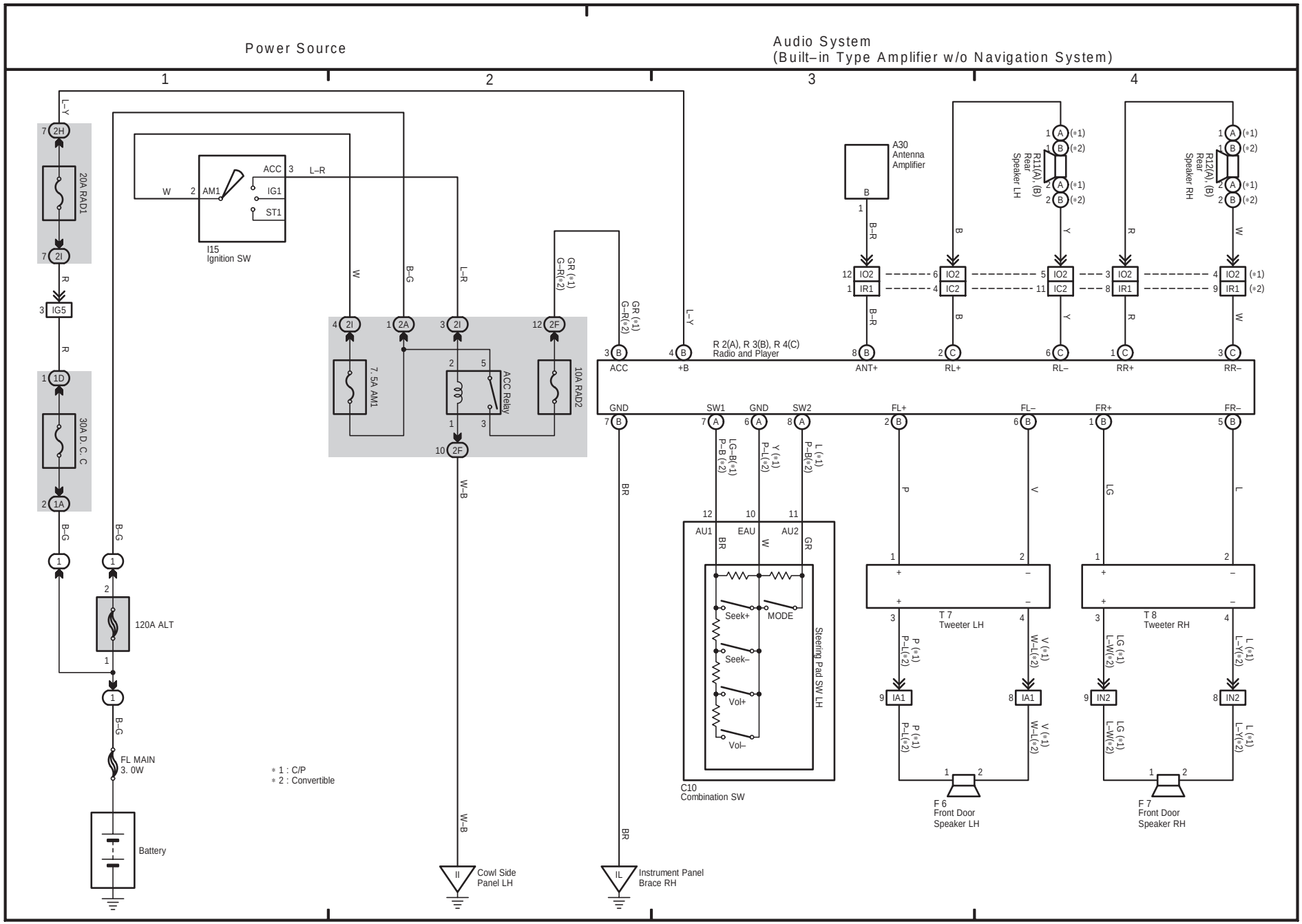

28 CAMRY SOLARA

(Cont. next page)

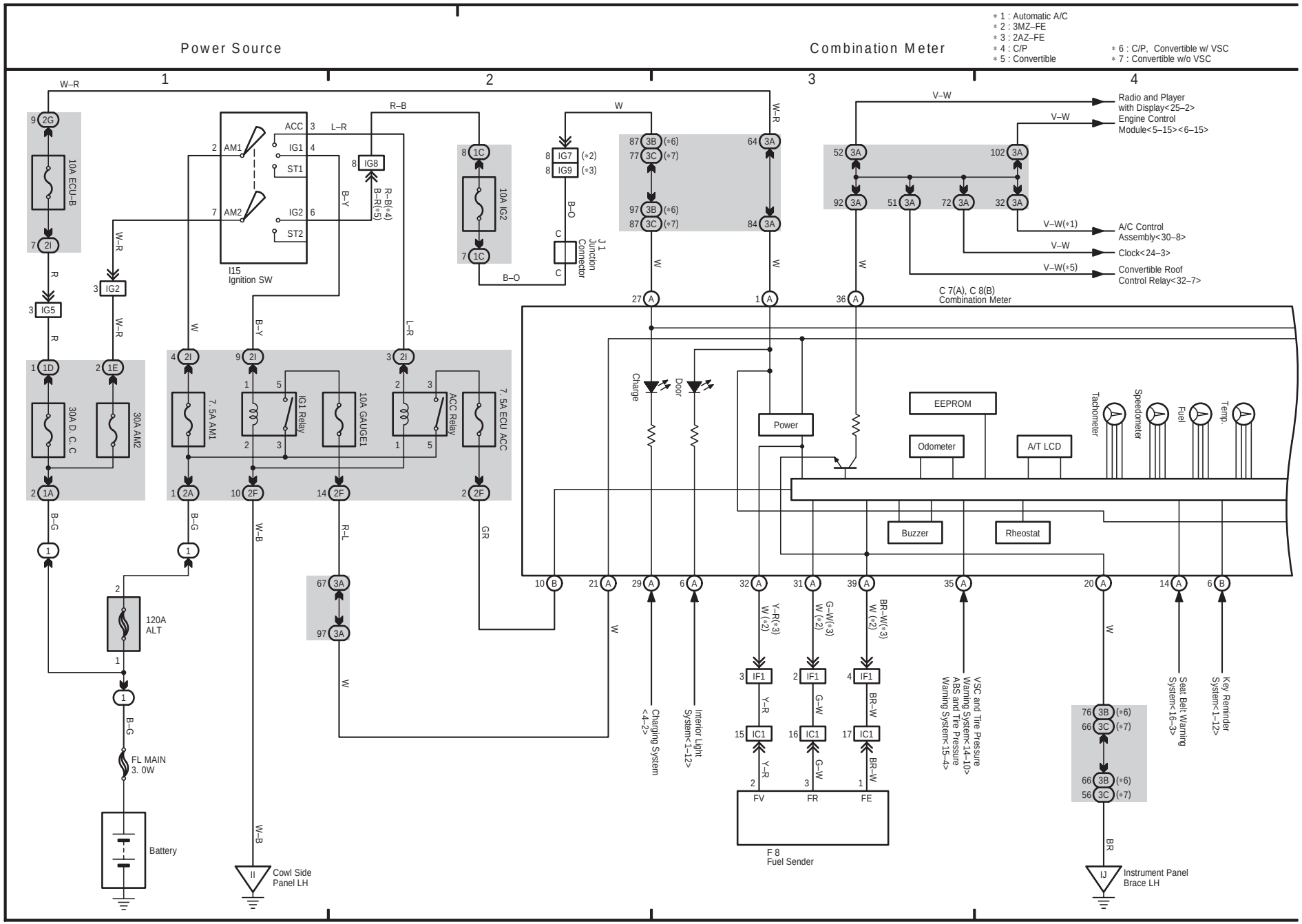

(Cont. next page)

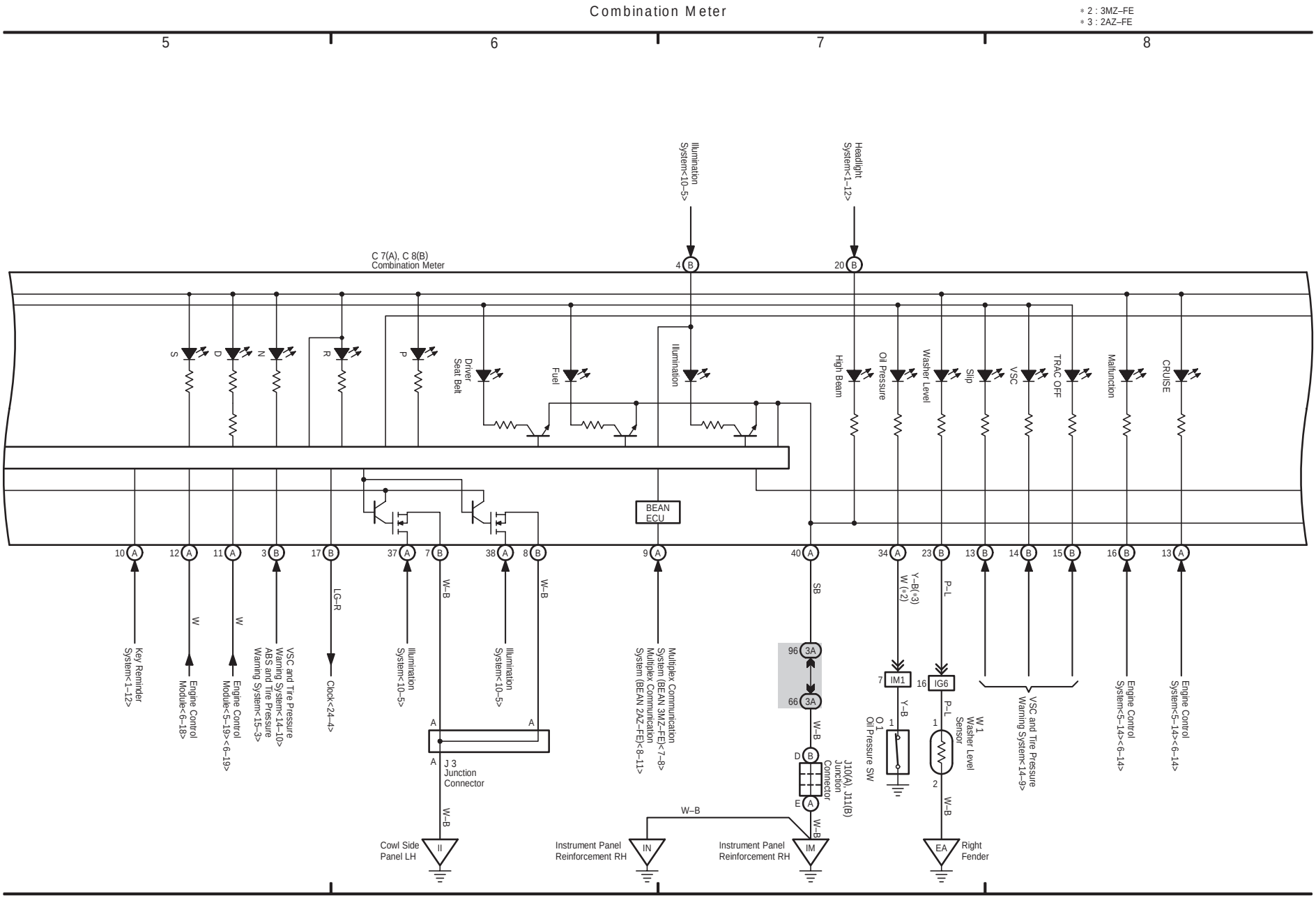

28 CAMRY SOLARA (Cont' d)

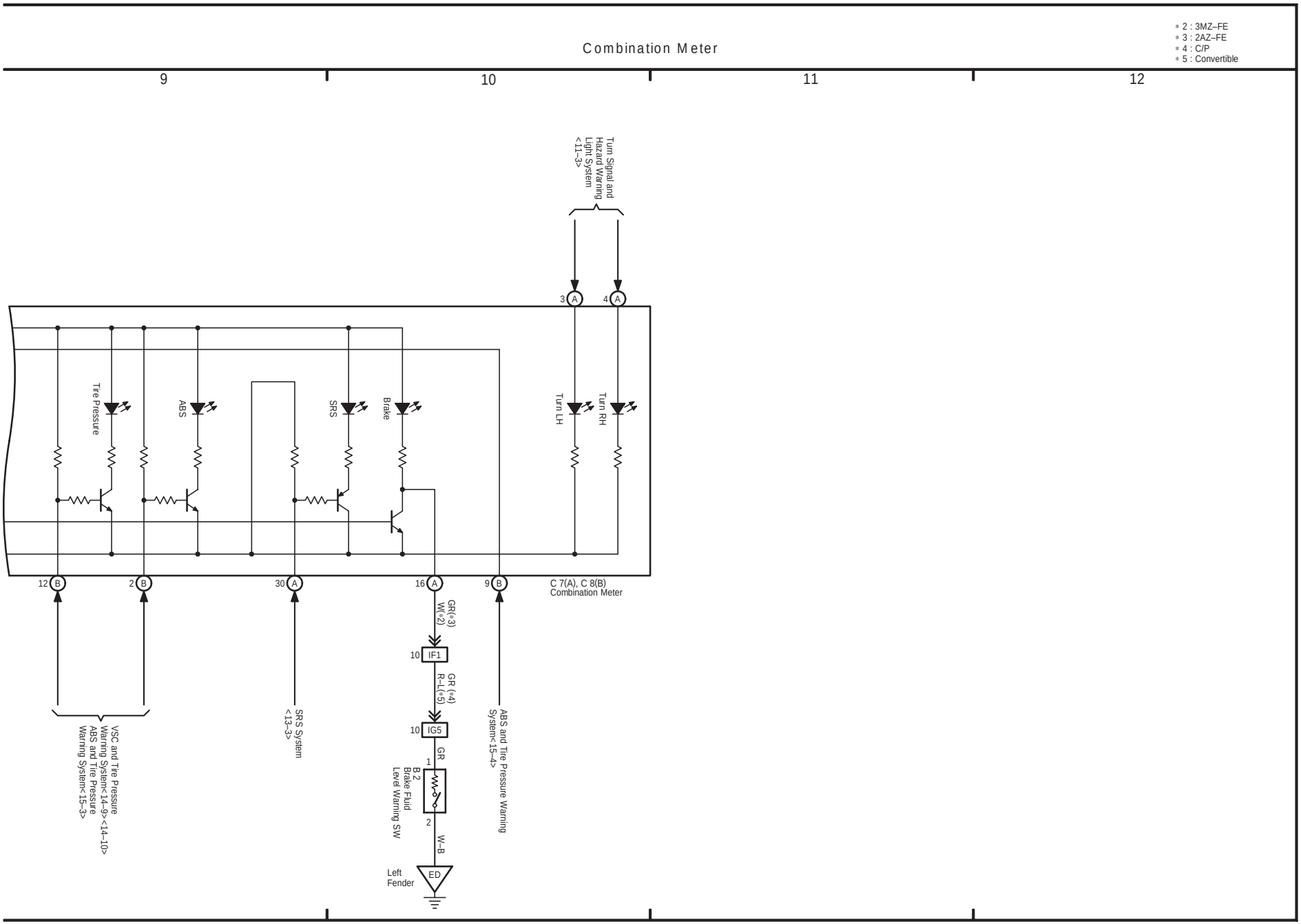

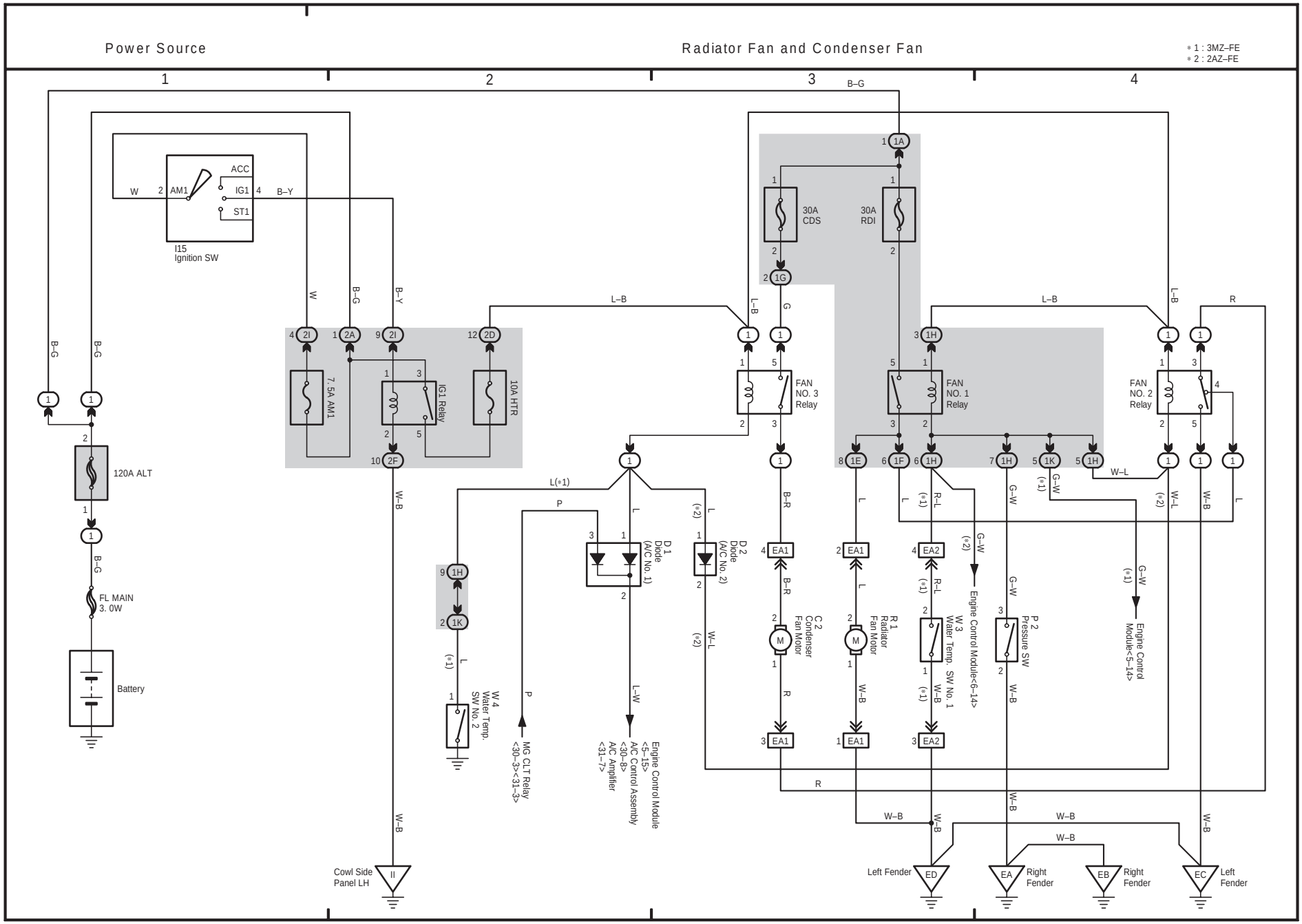
Power Source
Radiator Fan and Condenser Fan
* 1 : 3MZ–FE
* 2 : 2AZ–FE
I15
Ignition SW
ACC
IG1
ST1
AM1
7. 5A AM1
IG1 Relay
10A HTR
120A ALT
FL MAIN
3. 0W
Battery
30A
CDS
30A
RDI
FAN
NO. 3
Relay
FAN
NO. 1
Relay
FAN
NO. 2
Relay
D 1
Diode
(A/C No. 1)
D 2
Diode
(A/C No. 2)
C 2
Condenser
Fan Motor
R 1
Radiator
Fan Motor
W 3
Water Temp. SW No. 1
P 2
Pressure SW
W 4
Water Temp.
SW No. 2
Engine Control Module<6–14>
Engine Control
Module<5–14>
MG CLT Relay
<30–3><31–3>
Engine Control Module
<5–15>
A/C Control Assembly
<30–8>
A/C Amplifier
<31–7>
Cowl Side
Panel LH
Left Fender
Right
Fender
Right
Fender
Left
Fender

30 CAMRY SOLARA

(Cont. next page)

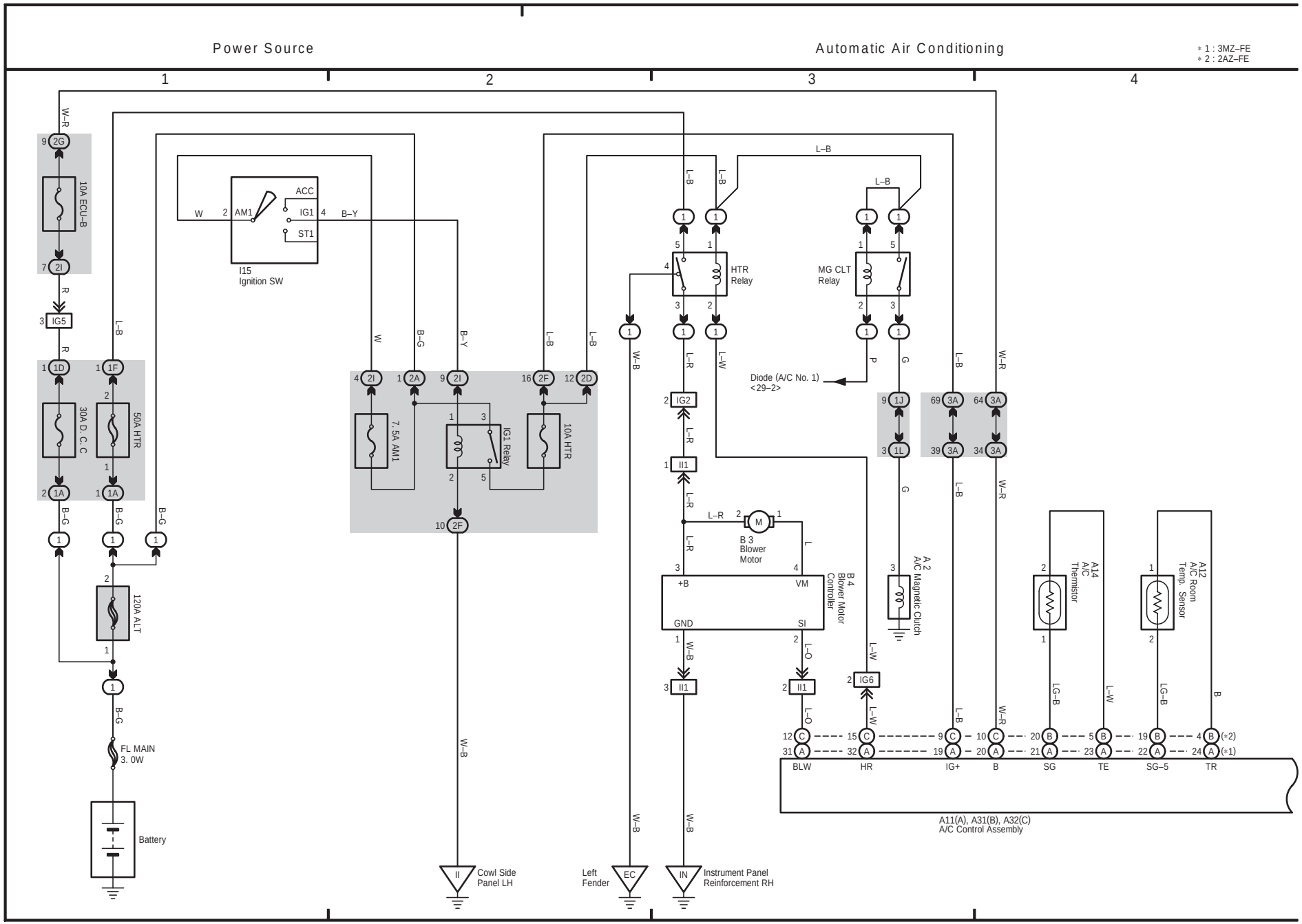

(Cont. next page)

Automatic Air Conditioning

* 1 : 3MZ–FE
* 2 : 2AZ–FE

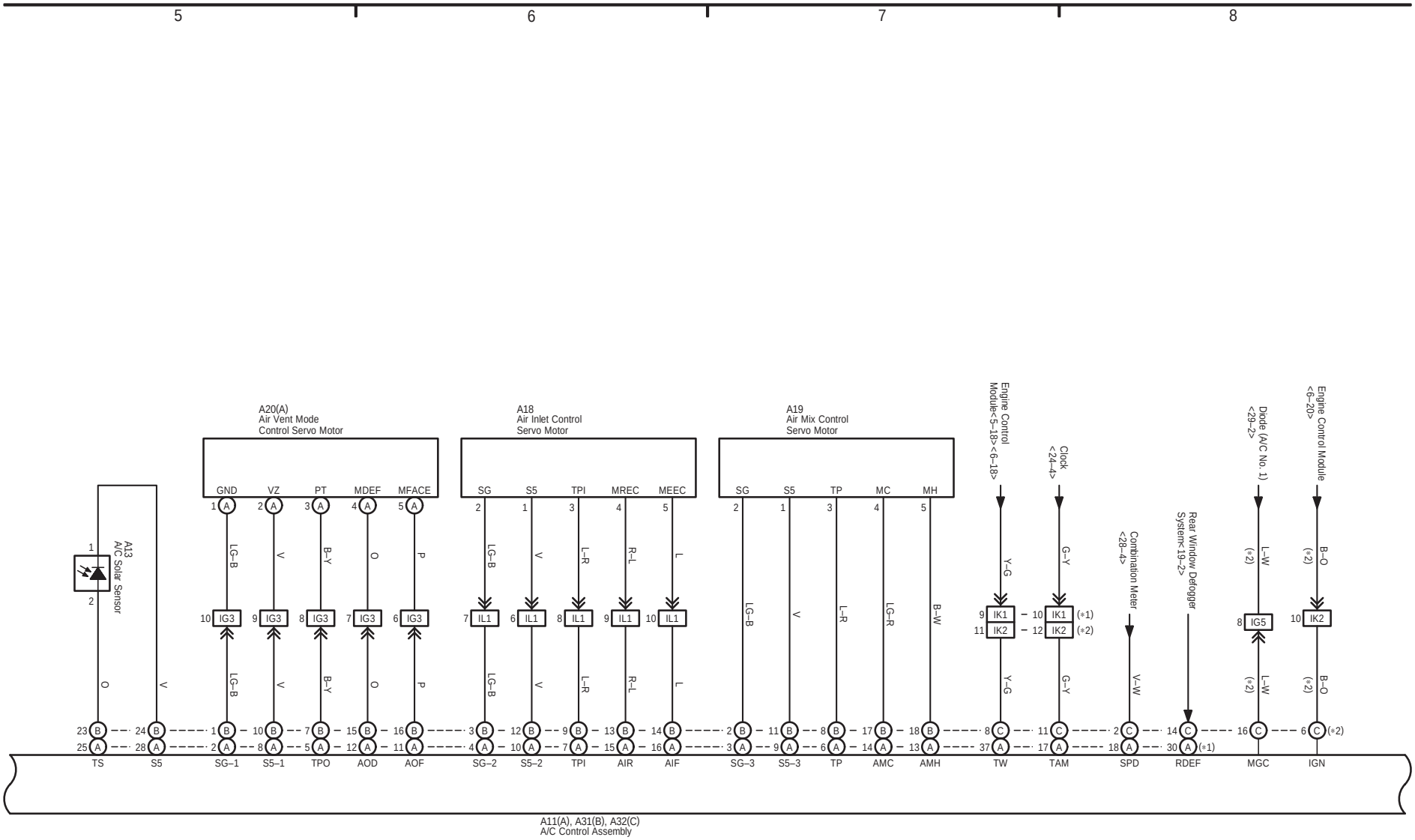

30 CAMRY SOLARA (Cont' d)

Automatic Air Conditioning

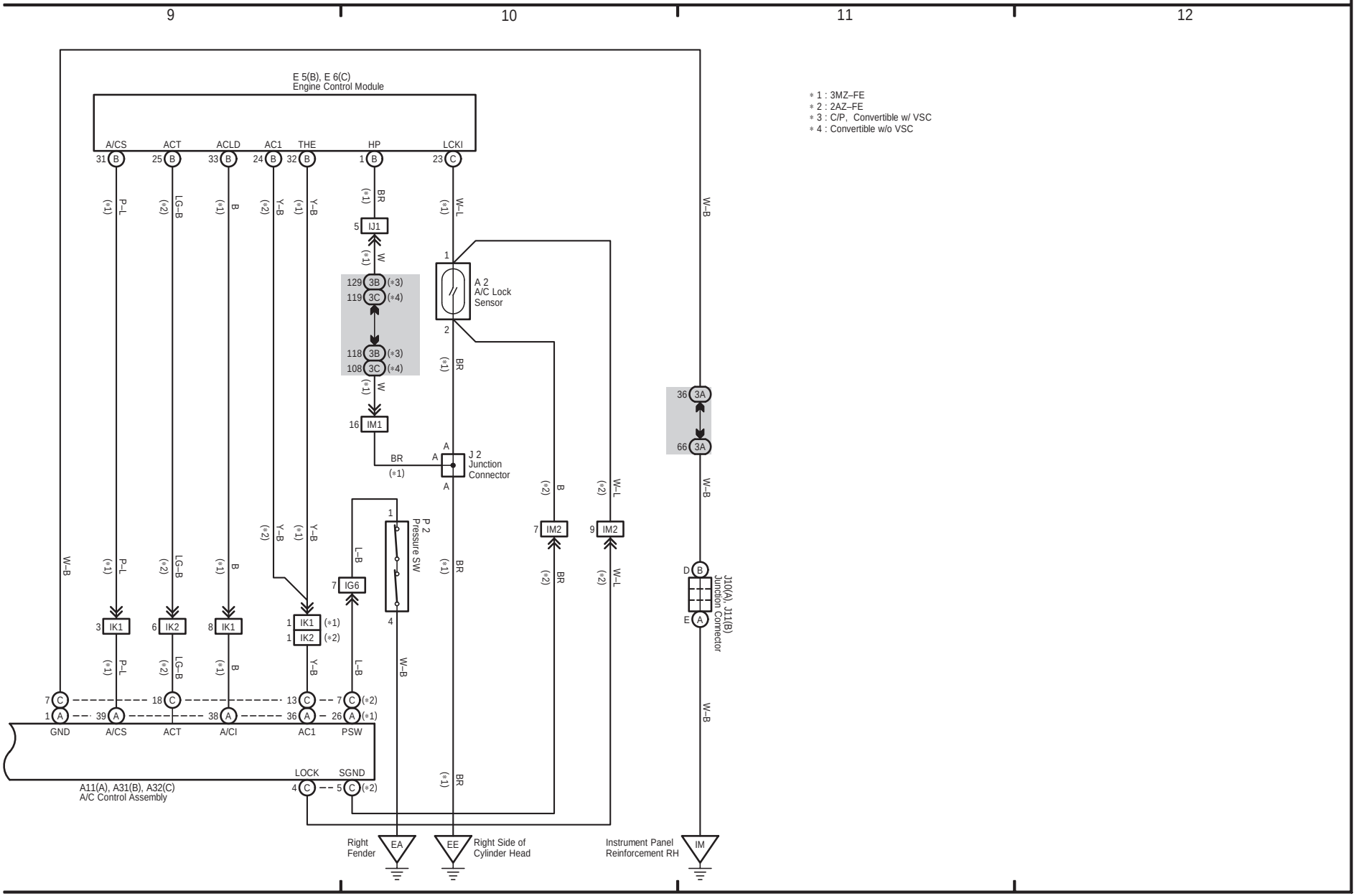

31 CAMRY SOLARA

(Cont. next page)

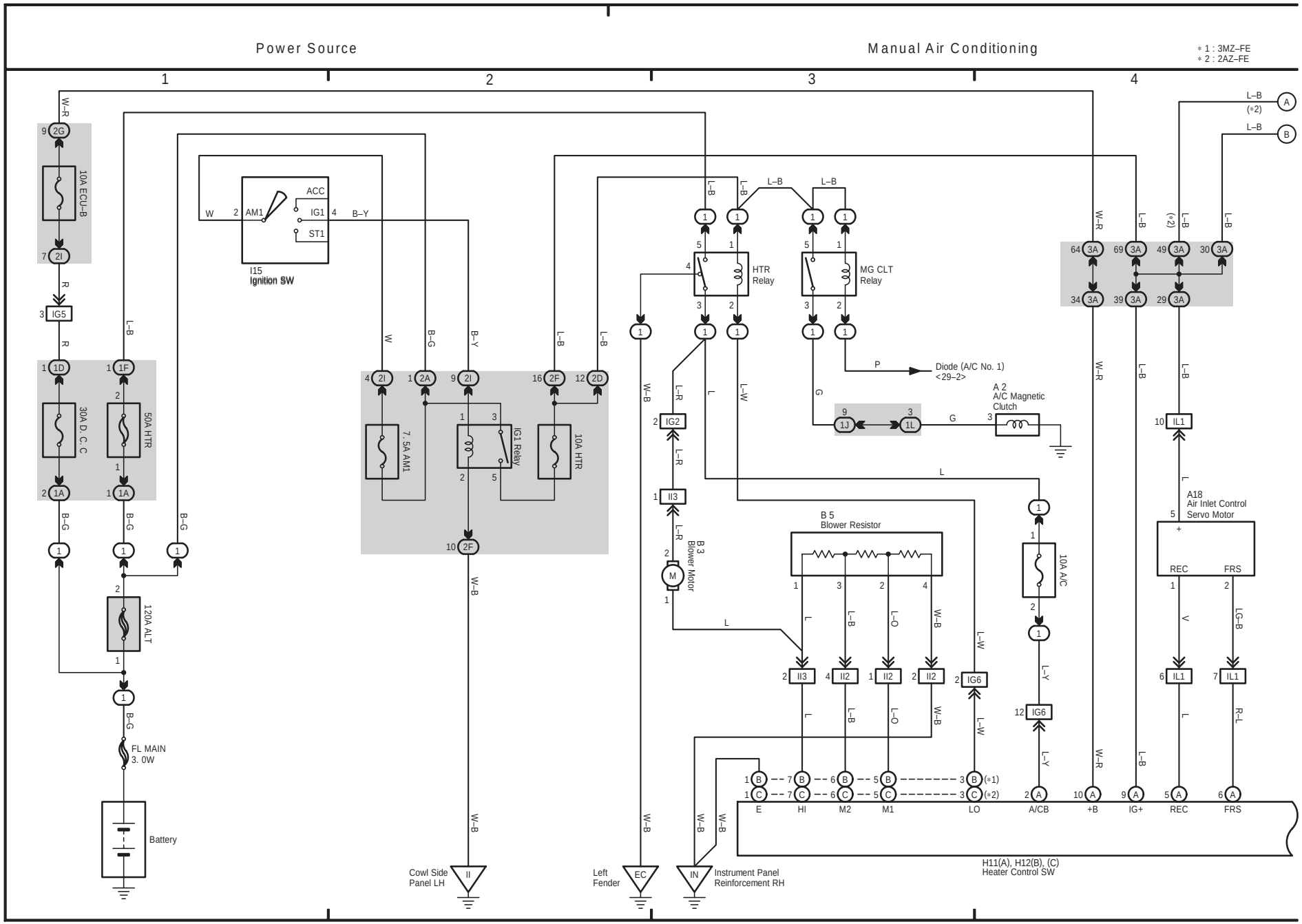

(Cont. next page)

Manual Air Conditioning

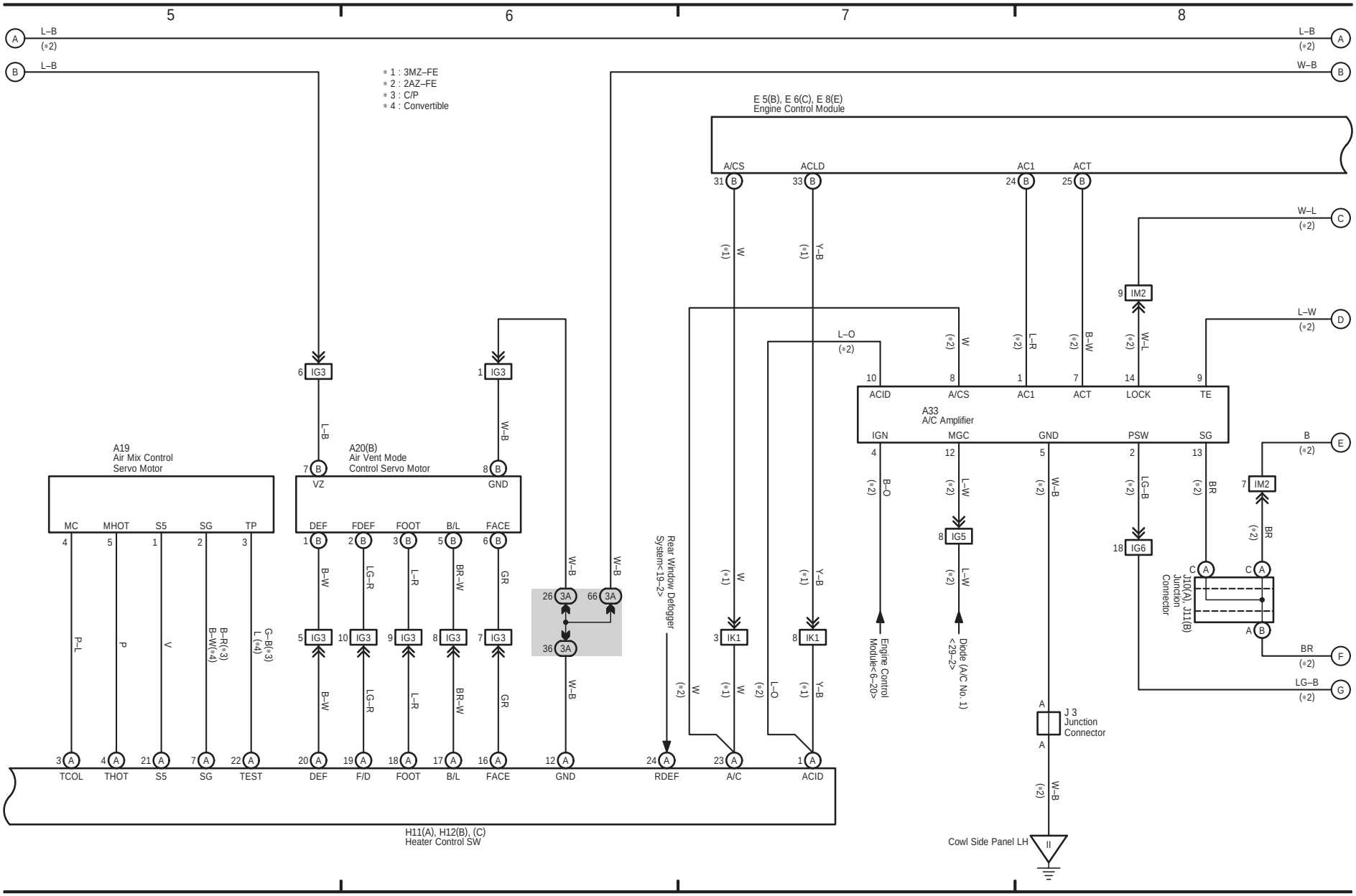

31 CAMRY SOLARA (Cont' d)

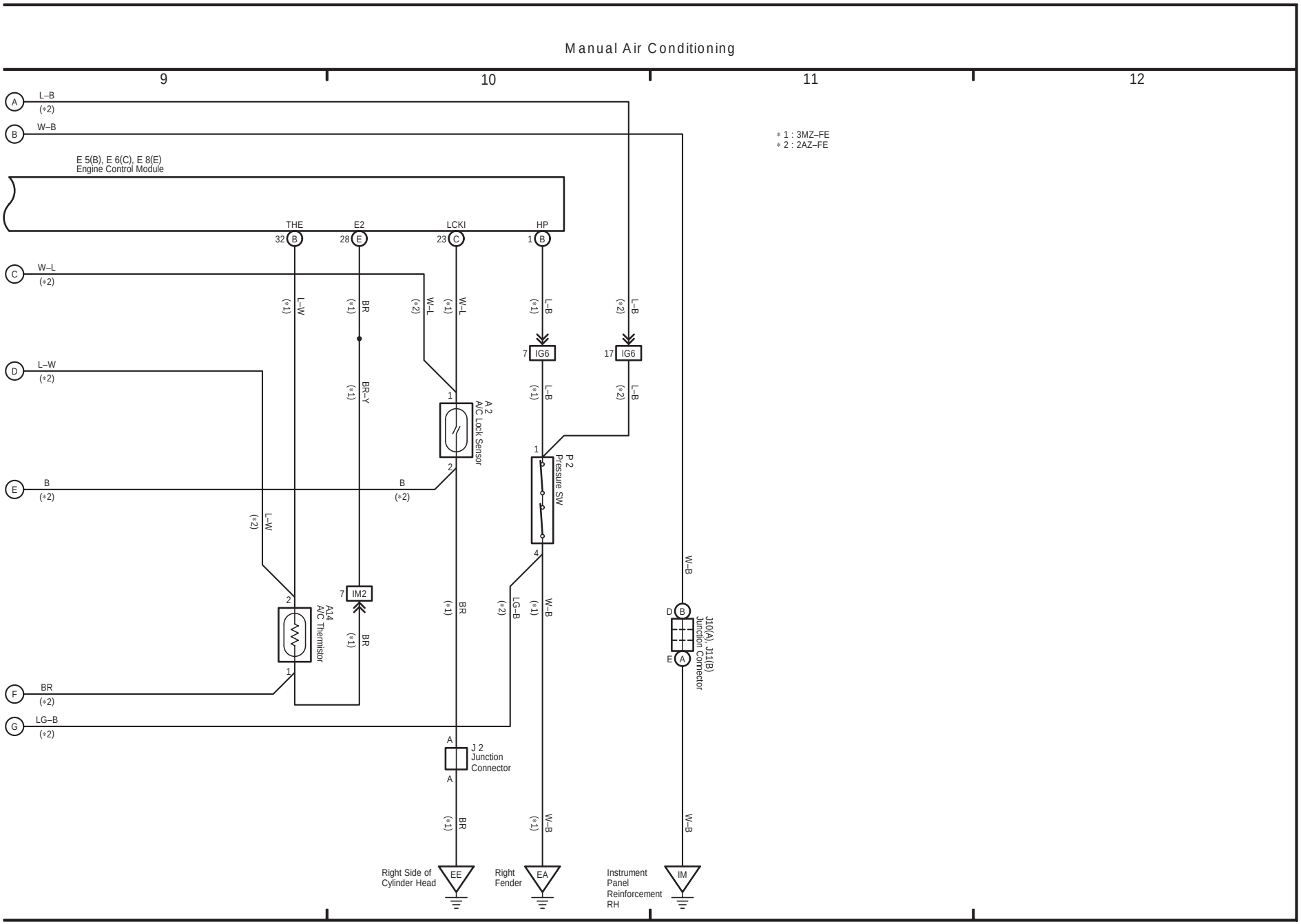

32 CAMRY SOLARA

(Cont. next page)

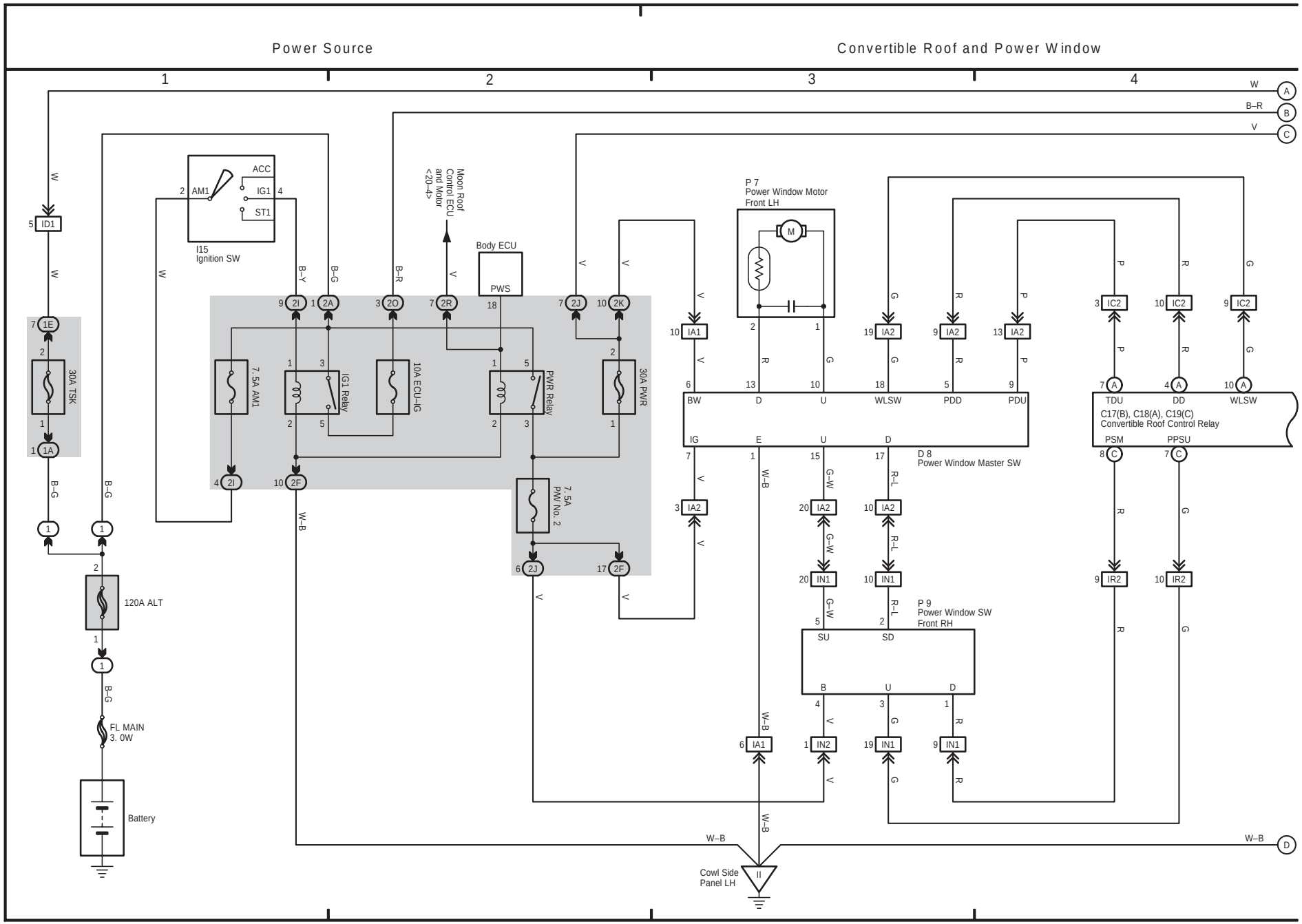

Convertible Roof and Power Window

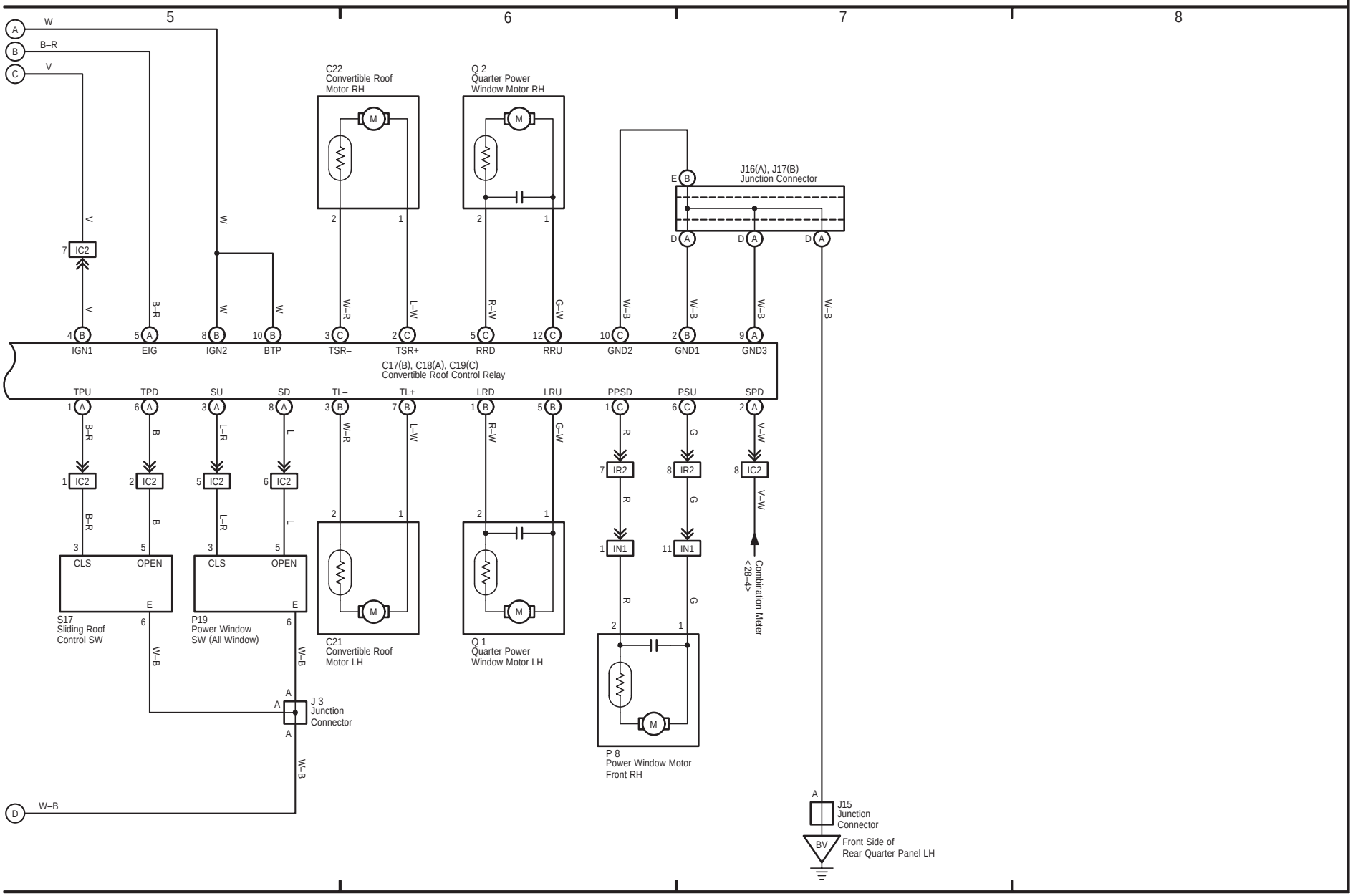

HOW TO READ THIS SECTION

* The system shown here is an EXAMPLE ONLY. It is different to the actual circuit shown in the wiring diagram section.

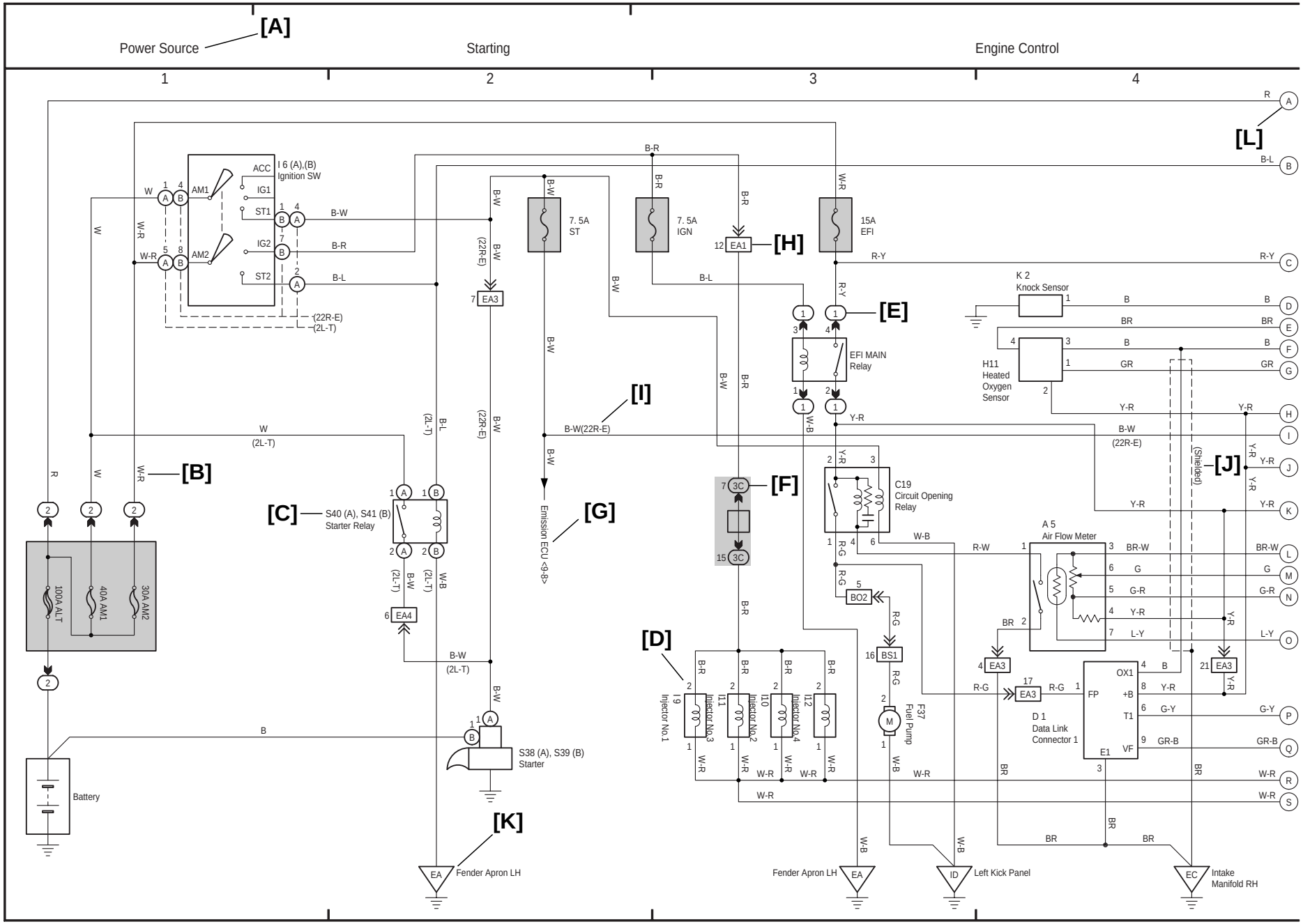

[A] : System Title

[B] : Indicates the wiring color.

Wire colors are indicated by an alphabetical code.

B = Black	W = White	BR = Brown
L = Blue	V = Violet	SB = Sky Blue
R = Red	G = Green	LG = Light Green
P = Pink	Y = Yellow	GR = Gray
O = Orange		

The first letter indicates the basic wire color and the second letter indicates the color of the stripe.

Example: L – Y

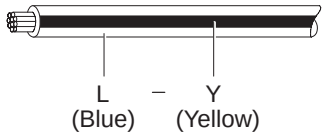

[C] : The position of the parts is the same as shown in the wiring diagram and wire routing.

[D] : Indicates the pin number of the connector. The numbering system is different for female and male connectors.

Example : Numbered in order from upper left to lower right — Numbered in order from upper right to lower left

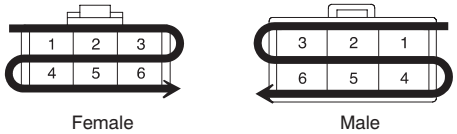

The numbering system for the overall wiring diagram is the same as above

[E] : Indicates a Relay Block. No shading is used and only the Relay Block No. is shown to distinguish it from the J/B.

Example : (1) Indicates Relay Block No.1

[F] : Junction Block (The number in the circle is the J/B No. and the connector code is shown beside it). Junction Blocks are shaded to clearly separate them from other parts.

Example:

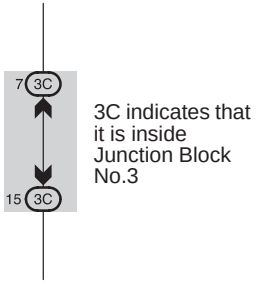

[G] : Indicates related system.

[H] : Indicates the wiring harness and wiring harness connector. The wiring harness with male terminal is shown with arrows (⩔). Outside numerals are pin numbers.

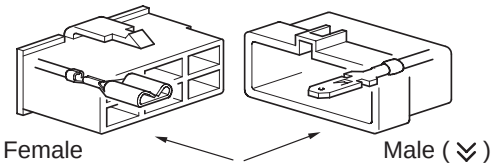

[I] : ( ) is used to indicate different wiring and connector, etc. when the vehicle model, engine type, or specification is different.

[J] : Indicates a shielded cable.

[K] : Indicates and located on ground point.

[L] : The same code occuring on the next page indicates that the wire harness is continuous.

SYSTEM INDEX

SYSTEMS	LOCATION
ABS	15–2
Audio System (Built–in Type Amplifier w/o Navigation System)	27–3
Audio System (Separate Type Amplifier w/o Navigation System)	26–2
Audio System (Separate Type Amplifier w/ Navigation System)	25–2
Automatic Air Conditioning	30–3
Automatic Glare–Resistant EC Mirror with Compass	20–2
Automatic Light Control	1–8
Back–Up Light	12–2
Charging	4–2
Clock	24–2
Combination Meter	28–2
Convertible Roof	32–3
Cruise Control (2AZ–FE)	6–17
Cruise Control (3MZ–FE)	5–17
Door Lock Control	1–17
Electronically Controlled Transmission and A/T Indicator (2AZ–FE)	8–2
Electronically Controlled Transmission and A/T Indicator (3MZ–FE)	7–2
Engine Control (2AZ–FE)	6–8
Engine Control (3MZ–FE)	5–8
Engine Immobiliser System (2AZ–FE)	6–3
Engine Immobiliser System (3MZ–FE)	5–3
Fog Light	1–2
Garage Door Opener	1–9
Headlight	1–6
Horn	16–4
Ignition (2AZ–FE)	3–2
Ignition (3MZ–FE)	2–2
Illumination	10–2
Interior Light	1–9
Key Reminder	1–12

SYSTEMS	LOCATION
Light Auto Turn Off System	1–6
Manual Air Conditioning	31–3
Mirror Heater	19–4
Moon Roof	20–4
Multiplex Communication System (BEAN) (2AZ–FE)	8–11
Multiplex Communication System (BEAN) (3MZ–FE)	7–8
Multiplex Communication System (CAN) (2AZ–FE)	8–13
Multiplex Communication System (CAN) (3MZ–FE)	14–11
Navigation System	25–2
Power Outlet	22–2
Power Seat	23–2
Power Source	1~32–1
Power Window (Coupe)	17–2
Power Window (Convertible)	32–3
Radiator Fan and Condenser Fan	29–2
Rear Window Defogger	19–2
Remote Control Mirror	18–3
Seat Belt Warning	16–2
Seat Heater	22–4
Shift Lock	22–3
SRS	13–2
Starting (2AZ–FE)	3–2
Starting (3MZ–FE)	2–2
Stop Light	9–3
Taillight	9–2
Theft Deterrent	1–15
Tire Pressure Warning System (ABS)	15–2
Tire Pressure Warning System (VSC)	14–2
Turn Signal and Hazard Warning Light	11–2
VSC	14–2
Wiper and Washer	21–3
Wireless Door Lock Control	1–13